Department of Veterans Affairs

Journal of Rehabilitation Research and Development Vol. 37 No. 2, March/April 2000
Pages 217–224

Tendon and ligament adaptation to exercise, immobilization, and remobilization

Tishya A. L. Wren, PhD; Gary S. Beaupré, PhD; Dennis R. Carter, PhD
Rehabilitation Research and Development Center, Veterans Affairs Health Care System, Palo Alto, CA; Biomechanical Engineering Division, Mechanical Engineering Department, Stanford University, Stanford, CA.

Abstract—This study provides a theoretical and computational basis for understanding and predicting how tendons and ligaments adapt to exercise, immobilization, and remobilization. In a previous study, we introduced a model that described the growth and development of tendons and ligaments. In this study, we use the same model to predict changes in the cross-sectional area, modulus, and strength of tendons and ligaments due to increased or decreased loading. The model predictions are consistent with the results of experimental exercise and immobilization studies performed by other investigators. These results suggest that the same fundamental principles guide both development and adaptation. A basic understanding of these principles can contribute both to prevention of tendon and ligament injuries and to more effective rehabilitation when injury does occur.

Keywords: *adaptation, exercise, immobilization, ligament, mechanobiology, tendon.*

This material is based upon work supported by the Veterans Administration Rehabilitation Research and Development Program, Washington, DC 20420.

Address all correspondence and requests for reprints to: Tishya Wren, Rehabilitation Research and Development Center, Palo Alto Veterans Affairs Health Care System (153), 3801 Miranda Avenue, Palo Alto, CA 94304; email: wren@stanford.edu

INTRODUCTION

Hard and soft skeletal connective tissues adapt in response to mechanical loading. This adaptation allows the tissues to withstand the mechanical loads imposed on them during normal activities of daily living. While numerous computational and theoretical studies have examined the functional adaptation of bone (1–5), few analytical studies have considered the adaptation of soft tissues such as tendons and ligaments. In a previous study (6), we introduced a computational model relating changes in the geometric and material properties of tendons and ligaments to biological and mechanobiological influences. In this paper, we use the same model to predict the response of tendons and ligaments to increased or decreased loading experienced during exercise, immobilization, and remobilization.

A number of experimental studies have examined the effects of exercise, immobilization, and remobilization on tendons and ligaments. Experimental exercise studies have compared the biochemical composition and mechanical properties of tendons and ligaments from exercised animals with those from sedentary controls. The exercised animals undergo a prescribed regimen of running exercises, while the control animals engage in normal cage activ-

ity. In some cases, exercise of mature animals leads to increases in tendon weight, cross-sectional area, collagen content, modulus, and strength (7,8). In other cases, exercise has no effect on these properties (9,10). Similarly, exercise before maturity may lead to an increase in mature tendon weight (7), or it may not affect mature tendon weight (11–13). These inconsistencies may stem from differences in the magnitude of loading applied to various structures during general exercise programs (14).

Immobilization studies have compared the biochemical composition and mechanical properties of tendons and ligaments subject to reduced loading with those from controls experiencing normal loading. Various procedures have been used to reduce the loading, including ankle disarticulation (15), cast immobilization (16,17), and internal fixation (18,19). In mature animals, immobilization does not lead to changes in the weight or collagen content of tendons and ligaments (15,17,19,20) despite increased collagen turnover (18,20,21). Cross-sectional area may decrease (21), as do modulus, strength, and stiffness (16,19,20). With remobilization, tendons and ligaments recover their structural and material properties (21,22). In growing animals, Walsh and colleagues found that immobilized ligaments fail to increase in dry weight, show less increase in cross-sectional area than controls, and decrease in stiffness below the level attained prior to immobilization (23,24). Immobilization clearly affects the properties of tendons and ligaments, although normal properties are recovered when loading is restored.

While experimental studies have clearly shown that tendons and ligaments respond to exercise, immobilization, and remobilization, no theory has yet been established to explain these responses. This study attempts to establish such a theory. We apply a model used previously to describe tendon and ligament growth and development (6) to predict changes in the geometric and material properties of tendons and ligaments due to exercise, immobilization, and remobilization. The model predictions are compared with the results of experimental exercise and immobilization studies performed by other investigators, and implications for basic control mechanisms of tendon and ligament adaptation are discussed.

METHODS

Model Description

This section briefly describes the computational model used in this study. Development and details of the model have been described previously (6). The model tracks changes in the cross-sectional area, modulus, and strength of an idealized tendon or ligament. Changes in these properties are determined using a time-dependent algorithm that takes into account *biological* influences, which represent a baseline level of growth and development dependent on age but not affected by mechanical loading, and *mechanobiological* influences, which represent effects associated with mechanical loading. **Figure 1** presents a flow chart for the algorithm.

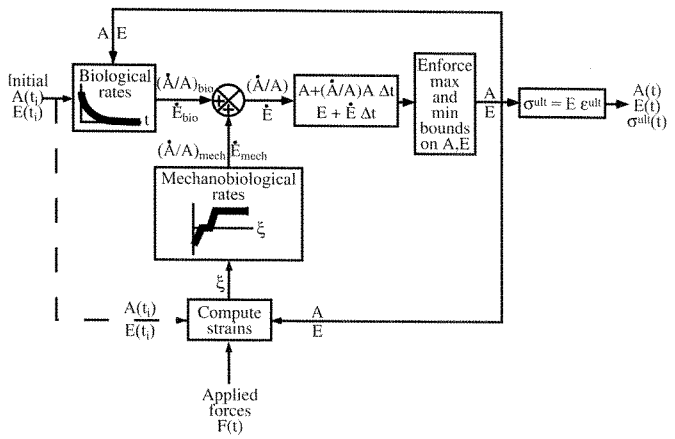

Figure 1.
Flow chart for the algorithm used in the simulations. A, cross-sectional area; E, modulus; $(\dot{A}/A)$, total specific rate of cross-sectional area change; $\dot{E}$, total rate of modulus change; $(\dot{A}/A)_{bio}$, biological component of specific rate of cross-sectional area change; $\dot{E}_{bio}$, biological component of rate of modulus change; $(\dot{A}/A)_{mech}$, mechanobiological component of specific rate of cross-sectional area change; $\dot{E}_{mech}$, mechanobiological component of rate of modulus change; σ, tendon/ligament stress; ε, tendon/ligament strain; ξ, daily strain stimulus; F, force; t, time.

An initial cross-sectional area A_i and modulus E_i are specified at an initial time $t=t_i$. Age and mechanical loading determine the rates at which these properties change. Given the age t in months, we compute the biological components of both the specific rate of cross-sectional area change

$$(\dot{A}/A)_{bio}(t) = (\dot{A}/A)_{bio}^{max} \exp(-t/\tau) \qquad [1]$$

and the rate of modulus change

$$\dot{E}_{bio}(t) = \dot{E}_{bio}^{max} \exp(-t/\tau), \qquad [2]$$

where τ is a time constant and $(\dot{A}/A)_{bio}^{max}$ and $\dot{E}_{bio}^{max}$ are scaling constants. To determine the mechanobiological compo-

nents, we specify the maximum force F exerted on the tendon or ligament during a period of time Δt. This force determines the tendon or ligament stress

$$\sigma = F/A, \qquad [3]$$

and, assuming a linear constitutive model as in our previous study, the associated strain

$$\varepsilon = \sigma/E. \qquad [4]$$

We determine a daily strain stimulus (25)

$$\xi = \left[\sum_{\text{day}} n_i \Delta\varepsilon_i^m\right]^{1/m}\Bigg|_{\text{per day}}, \qquad [5]$$

where n_i is the number of cycles of load type i, $\Delta\,\bar{\varepsilon}_i$ is the cyclic strain range of the energy equivalent strain for load type i, and m is an empirical constant. For simplicity, as in our previous study, we approximate this expression as

$$\xi = \varepsilon\,|_{\text{per day}} \qquad [6]$$

by assuming that the stimulus is dominated by a single load case and that it depends on load magnitude much more than number of loading cycles. Given the daily strain stimulus, we use the curves in **Figure 2** to determine the mechanobiological components of both the specific rate of cross-sectional area change $(\dot{A}/A)_{mech}(\xi)$ and of the rate of modulus change $\dot{E}_{mech}(\xi)$. These curves represent an adaptation rule that attempts to maintain strain stimulus values of 1.5–3 percent/day associated with tensile strains of 1.5–3 percent. Normal, physiological tendon and ligament strains are in this approximate range (26, 27), and the literature suggests physiological and failure strains remain relatively constant between different tendons and ligaments, across species, and with age (16,19,26–28).

Once the biological and mechanobiological components have been determined, they sum to give the total specific rate of area change

$$(\dot{A}/A) = (\dot{A}/A)_{bio}(t) + (\dot{A}/A)_{mech}(\xi) \qquad [7]$$

and the total rate of modulus change

$$\dot{E} = \dot{E}_{bio}(t) + \dot{E}_{mech}(\xi). \qquad [8]$$

These rates are used to update the area and modulus,

$$A_{t+\Delta t} = A_t + (\dot{A}_t/A_t)\,A_t\Delta_t \qquad [9]$$

and

$$E_{t+\Delta t} = E_t + \dot{E}_t\,\Delta t, \qquad [10]$$

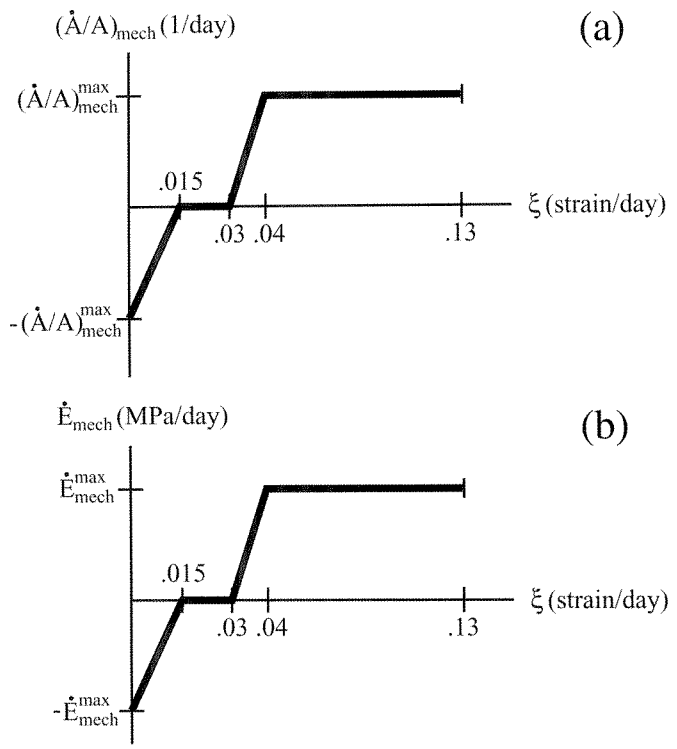

Figure 2.
Mechanobiological components of (a) the specific rate of cross-sectional area change and (b) the rate of modulus change. $(\dot{A}/A)_{mech}$, mechanobiological component of specific rate of cross-sectional area change; $(\dot{A}/A)^{max}_{mech}$, mechanobiological component of maximum specific rate of cross-sectional area change; $\dot{E}_{mech}$, mechanobiological component of rate of modulus change; $\dot{E}^{max}_{mech}$, mechanobiological component of rate of modulus change; ξ, daily strain stimulus.

respectively, with the restriction that the new values remain between specified upper and lower bounds. The upper bounds denote the maximum attainable cross-sectional area for a particular tendon or ligament and the maximum attainable modulus for the tissue comprising all tendons and ligaments. The lower bounds represent the growth that would occur in the complete absence of mechanical loading, that is, the growth contributed by the biological component alone.

Assuming a constant failure strain ε^{ult}, we compute the tendon or ligament strength

$$\sigma^{ult}_{t+\Delta t} = E_{t+\Delta t}\varepsilon^{ult}. \qquad [11]$$

We then use the updated area and modulus to begin the next iteration.

Model Application

To study the effects of exercise, immobilization, and remobilization, we applied the algorithm to development

of the rabbit Achilles tendon in four altered loading situations: exercise prior to maturity, exercise after maturity, immobilization and remobilization prior to maturity, and immobilization and remobilization after maturity. Normal growth and development was taken to be the control. In all cases, we used the parameter values listed in **Table 1**.

Table 1.
Parameter values used in the simulations.

Parameter	Value
τ	3 months
$(\dot{A}/A)^{max}_{bio}$	0.03/day
$\dot{E}^{max}_{bio}$	1 MPa/day
$(\dot{A}/A)^{max}_{bio}$	0.01/day
$\dot{E}^{max}_{mech}$	5 MPa/day
A^{max}	18 mm^2
E^{max}	1,500 MPa
ε^{ult}	13%
t_i	3 weeks
$A(t_i)$	2.8 mm^2
$E(t_i)$	281 MPa

For normal growth and development, we used the data of Gibb and Williams (29) to obtain the following relationship between body mass M measured in kg and the rabbit age t in mo,

$$M(t) = -2 \exp(-t/3.7) + 1.83. \quad [12]$$

We used this mass to estimate the force F applied to the tendon during normal growth and development (6)

$$F(t) = 133M(t), \quad [13]$$

where the force is measured in N and the mass in kg.

It is difficult to estimate the exact percentages by which exercise or immobilization changes the loading applied to a tendon or ligament. However, Walsh et al. (23) reported that immobilized limbs carried only 10 percent of the weight bearing force carried by control limbs at the end of the immobilization period. Therefore, to simulate immobilization, we decreased the applied loading to 10 percent of normal. For exercise, we increased the applied loading by 30 percent. Studies of treadmill locomotion have measured force increases of 9–39 percent in the combined soleus and medial gastrocnemius muscles of cats between walking and running (30,31).

The simulations followed time courses corresponding to those from particular experimental studies. For exercise, we increased the applied loads by 30 percent starting at the ages of 4.5 and 21 mo (0.5 and 2.3 times the maturation age of rabbits) for comparison with the experimental results of Woo et al. (8) and Ingelmark (7). For immobilization and remobilization, we decreased the applied forces to 10 percent of normal between the ages of 3 and 6 mo (0.3–0.7 times the maturation age of rabbits) for comparison with the findings of Walsh et al. (24) and between the ages of 21 and 24 mo (2.3–2.7 times the maturation age of rabbits) for comparison with the results of Woo et al. (21).

To compare the simulation results with the experimental data, which come from various tendons and ligaments of rabbits, mice, and swine, we normalized both the simulation results and the experimental data. We normalized animal age by an approximate maturation age for each animal, using 3 mo for mice (32), 9 mo for rabbits (28), and 24 mo for swine (33). We normalized the simulation results using the final values predicted for cross-sectional area, modulus, and strength during normal growth and development. We compared the experimental data with control values from the same study and then expressed them in terms of the simulation results for normal growth and development.

RESULTS

The results of our exercise simulations appear in **Figure 3,** along with experimental data from Woo et al. (8) and Ingelmark (7). For both the immature and mature cases, the simulations predict increases of approximately 14 percent in the tendon cross-sectional area, modulus, and strength. Although the experimental studies provide results only for time points at the beginning and end of the exercise periods, the simulation results are consistent with the available data.

The results of our immobilization and remobilization simulations appear in **Figure 4,** along with experimental data from Walsh et al. (24) and Woo et al. (21). For the mature case, the simulations predict a significant decrease in the area, modulus, and strength during immobilization and a reversal of these changes during remobilization. These trends reflect the changes observed by Woo et al. For the immature case, the simulations predict similar rapid losses of modulus and strength during immobilization. However, because the area encounters a biological lower bound that is increasing, the tendon area increases in the immature animal despite immobilization.

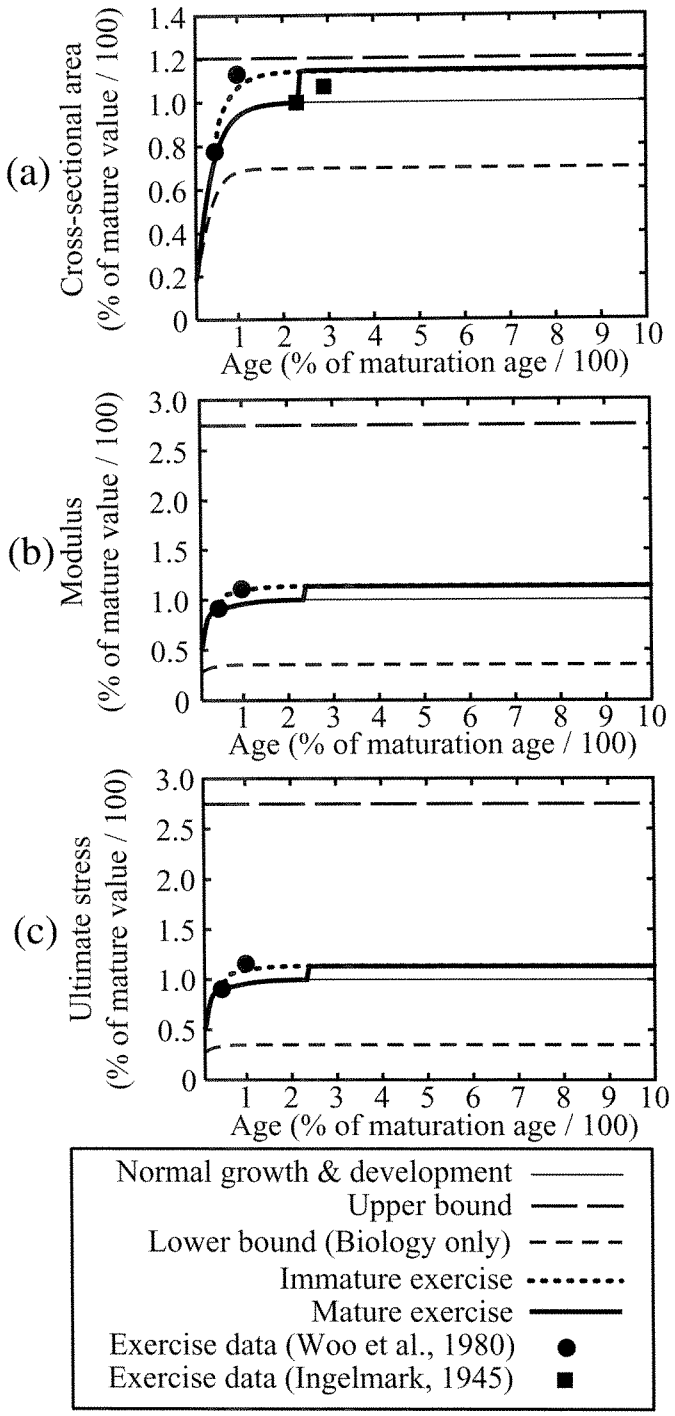

Figure 3.
Computational predictions and experimental data illustrating the effects of exercise on the tendon or ligament (a) cross-sectional area, (b) modulus, and (c) strength.

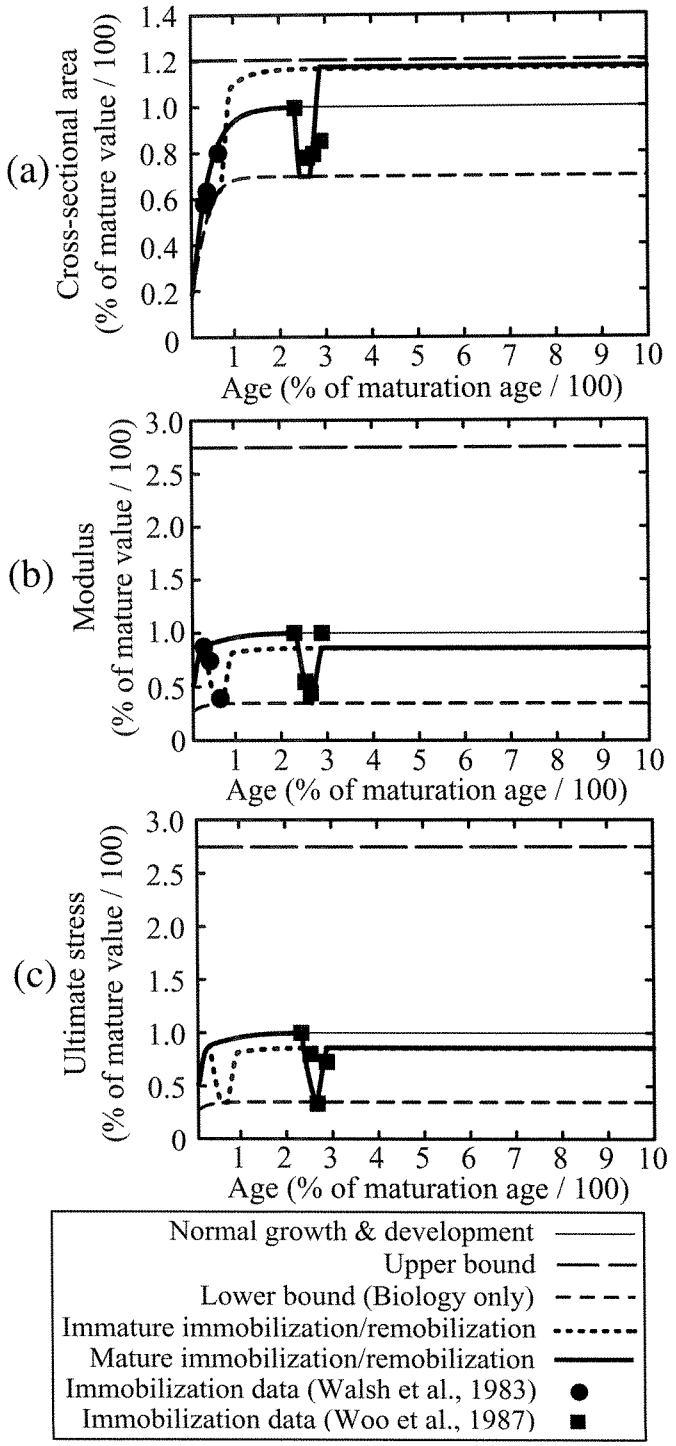

Figure 4.
Computational predictions and experimental data illustrating the effects of immobilization and remobilization on the tendon or ligament (a)cross-sectional area, (b) modulus, and (c) strength.

These predictions are consistent with the findings of Walsh et al. although the simulation predicts smaller increases in the cross-sectional area than were observed experimentally.

One feature of the simulation results has not been observed experimentally. Following remobilization, the simulations predict that the tendon reaches homeostasis with a larger cross-sectional area and lower modulus than results from normal development. This behavior arises because the area reaches its minimum before the modulus and therefore suffers less severe losses prior to remobilization. Since the area and modulus increase at the same rates during remobilization as during normal development in our model, the remobilized tendon acquires an increased cross-sectional area and decreased modulus.

Although the predictions for area and modulus differ between normal development and immobilization followed by remobilization, the same stiffness is predicted in these two situations. **Figure 5** illustrates the effects of exercise, immobilization, and remobilization on structural properties such as stiffness and failure force as predicted by our simulations. Taking normal growth and development as the control, the effects are essentially the same for the immature and mature cases. Exercise leads to a moderate increase in the stiffness and failure force. Immobilization leads to a significant decrease in these properties, which rapidly return to normal with remobilization. Woo and colleagues (21) have proposed similar exercise, immobilization, and remobilization effects for ligament structural properties based on their experimental studies. Our results corroborate the relationships they have proposed (**Figure 5**).

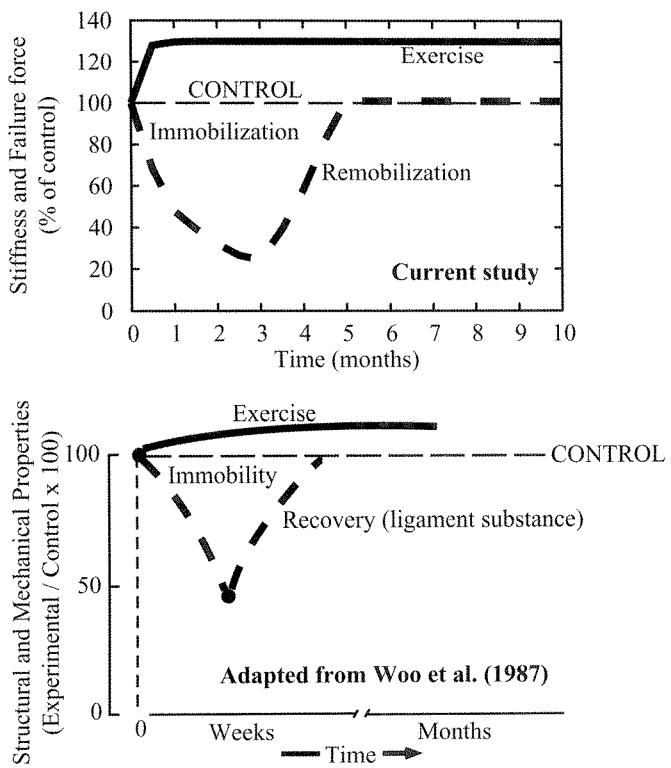

Figure 5.
Computational predictions of the effects of exercise, immobilization, and remobilization on tendon or ligament structural properties compared with the schematic proposed by Woo et al. (21).

DISCUSSION

In this investigation, we used a computational model to predict changes in the cross-sectional area, modulus, and strength of tendons and ligaments due to exercise, immobilization, and remobilization. Our approach provides a theoretical basis for understanding the experimental results reported by other investigators. In mature animals, immobilization causes a drastic decrease in the loading, and consequently the strain stimulus, experienced by a tendon or ligament. The reduced strain stimulus leads to a rapid loss of cross-sectional area, modulus, and strength. When loading is restored through remobilization, the strain stimulus is elevated and the properties rapidly recover as the immobilization effects are reversed. Exercise can also increase the strain stimulus, leading to increases in the geometric and material properties. Similar changes occur in immature animals, and the difference between immature and mature animals can be attributed to baseline biological growth that occurs independently from mechanical loading. Strains are therefore a likely stimulus for controlling tendon and ligament adaptation both before and after maturity.

This study used a simplified version of the strain stimulus, taking into account only the peak magnitude of cyclic loading. Previous investigations have shown that load magnitude affects bone remodeling more than the number of loading cycles (34). However, similar studies have not been performed for tendons and ligaments. To improve our understanding of the relationship between tendon and ligament adaptation and cyclic tensile strains, more experimental data are clearly needed. Load magnitudes and number of loading cycles must be better characterized, and cross-sectional area, modulus, and failure stress need to be measured at intermediate time points during exercise and immobilization/remobilization studies. The studies must also cover a sufficient period of time for the tendon or ligament to

achieve homeostasis. Our simulation results can guide the design of future experimental studies, which in turn will allow refinement of the computational model.

While our model suggests that strains are a likely stimulus for tendon and ligament adaptation, it does not address the cellular mechanisms through which the adaptation occurs. The mechanical properties of tendons and ligaments are determined by microstructural parameters including collagen fiber content, fiber orientations, and cross-link density (35). Fibroblasts change these parameters through altered biosynthetic activity stimulated by mechanical loading. Cyclic tensile strains stimulate an up-regulation of type I collagen production (36) and alignment of the collagen fibers in directions of principle tensile strain (37, 38). Removal of loading leads to degradation of the extra-cellular matrix (39) and disruption of collagen fiber alignment (22) and cross-linking (18). A full understanding of tendon and ligament adaptation requires insight into both the initial mechanical stimulus and the cellular response to that stimulus. This study addressed the first of these two issues.

The mechanical properties most important to tendon and ligament function are structural properties such as stiffness and failure force. Changes in structural properties reflect both geometric and material property changes. Tendons and ligaments can therefore adapt to increased or decreased mechanical loading by adjusting their size, their material properties, or both. Our model takes into account changes in cross-sectional area, a geometric property, and changes in modulus, a material property. Both cross-sectional area and modulus change in response to exercise, immobilization, and remobilization.

This study of tendon and ligament adaptation used the same theoretical framework as our previous study on tendon and ligament growth and development. In the current study, we applied the relationships and parameter values used previously to describe growth and development to predict the response of tendons and ligaments to exercise, immobilization, and remobilization. By changing only the magnitude of the applied loading, we obtained predictions consistent with the results of experimental exercise and immobilization studies. These results suggest that the principles underlying growth and development also guide the functional adaptation of tendons and ligaments. Further examination of the relationships between basic biology, mechanical loading, and functional adaptation will be assisted by analytical approaches such as those introduced in this study.

ACKNOWLEDGEMENTS

We would like to thank Dr. Vincent R. Hentz, Dr. Eric Sabelman, Dr. R. Lane Smith, and Dr. David Schurman for their helpful suggestions.

REFERENCES

1. Beaupré GS, Orr TE, Carter DR. An approach for time-dependent bone modeling and remodeling–Application: A preliminary remodeling simulation. J Orthop Res 1990;8:662–70.
2. Carter DR. Mechanical loading history and skeletal biology. J Biomech 1987;20:1095–109.
3. Cowin SC, Hegedus DH. Bone remodeling I: A theory of adaptive elasticity. J Elasticity 1976;6:313–26.
4. Hart RT, Davy DT. Theories of bone modeling and remodeling. In: Cowin SC, ed. Bone mechanics. Boca Raton: CRC Press; 1989. p. 253–77.
5. Huiskes R, Weinans H, Grootenboer HJ, Dalstra M, Fudala B, Sloff TJ. Adaptive bone-remodeling theory applied to prosthetic-design analysis. J Biomech 1987;20:1135–150.
6. Wren TAL, Beaupré GS, Carter DR. A model for loading-dependent growth, development, and adaptation of tendons and ligaments. J Biomech 1998;31:107–14.
7. Ingelmark BE. Über den Bau der Sehnen während verschiedener Altersperioden und unter verschiedenen funktionellen Bedingungen. Eine Untersuchung der distalen Sehnen des Musculus biceps brachii und Musculus semitendineus des Menschen sowie der Achillessehnen von Kaninchen und weissen Mausen. Uppsala LäkFören Förhandl 1945;50:357–95.
8. Woo SL-Y, Ritter MA, Amiel D, Sanders TM, Gomez MA, Kuei SC, Garfin SR, Akeson WH. The biomechanical and biochemical properties of swine tendons–Long term effects of exercise on the digital extensors. Connect Tissue Res 1980;7:177–83.
9. Woo SL-Y, Gomez MA, Amiel D, Ritter MA, Gelberman RH, Akeson WH. The effects of exercise on the biomechanical and biochemical properties of swine digital flexor tendons. J Biomech Eng 1981;103:51–6.
10. Vailas AC, Pedrini VA, Pedrini-Mille A, Holloszy JO. Patellar tendon matrix changes associated with aging and voluntary exercise. J Appl Physiol 1985;58:1572–6.
11. Suominen H, Kiiskinen A, Heikkinen E. Effects of physical training on metabolism of connective tissues in young mice. Acta Physiol Scand 1980;108:17–22.
12. Curwin SL, Vailas AC, Wood J. Immature tendon adaptation to strenuous exercise. J Appl Physiol 1988;65:2297–301.
13. Kiiskinen A. Physical training and connective tissues in young mice–physical properties of achilles tendons and long bones. Growth 1977;41:123–37.
14. Tipton CM, Vailas AC, Matthes RD. Experimental studies on the influences of physical activity on ligaments, tendons and joints: A brief review. Acta Med Scand 1986;Suppl 711:157–68.
15. Klein L, Heiple KG, Torzilli PA, Goldberg VM, Burstein AH. Prevention of ligament and meniscus atrophy by active joint motion in a non-weight-bearing model. J Orthop Res 1989;7:80–5.

16. Noyes FR. Functional properties of knee ligaments and alterations induced by immobilization. A correlative biomechanical and histological study in primates. Clin Orthop 1977;123:210–42.
17. Karpakka J, Vaananen K, Virtanen P, Savolainen J, Orava S, Takala TES. The effects of remobilization and exercise on collagen biosynthesis in rat tendon. Acta Physiol Scand 1990;139:139–45.
18. Harwood FL, Amiel D. Differential metabolic responses of periarticular ligaments and tendon to joint immobilization. J Appl Physiol 1992;72:1687–91.
19. Loitz BJ, Zernicke RF, Vailas AC, Kody MH, Burstein AH. Effects of short-term immobilization versus continuous passive motion in a non-weight-bearing model. Clin Orthop 1989;244:265–71.
20. Amiel D, Woo SL-Y, Harwood FL, Akeson WH. The effect of immobilization on collagen turnover in connective tissue: A biochemical-biomechanical correlation. Acta Orthop Scand 1982;53:325–32.
21. Woo SL-Y, Gomez MA, Sites TJ, Newton PO, Orlando CA, Akeson WH. The biomechanical and morphological changes in the medial collateral ligament of the rabbit after immobilization and remobilization. J Bone Jt Surg Am 1987;69A:1200–11.
22. Hayashi K. Biomechanical studies of the remodeling of knee joint tendons and ligaments. J Biomech 1996;29:707–16.
23. Walsh S, Frank C, Hart D. Immobilization alters cell metabolism in an immature ligament. Clin Orthop 1992;277:277–88.
24. Walsh S, Frank C, Shrive N, Hart D. Knee immobilization inhibits biomechanical maturation of the rabbit medial collateral ligament. Clin Orthop 1993;297:253–-61.
25. Mik;aki B, Carter DR. Bone strain gage data and theoretical models of functional adaptation. J Biomech 1995;28:465–9.
26. Beynnon B, Howe JG, Pope MH, Johnson RJ, Fleming BC. The measurement of anterior cruciate ligament strain in vivo. Int Orthop 1992;16:1–12.
27. Woo SL-Y, Weiss JA, Gomez MA, Hawkins DA. Measurement of changes in ligament tension with knee motion and skeletal maturation. J Biomech Eng 1990;112:46–51.
28. Nakagawa Y, Hayashi K, Yamamoto N, Nagashima K. Age-related changes in biomechanical properties of the achilles tendon in rabbits. Europ J Appl Physiol 1996;73:7–10.
29. Gibb JA, Williams JM. The rabbit in New Zealand. In: Thompson HV, King CM, eds. The European rabbit: the history and biology of a successful colonizer. Oxford: Oxford University Press; 1994. p. 188.
30. Walmsley B, Hodgson JA, Burke RE. Forces produced by medial gastrocnemius and soleus muscles during locomotion in freely moving cats. J Neurophysiol 1978;41:1203–16.
31. Whiting WC, Gregor RJ, Roy RR, Edgerton VR. A technique for estimating mechanical work of individual muscles in the cat during treadmill locomotion. J Biomech 1984;17:685–94.
32. Cunliffe-Beamer TL, Les EP. The laboratory mouse. In: Poole TB, ed. The UFAW handbook on the care and management of laboratory animals. Essex: Longman Scientific and Technical; 1987. p. 275–308.
33. Holtz W. Pigs and minipigs. In: Poole TB, ed. The UFAW handbook on the care and management of laboratory animals. Essex: Longman Scientific and Technical; 1987. p. 496.
34. Whalen RT, Carter DR, Steele CR. Influence of physical activity on the regulation of bone density. J Biomech 1988;21:825–37.
35. Wren TAL, Carter DR. A microstructural model for the tensile constitutive and failure behavior of soft skeletal connective tissues. J Biomech Eng 1998;120:55–61.
36. Sutker BD, Lester GE, Banes AJ, Dahners LE. Cyclic strain stimulates DNA and collagen synthesis in fibroblasts cultured from rat medial collateral ligaments. Trans Orthop Res Soc 1990;15:130.
37. Harris AK, Stopak D, Wild P. Fibroblast traction as a mechanism for collagen morphogenesis. Nature 1981;290:249–51.
38. Nakatsuji N, Johnson KE. Experimental manipulation of a contact guidance system in amphibian gastrulation by mechanical tension. Nature 1984;307:453–55.
39. Aggeler J, Frisch SM, Werb Z. Changes in cell shape correlate with collagenase gene expression in rabbit synovial fibroblasts. J Cell Biol 1984;98:1662–7.