Department of Veterans Affairs

Journal of Rehabilitation Research and Development Vol. 37 No. 3, May/June 2000
Pages 325–333

Evaluation of the new flexible contour backrest for wheelchairs

Frédéric Parent, MScA; Jean Dansereau, PhD; Michèle Lacoste, OT; Rachid Aissaoui, PhD
Natural Sciences and Engineering Research Council of Canada (NSERC), Industrial Research Chair on Seating Aids, École Polytechnique de Montréal, C.P. 6079, succ. "Centre-ville," Montréal, Québec, Canada, H3C 3A7

Abstract—A new flexible contour backrest for wheelchairs was designed with the objectives of offering adequate posture, uniform pressure distribution, and comfort to the users while keeping the advantages of conventional sling backrests, such as easy to fold, light weight, unobtrusive, and airy. The purpose of this study is to compare the new backrest with two commercially available wheelchair backrests, an adjustable-tension (AT) backrest and a back cushion on a rigid support (RS), in terms of pressure distribution, back profile accommodation, and short-term comfort. Evaluations were done with 15 nonimpaired subjects in a static position. It was shown that the new backrest distributes pressure in a more uniform way than the AT and in a way similar to the RS, while giving a better fit to subjects' trunks than other backrests because of its multiple adjustments. Finally, subjects felt that the new backrest is as comfortable as the RS and more comfortable than the AT.

Key words: *backrest, comfort, posture, pressure distribution, wheelchair.*

INTRODUCTION

Conventional manual wheelchairs are generally equipped with sling backrests to be easily folded. It is clinically accepted that sitting in sling backrests may affect the posture of the users (1–4). In fact, they may produce kyphosis and posterior tilting of the pelvis that can lead to back and neck pain, and even to long-term deformities of the spine and pelvis (1). Moreover, sling backrests do not provide enough lateral trunk support to prevent, manage, or correct trunk-alignment problems. Because of this, conventional sling backrests are often replaced by other types. In Quebec province, one of the most recommended backrests to improve posture and comfort is the combination of a back cushion on a rigid support (RS; see **Figure 1a**). Valiquette and Audet (5) reported that, from a posture standpoint, it is generally accepted that RS cushions represent better solutions than the sling type for users who need more posterior and lateral trunk support. In fact, the RS is clinically recognized to produce more uniform pressure distribution throughout the backrest, allow better accommodation of a variety of back shapes, and provide more comfort (6,7).

Harms (2) evaluated posture and comfort of 30 subjects, 15 with impairments and 15 controls, in three types of wheelchair seats and backrests: sling seat and backrest; seat and backrest cushions chamfered to fit into the cavities of the slings; and the RS. Using a series of probes that could be passed through holes made in each backrest, she measured the spinal profile of each subject. To evaluate comfort, a questionnaire was used that focused on different regions of the back and seat. Harms found significant differences in the back profile adopted by the subjects in

This research was funded by the Natural Sciences and Engineering Research Council of Canada (NSERC), Promed Inc. and Orthofab Inc.

Address correspondence to: Jean Dansereau, Department of Mechanical Engineering, École Polytechnique de Montréal Chaire Industrielle sur les aides techniques à la posture, local JB-6424 C.P. 6079, succ. "Centre-ville" Montréal, Québec, Canada, H3C 3A7; email: jean.dansereau@meca.polymtl.ca.

Journal of Rehabilitation Research and Development Vol. 37 No. 3 2000

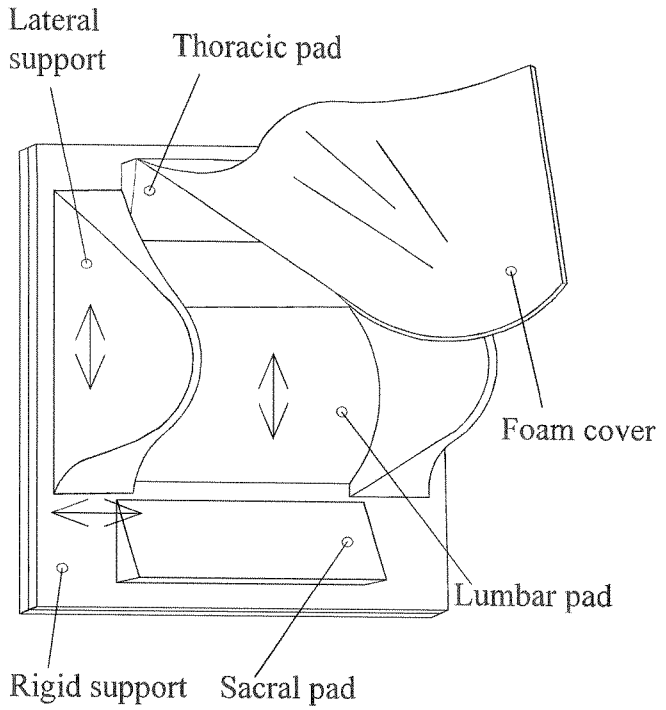

Figure 1a.
Wheelchair backrests commonly used to replace the conventional sling backrests in Quebec province: RS, a back cushion on a rigid support (Promed Inc.).

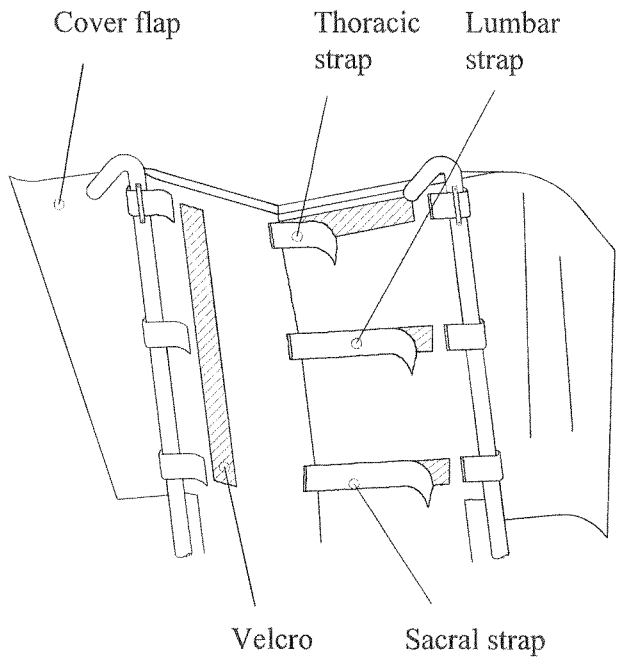

Figure 1b.
Wheelchair backrests commonly used to replace the conventional sling backrests in Quebec province: AT, an adjustable-tension backrest (Orthofab Inc.).

the three chairs: all showed a kyphotic lumbar attitude while seated in the slings and a lordosis in the other two types. Most found that the slings were the least comfortable.

Although the RS is clinically recognized to improve user posture and comfort, it does not offer the advantages of the sling backrests, such as foldability, lighter weight, low cost, and simplicity (1,5). In this way, adjustable-tension backrests (AT; see **Figure 1b**) were introduced to preserve sling characteristics while improving user posture and comfort (8). However, clinical experience revealed that the AT offers limited lateral trunk support and nonuniform pressure distribution. In fact, the pressure is more concentrated on the different straps, rather than being spread over the whole backrest. Finally, no detailed studies have been conducted to evaluate the effects on posture and comfort provided by this type of backrest.

Recently, Zollars and Chesney (9) have designed a different type of AT to address the postural problems of users with sling backrests. The "back support shaping system" (BSS) features shaped support pads with tension straps. Sixty-nine subjects with impairments participated in a clinical evaluation of this device; their postures were determined by measuring horizontal distances in the sagittal plane between a fixed vertical reference and the back to evaluate objectively the effects of the device on posture. Comfort was evaluated by questionnaire. The authors found that, compared to the sling type, the BSS improved comfort, spinal posture, and wheelchair mobility for most of the subjects.

To maintain most of the sling backrest's characteristics while offering adequate posture and comfort, a new flexible contour backrest has been designed (FC; see **Figure 2**). This backrest accommodates back contours from normal geometry to mild kyphosis by using vertical aluminum stays and adjustable straps. Lateral trunk support is offered by using curved back posts that could be adjusted in rotation. According to the literature and based on clinical assumptions, it was hypothesized that the new backrest should distribute the pressure in a uniform way, accommodate the user's back profile, and offer comfort. The main purpose of this study is to compare the effects of the FC with those of two commercially available backrests often used in Quebec province to replace the conventional sling backrests, the RS and the AT.

MATERIALS AND METHODS

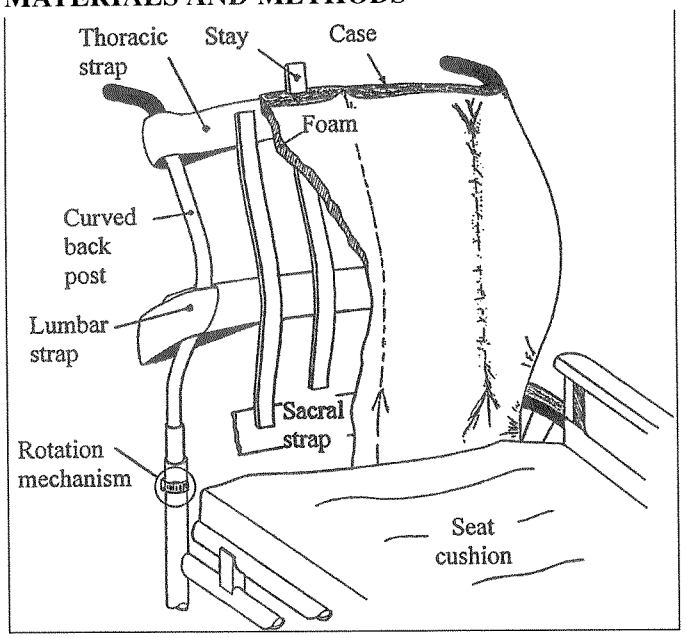

Figure 2.
Schematic representation of the new flexible contour backrest.

Subjects

Fifteen nonimpaired controls participated in this study: 8 males and 7 females; **Table 1** presents their characteristics. Most were between 25 and 30 years of age; all reported no previous back pain or deformity. The FC accommodates trunk widths from 28 to 36 cm; subjects were selected to be within these limits. Since this study was done to conduct a first evaluation of the new device, it was necessary to measure its effects on posture and comfort on controls to know whether it could distribute the pressure in a uniform way and be able to reproduce back shapes.

Backrest Description and Adjustment

The three backrests used in this study and their adjustments are:

Table 1.
Characteristics of the group of control subjects.

	Mean	SD	Range
Age (years)	26.7	5.0	21 - 37
Weight (kg)	68.2	6.8	52.3 - 77.3
Height (cm)	173.7	6.0	162 - 180
Trunk width*	30.5	2.0	27.3 - 34.3

*in cm, evaluated 4 cm below the axilla.

Flexible Contour Backrest

The FC (**Figure 2**) was designed to reproduce the back profile of the user more efficiently by using adjustable straps and vertical stays while offering lateral support with curved back posts that can be adjusted in rotation (10). During evaluation, an occupational therapist (OT) adjusted the straps and the stays according to subject preferences and to reproduce the back geometry. The lumbar strap, which can be adjusted in height, was positioned to support the upper sacrum and posterior iliac crests as recommended by Zacharkow (11). Rotation of the curved back posts was adjusted to allow a free space of 1 cm between the subject's trunk and each back post. The OT also fixed the FC's height in such a way that the lateral support began above the iliac crest of each subject. The height of the backrest was generally 40 cm above the seat surface.

Back Cushion on a Rigid Support

It is clinically recognized that the RS represents one of the best solutions for offering adequate posture and comfort. In order to preserve this clinical reference, a well-adjusted cushion had to be made for each subject (**Figure 1a**). Different foam components are used (lumbar pads, lateral supports, sacral and thoracic pads) to reproduce subject trunk shape as closely as possible. Foam components and the rigid support were provided by Promed Inc. (Montreal, PQ, Canada). An OT positioned the components on the RS according to the back geometry of each subject. The apex of the lumbar pad was positioned to give support to the upper sacrum and posterior iliac crests. Lateral supports were placed to leave a space of 1 cm between the subject and each support. The standard height of the Promed back cushion, 46 cm above the seat surface, was used throughout.

Adjustable-Tension Backrest

The AT used in this study was provided by Orthofab Inc. (Quebec, PQ, Canada). Composed of foam and nylon, this backrest is similar to a conventional sling except for the three adjustable straps located at the thoracic, lumbar, and sacral levels (**Figure 1b**). The strap tension was adjusted by the OT according to subject preferences. The height of the backrest was the same as that of the FC.

Positioning Procedure

Subjects followed a specific positioning procedure. A wheelchair seating simulator (Simulator for

Journal of Rehabilitation Research and Development Vol. 37 No. 3 2000

Evaluations and Measures from Promed Inc.) allowing adjustment of seat tilt, seat-to-back angle, seat position (height, depth, and width), footrest positions (height and angle) and armrest positions (height and width in between) was used for the evaluations. The seat tilt angle and seat-to-back angle were fixed at 10 and 95º respectively, as recommended by Zacharkow (4). Other components were adjusted according to the anthropometry of each subject:

• Seat Depth: adjusted to leave a space of 2.5 to 5 cm between the front edge of the seat and the popliteal fossa

• Footrests: adjusted to maintain the thighs parallel to the seat cushion

• Armrests: adjusted 2.5 cm higher than the height of the lower part of the arm when the shoulder is relaxed and the elbow is maintained at 90º.

Each backrest was mounted on the simulator to preserve the same subject's position. The RS was the first to be evaluated, followed by the FC and the AT. For each, subjects were seated in their own neutral posture (12), and the backrest adjusted as explained previously. Seat cushions used consisted of an ischial relief foam (Promed Inc.).

Pressure Distribution

To measure pressure distribution on backrest and seat, two flexible pressure mats were used (Force Sensing Array, Vista Medical Ltd., Winnipeg, Manitoba): one for the seat (15×15 matrix=225 sensors) and one for the back (15×16 matrix=240 sensors). The accuracy of pressure sensors in the mat is ±5 percent (as reported by the manufacturer). The pressure mats did not affect the seat and back geometry considerably. After a period of 10 min, pressure was recorded during 1 min at a frequency of 0.3 Hz. Subjects were considered not moving throughout the entire interval. An average pressure distribution was calculated from the 18 pressure mat acquisitions. From the graphical output representations of pressure distributions over the whole backrests, different regions were defined (**Figure 3a**):

• Lumbar Region: delimited by the position of the lumbar pad of the back cushion and the width of the posterior trunk region (middle part of the trunk)

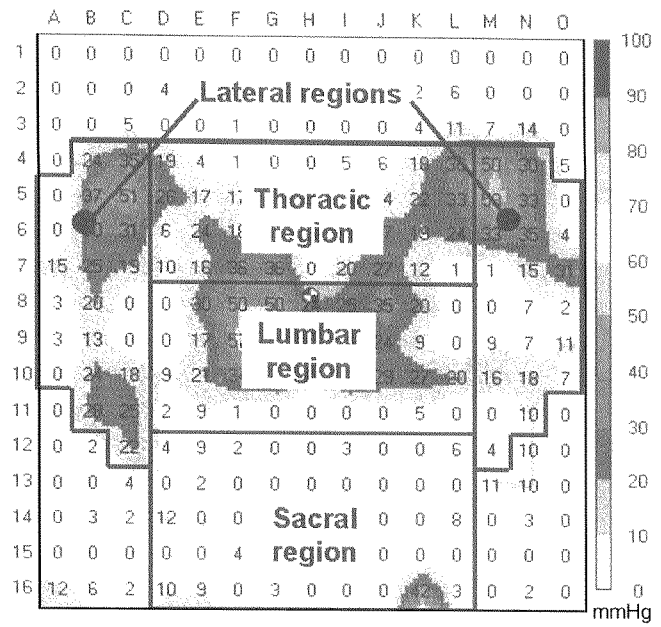

Figure 3a.
Typical examples of pressure distribution with the FC: pressure regions defined on the backrest.

• Sacral Region: below the lumbar region

• Thoracic Region: above the lumbar region to the top of the backrest

• Left and Right Lateral Regions: located on either side of the posterior trunk region and delimited by the back posts.

For each region, mean pressure and standard deviation (SD) were computed. In addition, for each backrest, the pressure variability between regions as well as the variability of the contact surface area from one subject to another were calculated. The pressure variability between regions was evaluated by calculating, over all subjects, the SD of mean pressure for the five backrest regions (SD of 75 mean pressure values: 15 subjects×5 regions). This pressure parameter was used as an index to characterize how the pressure was uniformly distributed between the different regions of the backrest. The variability of the contact surface area from one subject to another was evaluated by calculating the SD of the surface area (number of sensors measuring at least 5 mmHg, where one sensor represents approximately 8 cm^2) over the entire backrest for all subjects. This parameter was evaluated in order to verify whether the different backrests were compliant

with respect to the different persons' trunk shapes. Finally, to evaluate maximum seat pressure, two regions of nine sensors (3×3) were identified around the position of each ischial tuberosity (**Figure 3b**). These sensors were used to provide a surface area of more than 64 cm^2 over each ischial tuberosity as recommended by Koo (13), to take into consideration the possible sliding on the pressure matrix.

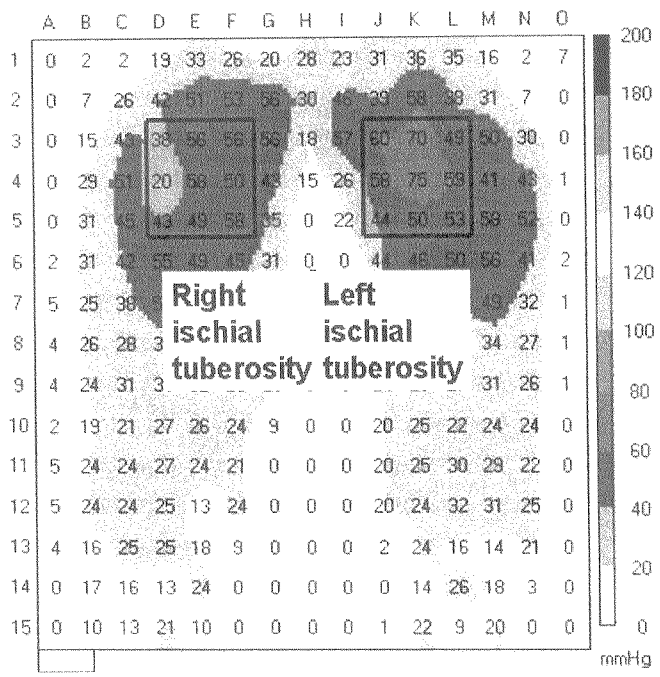

Figure 3b.
Typical examples of pressure distribution with the FC: pressure regions defined on the seat

Back Profile

To measure back profile, a 3-D digitization articulated arm (MicroScribe-3DL: Immersion Corporation, San Jose, CA) was used. The accuracy of this device is 0.64 mm (as reported by the manufacturer). The subject's back was digitized through holes along the spinal line in each backrest at intervals of approximately 25 mm from C7 to the bottom. The position of the left greater trochanter was also digitized. All digitized points were first projected on the sagittal plane. The position of the projected left greater trochanter was used to define the height of the lower end of the spinal curve. Then, cubic spline interpolation functions passing through all digitized projected points from C7 to the end of the curve were used to generate, for each subject, three back profiles of 25 corresponding equidistant points (**Figure 4**). With this mathematical approach, it was possible to compare shapes of different profiles by using a least squares algorithm that allows the adequate superimposition of the different curve shapes. The least square residual calculated between curves represents the mean difference between the 25 corresponding points. In this study, five controls were pretested to determine the threshold value of the least squares residual necessary to specify that two back profile measurements can be considered similar in terms of least square adjustment. During the pretest, back

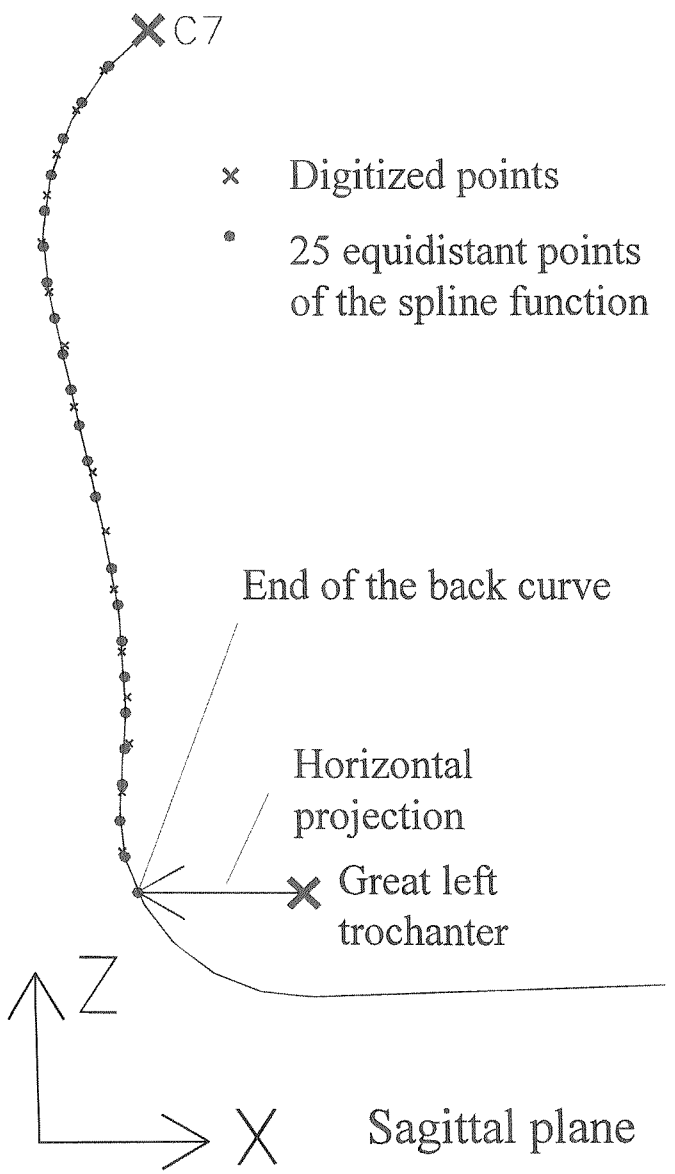

Figure 4.
Representation of back curve shapes obtained by projection of the digitized points in the sagittal plane.

profiles were digitized twice in the same backrest. Subjects were considered as not moving between both measurements.

Comfort Evaluation

To evaluate the immediate comfort offered by each backrest, a short questionnaire was administrated to each subject as often reported in the literature (2,7). Comfort was evaluated on a scale of 1 to 5, with 1 representing 'very uncomfortable' and 5 representing 'very comfortable', first for the whole backrest and afterward for each of its five regions.

Statistical Analysis

For each pressure parameter, a paired t-test for the group of 15 subjects was performed to determine whether a significant difference existed between the FC and the RS as well as between the FC and the AT. For comfort analysis, the Mann-Whitney U test was used to demonstrate whether any differences existed between them. On all tests, a null hypothesis of no difference between each parameter for two backrests was used with a 5 percent level of significance.

RESULTS

Pressure Distribution

Table 2 presents a summary of pressure measurements calculated for the FC, RS, and AT. According to these results, changing the back cushion for the FC did not change the mean pressure for the whole backrest (12.6±1.7 mmHg versus 12.6±2.3 mmHg). However, changing the FC for the AT significantly increased the overall pressure measurements (12.6±2.3 mmHg versus 13.9±2.3 mmHg). Results show that pressure in the lumbar and sacral regions are significantly higher for the RS than the FC, probably due to the fact that there were pads located at these levels for the RS, and therefore the contact was higher. Other results show that pressure in the thoracic region is significantly higher for the AT (27.1±5.8 mmHg) than the FC (17.2±7.3 mmHg). On the other hand, pressure in the lateral regions is significantly higher for the FC than the AT (13 mmHg versus 7.6 mmHg). Finally, the seat pressure is not affected by the change of backrests.

The pressure variability between regions (**Table 3**) is similar for the RS and the FC (±6.7 mmHg versus ±7.0 mmHg), while it is significantly higher for the AT (± 9.5 mmHg) compared to the FC. On the other hand, the FC shows the lowest variability of surface contact area for this sample of subjects. Other backrests are less compliant, with twice the variability.

Table 2.
Mean and standard deviation of mean pressure measurements for the seat and the three types of backrests for the 15 evaluated subjects.

Pressure Regions	RS	FC	AT
Whole backrest	12.6±1.7	12.6±2.3	13.9±2.3*
Sacral region	9.9±7.9*	5.3±2.6	6.7±3.1
Lumbar region	20.5±7.3*	14.5±6.1	15.9±5.8
Thoracic region	13.4±6.3	17.2±7.3	27.1±5.8*
Lateral parts: left	10.0±2.2	9.6±2.5*	12.4±5.9
right	14.4±4.7	7.6±4.2*	7.6±4.0*
Whole seat	35.0±4.0	33.9±2.9	32.9±3.3
Ischial tuberosities: left	48.7±9.1	47.0±7.4	51.3±6.7
right	51.8±6.3	47.9±6.4	49.6±7.2

Mean values in mmHg; RS=Back cushion on a rigid support; FC=Flexible contour backrest; AT=Adjustable-tension backrest; * Significant statistical difference with the FC.

Table 3.
Summary of the pressure variability between regions for the 15 evaluated subjects and surface contact area variability calculated for the three types of wheelchair backrests.

	RS	FC	AT
Pressure variability between regions	±7.0 mmHg	±6.8 mmHg	±9.1 mmHg
Surface contact variability	±124 cm^2*	±65 cm^2	±151 cm^2*

RS=Back cushion on a rigid support; FC=Flexible contour backrest; AT=Adjustable-tension backrest; * Significant statistical difference with the FC.

Back Profile

As shown on **Figure 5,** the sitting posture of most subjects was similar for the FC and RS, while they sat more posteriorly in the AT. This postural change was due to the fact that the curved back posts of the FC allow the lumbar and thoracic straps to be located more anteriorly with respect to seat of the wheelchair. Pretest results related to the back profile similarity showed a mean value of least square residual of 0.9 mm, with a maximum value of 1.5 mm. Assuming that two back profiles can be considered similar if the least square residual is lower than 1.5 mm, 66 percent of the 15 subjects had similar back

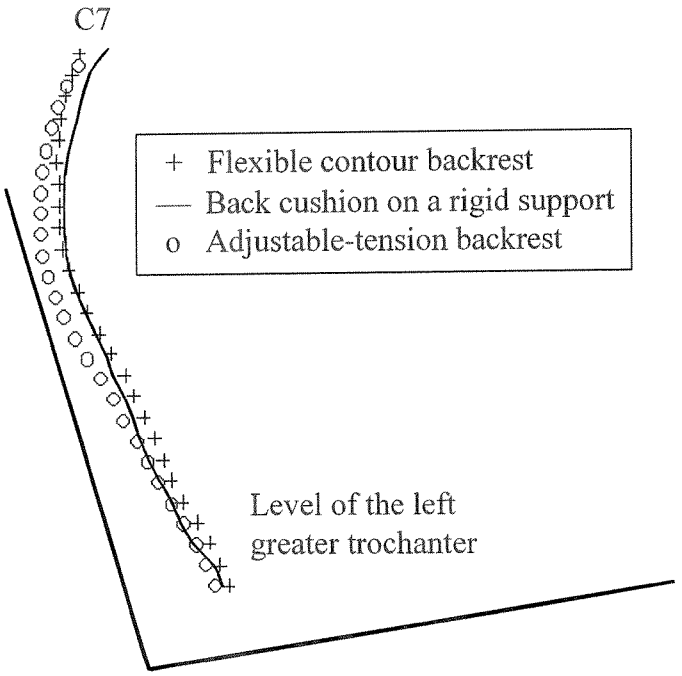

Figure 5.
Typical pattern of subjects' back profile measured for the three types of backrests.

profiles in the FC and RS. On the other hand, 40 percent of the subjects were considered similar in the FC and AT.

Comfort

In general, rating of comfort was quite high for each backrest; scores in the different regions for the three backrests were above 3. However, most of the subjects found that the AT was less comfortable (**Figure 6**).

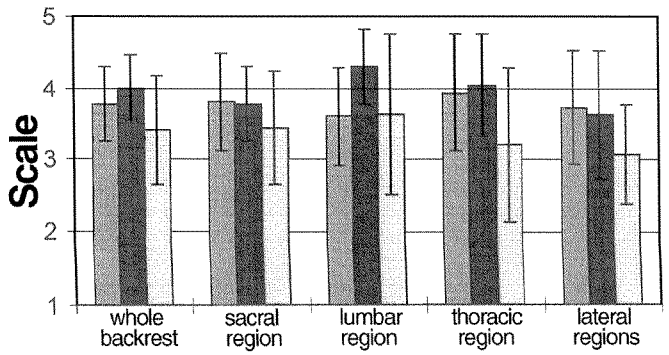

Figure 6.
Results of comfort evaluation for the flexible contour backrest (dark gray), the back cushion on a rigid support (medium gray) and the adjustable-tension backrest (light gray).

Therefore, it obtained a score of 3.4±0.8 for the whole backrest, while the score of the FC was significantly higher (4.0±0.5). For the backrest regions, results showed that the AT is significantly less comfortable than the FC. Other results showed that the FC is as comfortable as the RS for all regions except the lumbar region, where it is significantly more comfortable.

DISCUSSION

The purpose of this study was to compare the effects of the FC on wheelchair seating posture and short-term comfort in relation with two commercially available backrests: the RS and the AT. A review of the literature revealed few studies that have compared different types of backrests using objective measurements. The present study is one of the first to quantitatively compare three types of backrests with geometrical, mechanical, and comfort measurements. To date, no scientific evidence has defined the criteria of what is an adequate wheelchair backrest for seating posture and comfort; consequently, the comparisons made in this study were grounded on clinical hypotheses. In this context, one of the FC design criteria was based on the hypothesis that a backrest should provide uniform pressure distribution (7). The results revealed that the AT presented the least uniform pressure distribution between regions. In fact, pressure was concentrated at the thoracic strap level, while little pressure was found in the lateral segments. Clinical observations have reported that this type of backrest tends to offer limited lateral trunk support and does not allow adequate pressure distribution throughout the backrest. Results from the present study confirmed these observations. The high pressure in the thoracic region resulted in an increase of the mean pressure of the entire backrest. However, the mean pressure of the AT (13.9±2.3 mmHg) was not relatively higher than the one calculated for the FC. This finding suggests that the mean pressure should not be the only parameter used to characterize pressure distribution of a wheelchair backrest.

The FC was designed to offer a more uniform pressure distribution than the AT, and results obtained showed that it presented a similar pressure distribution to that of the RS. Two features of the FC can explain these results: the combination of straps and stays, and the curved back posts. Several subjects (n=9) did not feel the straps incorporated in the new backrest, but they did feel them in the AT (at the location where the pressure was the highest).

The use of curved back posts in the FC provides lateral trunk support, while allowing the surface contact area to be continuous throughout the entire backrest. In view of these special features, the variability of the surface contact area was lower for the new backrest in comparison with the other two. As a result, when adjusted to subject morphology, the backrest came in contact with the trunk surface, providing better back and lateral support accommodation. Consequently, the FC provided a better fit than did the other two because of its multiple adjustments (curved back posts, back posts rotation, and strap adjustment, combined with shaped aluminum stays). Results also revealed that the back profile in the FC was similar to that in the RS.

To date, there have not been any studies that have evaluated and defined what can be considered to be an adequate back profile in a wheelchair backrest, as well as which wheelchair backrest provides optimum seating posture. Although Harms (2) has demonstrated that the RS improves the user's posture with respect to the conventional sling backrest, there is no substantiating evidence to show that optimal posture is provided by it. In fact, there are only clinical reports that claim the RS is one of the best solutions to providing adequate seating posture and comfort. Thus, it is not yet possible, from the present body of knowledge in the field of wheelchair seating, to affirm with certitude that there is one type of backrest that is scientifically recognized as offering an optimal seating posture.

In the present study, evaluation of the backrests was performed on control subjects. This was necessary for obtaining the overall biomechanical and comfort effects of the different backrests in order to confirm that the objectives for the new design were achieved and soundly defined. In the design process, assessments on controls were done in order to generate recommendations for design improvements. Afterward, it would be appropriate and necessary to proceed to a second set of evaluations with a group of subjects with disabilities. In the present context, it was difficult to evaluate the quality of the lateral trunk stability provided by the different backrests: although the controls felt that the lateral trunk support was better in the FC than in the AT, they were in full control of their trunks and therefore the results cannot be generalized to persons with disabilities. Nevertheless, pressure results showed that the new backrest generated more contact in the lateral trunk region than the did the AT. It is therefore possible to assume that the new backrest can offer a more adequate lateral trunk stability. A similar assumption may also be applied to the comfort evaluation because of the subjects' inexperience in using a wheelchair.

Although the primary purpose of this study was to compare the effects on posture and short-term comfort of the FC with two different wheelchair backrests, it should be kept in mind that a complete wheelchair backrest comparison must take into account other parameters. Pressure and comfort both represent parameters often used to compare the effects of different wheelchair backrests (2,7); however, these are not the only ones that should be considered: the capacity to propel the wheelchair, user stability (14), and the shear at the backrest interface are also significant. Future research will be conducted to investigate the performance of the different backrests in relation to these parameters.

CONCLUSION

This paper introduces quantitative methods to evaluate and compare different wheelchair backrests. Although these methods have some limitations, they found significant differences in terms of pressure measurements, back profile accommodation, and comfort between the new FC and two commercially available wheelchair backrests. It was found that the new backrest distributes pressure in a more uniform way than the AT and in a way similar to the RS. It was also found that the new backrest gives a better fit than other backrests because of its multiple adjustments (curved back posts, back post rotation, and strap adjustment combined with aluminum stays). Finally, subjects felt that the new backrest is as comfortable as the RS and more comfortable than the AT.

Although methods presented in this study concern postural and comfort evaluation, future evaluations have also to be performed with persons with disabilities to further investigate the performance of the different backrests. Parameters related to lateral stability, propulsion efficiency as well as shear evaluation should also be considered. However, results of this study show that the FC, by its multiple adjustable features, could represent an adequate wheelchair backrest to people who present mild-to-moderate seating problems, more specifically low tetraplegics and paraplegics who often present trunk problems caused by the use of conventional sling backrests (scoliosis, kyphosis, trunk misalignment). The backrest could be also suitable for other users, for example elderly persons, in order to offer them more lateral support and comfort.

ACKNOWLEDGEMENTS

Special thanks to subjects who participated in this study and to Claude Valiquette for his advice on the methodology.

REFERENCES

1. Zollars JA, Axelson PW. The back support shaping system: an alternative for person using wheelchairs with sling upholstery. Proceedings of the 16th Annual RESNA Conference; 1993 Jun 25-30; Las Vegas, NV. Washington, DC: RESNA Press; 1993. p. 274-276.
2. Harms M. Effects of wheelchair design on posture and comfort of users. Physiotherapy 1990;76(5):266–71.
3. Bergen A, Presperin J, Tallman T. Positioning for functions: wheelchairs and other assistive technologies. Valhalla, NY: Valhalla Rehabilitation Publications, Ltd.; 1990.
4. Zacharkow D. Wheelchair posture and pressure sores. Springfield, IL: Charles C. Thomas, Publisher; 1984.
5. Valiquette C, Audet J. Pushing the limits of the sling concept: the contoured sling backrest. Proceedings of the Canadian seating and mobility conference; 1992 Sep 17-18, Toronto, ON; 1992.
6. Stone J. Clinical considerations in the selection of commercial wheelchair backs. Proceedings of the 12th International Seating Symposium; 1996 Mar 7-9, Vancouver, BC; 1996. p. 221–4.
7. Trefler E, Hobson AD, Taylor SJ, Monahan CL, Shaw CG. Seating and mobility for persons with physical disabilities. In: Therapy skill builders. Memphis, TN: University of Tennessee; 1993.
8. Engström B. Ergonomics and wheelchairs: manual of principles. Stockholm: Posturalis Books; 1995
9. Zollars JA, Chesney DA. The design of a posterior trunk support shaping system: clinical methodologies for measuring changes in sitting posture with function. Proceedings of the 10th International Seating Symposium; 1994 Feb 17-19, Vancouver, BC; 1996. p. 97–108.
10. Parent F, Dansereau J, Valiquette C. The flexible contour backrest for wheelchairs: A new design offering adequate posture and comfort. Proceedings of the 20th Annual RESNA Conference; 1997 Jun 20-24, Pittsburgh, PA. Washington, DC: RESNA Press; 1997. p.181-183.
11. Zacharkow D. The problem with lumbar support. Phys Ther Forum 1990;9(35).
12. Zollars JA. Special seating: an illustrated guide. Minneapolis, MN: Otto Bock Orthopedic Industry Inc.; 1996. p. 10–4.
13. Koo TKK, Mak AFT, Lee YL. Posture effect on seating surface biomechanics: comparison between two seating cushions. Arch Phys Med Rehabil 1996;77:40–7.
14. Axelson PW, Chesney DA. Clinical and research methodologies for measuring functional changes in seating systems. Proceedings of the 12th International Seating Symposium; 1996 Mar 7-9, Vancouver, BC; 1996. p. 81–4.

Submitted for publication October 3, 1997. Accepted in revised form October 27, 1998.