Department of Veterans Affairs

Journal of Rehabilitation Research and Development Vol. 37 No. 3, May/June 2000
Pages 261–271

Force-directed design of a voluntary closing hand prosthesis

Hans de Visser, MSc; Just L. Herder, MSc
Wilmer Group, Delft University of Technology, Mekelweg 2, The Netherlands

Abstract—This paper presents the design of a body-powered voluntary closing prosthetic hand. It is argued that the movement of the fingers before establishing a grip is much less relevant for good control of the object held than the distribution of forces once the object has been contacted. Based on this notion, the configurations of forces on the fingers and the force transmission through the whole mechanism were taken as a point of departure for the design, rather than movement characteristics. For a good distribution of pinching forces on the object and a natural behavior, the prosthesis is made adaptive and flexible. To achieve good force feedback, the disturbing influences of the cosmetic glove are strongly reduced by a compensation mechanism. To further improve the transmission of forces, friction is reduced by furnishing the whole mechanism with rolling links. This force-directed design approach has led to a simple mechanism with low operating force and good feedback of the pinching force.

Key words: *adaptivity, cosmetic glove compensation, flexibility, force-directed design, force feedback, hand prosthesis.*

This project is based on work supported by the Delft University of Technology.

Address all correspondence and requests for reprints to: Hans de Visser, Section Man-Machine Systems and Control, Faculty for Design, Engineering and Production, Delft University of Technology, Mekelweg 2, 2628CD Delft, The Netherlands.

INTRODUCTION

Since a prosthesis can never fully replace a human hand, decisions have to be made about what functions should or should need not be possible with a prosthetic device, as well as about its appearance, and other aspects. During 30 years of research and collaboration with rehabilitation teams, the Wilmer Group at the Delft University of Technology has derived design criteria for upper limb prostheses (1). In addition to good motor function properties (e.g., sufficient performance, high reliability and energy efficiency), the following criteria must be addressed and fulfilled:

• Cosmetic appeal: The majority of Dutch persons with upper-limb amputation are unilateral transradial amputees. Most want their prostheses to attract the least amount of attention possible. If a prosthetic device looks unappealing, most users are not even willing to put it on, no matter how well it functions.

• Comfort: A prosthesis should be comfortable to wear. For example, it should be as light as possible to minimize pressure on the skin of the residual limb.

• Control: A prosthesis should also be easy to operate; therefore, a low operating force and good feedback of the pinching force are appreciated. Furthermore, the control should be logical and intuitive.

Journal of Rehabilitation Research and Development Vol. 37 No. 3 2000

Based on experience, the order of the above criteria isalso the order in which most users judge a prosthesis.

The design concepts used by the Wilmer Group follow directly from these criteria. To satisfy the demand for a good cosmetic appearance, it is desirable not only to use a cosmetic glove, but also to design a hand with adaptive fingers rather than the conventional stiff ones for a more lifelike look. In addition, use of a flexible structure instead of a hard and solid frame allows for a more natural feel. The Wilmer Group focuses mainly on body-powered devices (2), since they are lightweight, and heavy electric motors and batteries can be omitted. Moreover, body-powered prostheses have force feedback. Feedback, essential for the proper control of any system, is intrinsically present because the user has to supply the pinching force via an operating cable.

There are two main categories of body-powered hand prosthesis systems: voluntary opening and voluntary closing. In a voluntary opening device, the hand is closed by a spring that also provides the pinching force. When the cable is pulled with an increasing operating force, the pinching force decreases and eventually the hand will open. When the cable is relaxed, the hand will close and pinch. Several authors (3–5) consider this counterintuitive, which makes the force feedback illogical. Voluntary closing devices, by comparison, are fully opened when the cable is relaxed and close and pinch when the cable is pulled. In this case, the pinching force increases with increasing operating force, allowing logical force feedback. Still, most prostheses are voluntary opening. According to Fletcher (5), this is because of poor experiences in the past with voluntary closing devices, caused mainly by the specific designs and not by the principle. The voluntary closing principle was the basis for the design presented in this paper, primarily because good feedback is considered necessary for good control, but also because the main problem with the voluntary closing design, namely, a fully opened hand when the hand is not in use, can be solved.

The voluntary closing design has the capability of logical force feedback, but to achieve high quality of force transmission from the prosthetic hand to the operating muscles, the prosthesis mechanism must be free of undesired forces. This implies that friction in the joints should be minimized and a mechanism should be introduced to compensate for the opposing forces in the cosmetic glove that result from its deformation during movement. Such a reduction of the opposing forces will lead to easier and more comfortable operation. Furthermore, to obtain useful force feedback, the force transfer ratio (the ratio of total pinching force to total operating or tendon force) should be independent of both the size and shape of the object being held.

METHODS

This section is divided in two parts. First, a design approach is chosen, based on an analysis of what should be possible with the prosthesis and how this should be achieved. Second, the actual design of a prototype with a high efficiency is described, followed by some of its details, such as the glove compensation mechanism, the supporting function of the ring finger and the flexibility of the mechanism.

Design Approach

In many cases, a prosthesis is used to indirectly support the function of the sound hand by clamping an object between the prosthesis and the upper body (6). In the case of bilateral tasks, the prosthesis should be able to hold an object and do some simple manipulations in a smooth way, preferably in such a way that it is not noticed that a prosthesis is used. It might seem logical to design the prosthesis to move as much like the human hand as possible to achieve a smooth behavior. The optimal movement (7) would be as follows: when grasping an object, the proximal phalanx should be the first to make contact with the object, followed by the middle phalanx and eventually the distal phalanx, as shown in **Figure 1**. This way, the arc described by the fingertip is the largest possible. However, with a focus on movement, the fingers may move very nicely toward the object, but the resulting grip will not be good if the forces are not applied proper-

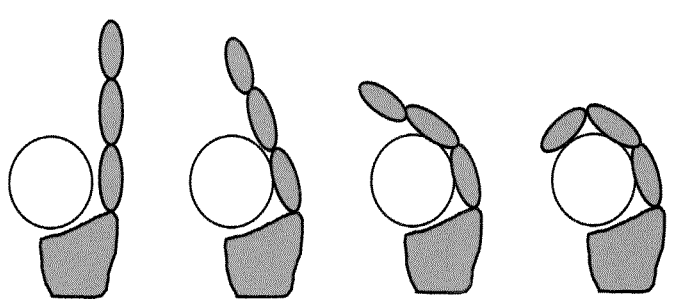

Figure 1.
Movement-directed design is usually aimed at achieving this= kind of finger movement. Object contact is first with the proximal phalanx, followed by the middle, then distal, phalanges.

ly to the object. A bad grip will not only increase the required operating force, but it will also result in bad control over the object being held. This will most likely lead to clumsy behavior with the prosthesis, making it only more apparent that a prosthesis is being worn.

Still, in the past, virtually all multi-articular hands have been designed based on movement (8), and were very complicated. None of these designs has led to a successful, often-used product. Furthermore, field research done by Van Lunteren (6) showed that almost all grasping with a prosthesis is done indirectly, meaning that the sound hand picks up the object and puts it in the prosthetic hand. In the occasions when direct grasping does occur, it usually involves a rigidly attached object and the prosthesis is pushed around or onto it. Since the fingers are hardly ever moved actively, there is no need for optimized movement. Therefore, it is much more advantageous to focus on achieving a good configuration of forces once the grip has been established, and to take for granted the preceding movement toward this grip. This force-directed design not only provides a good grip, but also allows minimization of the forces working within the mechanism, so that wear and tear of many parts, as well as the weight of the mechanism, can be severely reduced.

To ensure that a proper distribution of forces on the object being held is possible, the hand is made adaptive. This means that the hand has several independently movable fingers with multiple phalanges, instead of rigid fingers and only the thumb moving, as is the case in many existing devices. This way, the fingers can grasp much better around the object to ensure a good grip. In addition, the contact area between an object and the prosthesis is much larger. For synthetic materials like polyvinyl chloride (PVC), the friction force—and thus the amount of mass that can be held—depends not only on the applied pinching force, but also on the size of the contact surface. Since the cosmetic glove is made of PVC, the enlarged contact area will therefore lower the required operating force. Furthermore, the adaptive prosthetic hand behaves much more like the human hand, and the extent of hand opening is greater, allowing larger objects, like wine bottles, to be held.

Force-directed Design

To obtain useful feedback of the applied pinching force to the muscles that pull the operating cable, the force transfer ratio needs to be constant; therefore, it needs to be independent of the finger positions. In other words, no matter whether a large, square object or a small, round object is grasped, the pinching force on the object should always be the same when a certain operating force (tendon force) is applied, as shown in **Figure 2**.

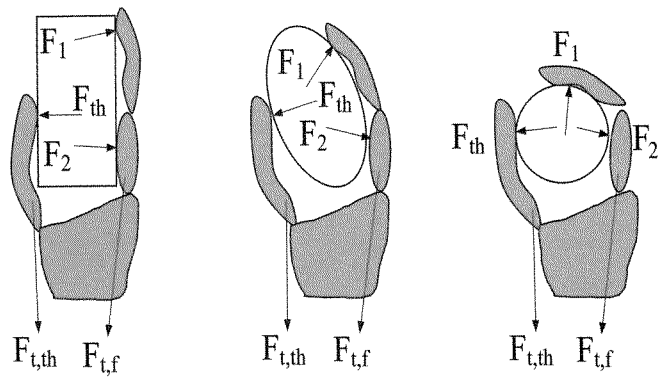

Figure 2.
With force-directed design we can aim for position-independent force feedback, which means that the ratio of the total pinching force ($F_1+F_2+F_{th}$) and the operating, or tendon forces ($F_{t,th}+F_{t,f}$) is constant, regardless of the size or shape of the object.

A second necessity for good force feedback is the elimination of disturbing influences like friction in the joints. Friction can be eliminated largely by using rolling links (9) instead of slide bearings. The main advantage of rolling links over slide bearings is that they have very little friction, even under heavy load, whereas the friction in slide bearings increases with increasing load. Experiments by Kuntz (9) have shown efficiency for rolling links of over 95 percent. A high efficiency might also be obtained by using ball bearings, but these are too sensitive for sand, moisture and sweat—materials that always seem to find their way into prosthetic devices—whereas they hardly affect the performance of rolling links.

In the proposed design, the fingers consist of two phalanges, although human fingers have three. The middle and distal phalanx are joined because flexing of the distal phalanx does not occur often—only if a fist is made—nor will it increase the contact surface much, so there is no need for it in a prosthesis. The thumb in this design has only one phalanx instead of two. Because the thumb is quite short, it is likely that splitting it into two phalanges will not increase the contact surface much; therefore, this was omitted.

The preceding considerations lead to a conceptual finger design as in **Figure 3a,** where the primary aim has

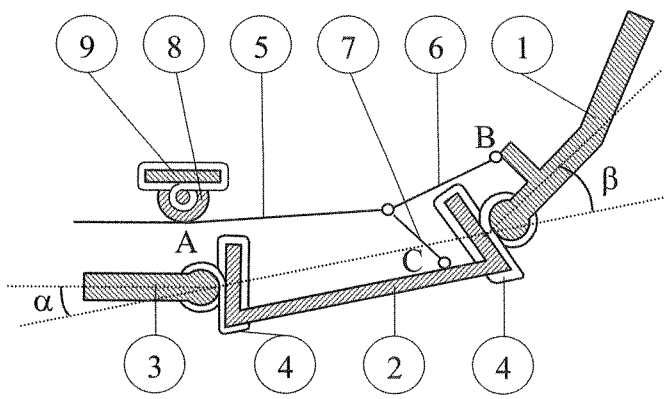

Figure 3a.
Design of a two-phalanx finger. 1, distal phalanx; 2, proximal phalanx; 3, metacarpal; 4, rubber band; 5, main tendon; 6, distal tendon; 7, proximal tendon; 8, cylinder; 9, small plane; A, B, and C, tendon attachment points; α, angle between metacarpal and proximal phalanx; and β, angle between proximal and distal phalanges.

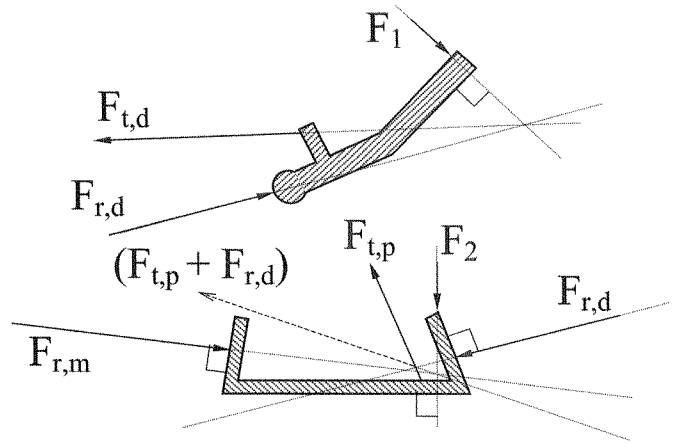

Figure 3b.
Configuration of forces on both phalanges, when the finger is pinching, while shown standing in its resting position. F_1, F_2, pinching forces; $F_{t,d}$, $F_{t,p}$, distal and proximal tendon forces, respectively; $F_{r,d}$, $F_{r,p}$, distal and proximal reaction forces, respectively.

been to achieve an optimal configuration of forces both on the object being held and within the mechanism. When the finger flexes, the distal phalanx rolls over the contact surface of the proximal phalanx and the proximal phalanx rolls over the metacarpal. To prevent the parts from slipping, the shear forces should be minimized. To do this, the contact surfaces have not been placed perpendicular to the longitudinal direction of the proximal phalanx, but have been bent inwards over angles equal to the values of α and β when the finger is in its resting position. Therefore, the directions of the reaction forces of the distal phalanx and the metacarpal on the proximal phalanx, $F_{r,d}$ and $F_{r,m}$ in **Figure 3b,** are perpendicular to the contact surfaces when the finger is in its resting position. Consequently, the shear forces are very small in most of the possible finger positions and virtually zero in the resting position. What remains of the shear forces is absorbed by the rubber bands, which are wrapped around the rollers. These bands also hold the parts together when there is no pinch action. Though their deformation causes a small energy loss, it is low compared to the friction losses associated with slide bearings.

The main tendon, which splits into the two secondary tendons for the distal and proximal phalanges, distributes the operating force among the two phalanges. It is wrapped around a cylinder that rolls on a small plane connected to the metacarpal. The cylinder prevents the tendon from sliding across the inside of the glove, which would ruin both good force feedback and low operating force. The cylinder is kept in contact with the plane by a band, comparable to the rubber bands that keep the phalanges together. In addition, when the finger flexes, the cylinder is pushed against the plane by the tendon.

In **Figure 3b,** the forces on the two phalanges are shown in the situation where the finger is in its resting position and exerts force on an object. The forces F_1 and F_2 will be referred to as the pinching forces, although they are actually shown as the reaction forces the object exerts on the phalanges. The magnitudes of F_1 and F_2 are determined by the directions and magnitudes of the tendon forces $F_{t,d}$ and $F_{t,p}$ in the case of static equilibrium.

The coordinates of the three tendon attachment points (A, B and C) and the lengths of the distal and proximal tendons together determine how F_t, the operating force in the main tendon, will be divided into $F_{t,d}$ and $F_{t,p}$ in the distal and proximal tendons, and are therefore decisive for the magnitude of the pinching forces F_1 and F_2. A computer model has been made to optimize these variables to get a constant transfer ratio $(F_1+F_2)/F_t$ for a variety of finger positions. It was assumed that for many frequently occurring grips the angles α and β are approximately equal. This assumption was based upon personal observations of many activities of daily living and upon the observation by Van Lunteren (6) that many of the objects grasped with a prosthesis have a cylindrical shape. For this situation (α=β), the force transfer ratios are plotted in **Figure 4a** as a function of the sum of the angles α and β. It shows

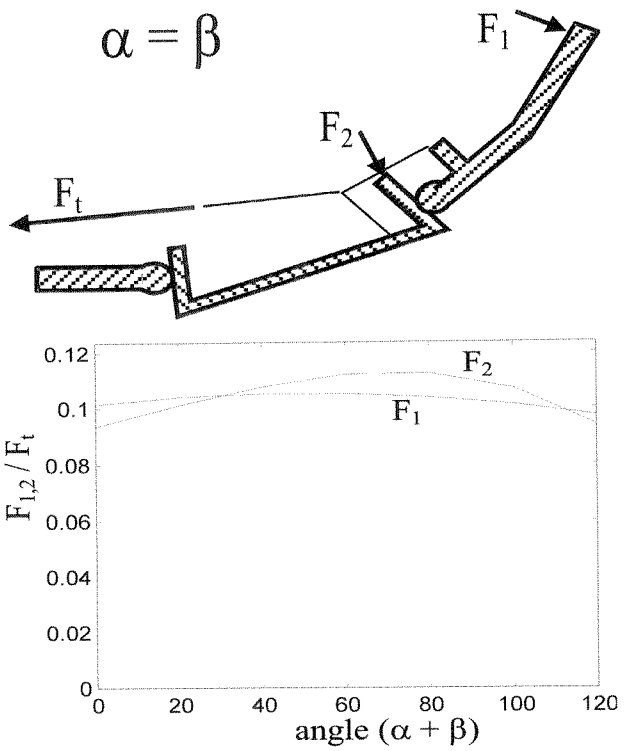

Figure 4a.
Force transmission ratio as a function of $\alpha+\beta$.

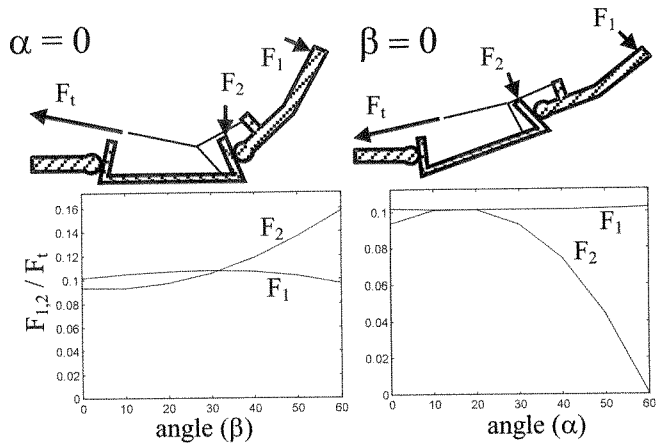

Figure 4b.
Force transmission ratio when either α or β is zero.

that as F_t remains constant, both F_1 and F_2 vary only slightly over a total range of 120º. Most deviation occurs in the extremely flexed or extended finger positions, whereas for most common grips the angle between the distal phalanx and the palm of the hand is somewhere between 40–80º. Within this range, the variation in the pinching force is about 5 percent.

In the extreme cases, rotation about only one joint would occur, as shown in **Figure 4b**. If α would remain zero, an increase of β would increase the force, F_2, and thus the moment about the proximal rotation point. When no object is present, it would increase the acceleration about the proximal rotation point. In case β would stay zero, an increase of α would decrease the force, F_2, or the acceleration about the proximal rotation point. The diagrams show that in both cases the moment about the distal rotation point does not change much. Since F_1 and F_2 as well as their moment arms are approximately equal, the resulting moments or accelerations are also approximately equal. This means that when activated without an object present, the finger prefers to move in such a way that $\alpha=\beta$. This movement looks very natural and thus suits our purposes well. More importantly, the finger will prefer to get a grip on an object with α and β equal, the position for which the force transfer ratio has been optimized.

Looking at the control of the finger, we notice that one tendon, after being split in two, drives two different parts. As stated by Laliberté (10), this underactuation leads to shape adaptation and thus results in a large contact surface between prosthesis and object.

Zooming out to the entire hand, one should realize that there is a driving tendon for each finger. It was decided to have three actively operated fingers, so there is a tendon for the thumb, one for the index and one for the middle finger, whereas there is only one operating cable. The operating force is evenly distributed among the two fingers and the thumb through a small triangle, as shown in **Figure 5a**. The equilibrium is unaffected by the spatial orientation of the triangle, and therefore the force distribution is independent of the finger positions. When a small object is held between thumb and index finger, the middle finger will continue to flex until the triangle is rotated into the position shown in **Figure 5b**. In the ideal case, this would require zero force. Now, all of the operating force is divided among the thumb and the index finger.

Glove Compensation

The fingers of the cosmetic glove collectively have a resting position that closely resembles the resting position of the human hand. When a finger is moved out of position, one side of the glove finger is compressed, while the other side is stretched. This deformation of the glove material requires a lot of force and thus ruins the force feedback. To prevent this, a mechanism is intro-

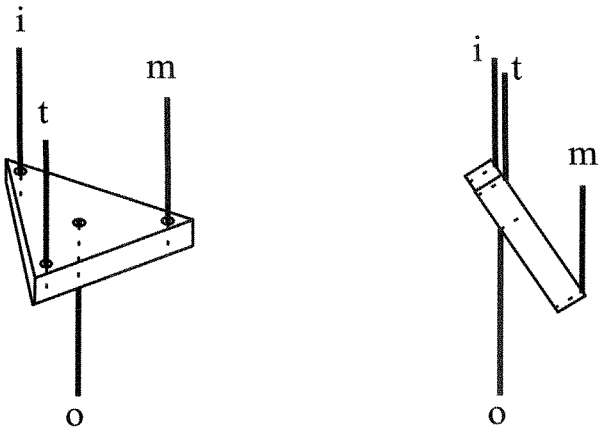

Figure 5.
Triangle distributing the operating force from the operating cable (o) to the thumb tendon (t), the index tendon (i) and the middle finger tendon (m). Left: holding a large object; right: holding a small object between the thumb and the index finger only.

duced that counteracts the behavior of the glove. In **Figure 6a,** the glove is modeled by two springs which have their minimum lengths when the finger is in its resting position. When the finger is either flexed or extended the springs are stretched, thereby counteracting the movement, similar to the action of the glove itself. As described by Herder (11), these springs can be compensated almost ideally if two springs are introduced that act in a manner exactly opposite to the glove springs. These

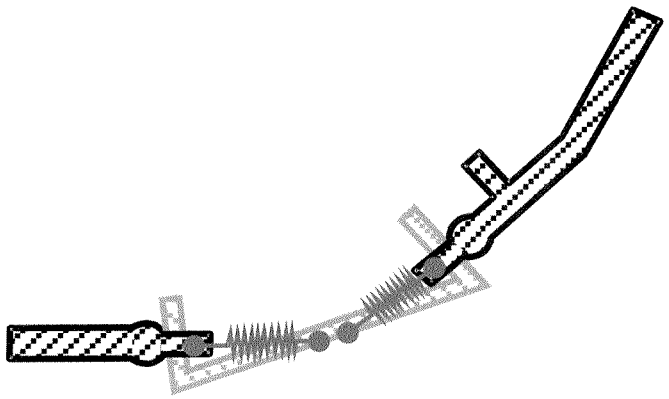

Figure 6a.
Modeling of the glove by one spring for each joint.

compensation springs are fully stretched when the finger is in its resting position and thus want to either fully bend or fully extend the finger (**Figure 6b**). The further the finger is flexed, the larger the moment arms of the compen-

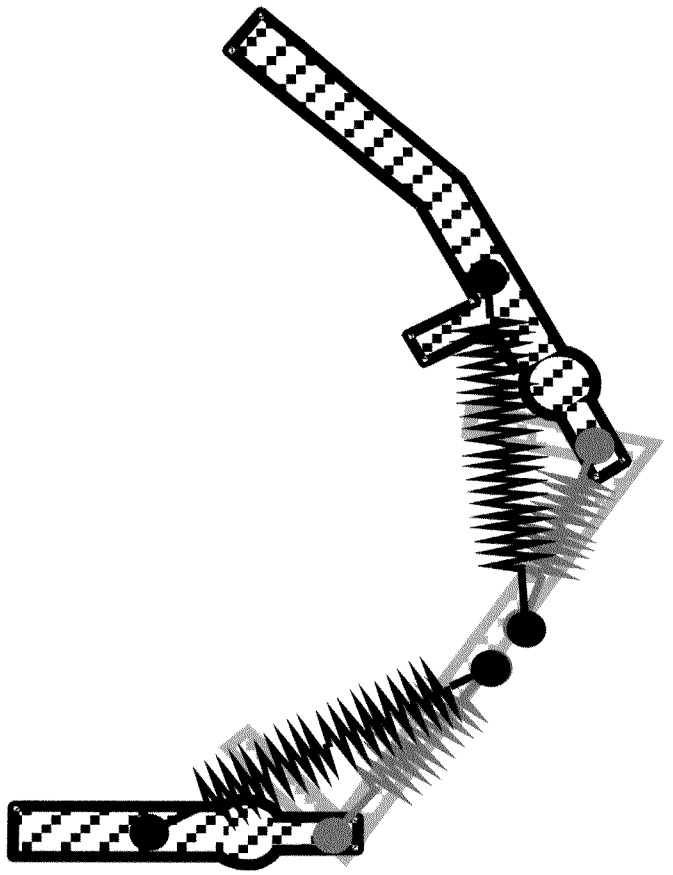

Figure 6b.
The glove is compensated by two springs that counteract the two springs that represent the glove.

sation springs become. This increases the resulting moments, an outcome which is necessary to compensate for the increased moments required to flex the glove further. In the ideal situation, the glove and the compensation springs would always be in balance, so it would take no force to push the finger in any arbitrary position. This, however, is not the case because the glove material behaves like a non-linear spring with a lot of hysteresis (12), meaning that the force required to flex the material is much higher than the force produced by the material when it moves back to its resting position. In **Figure 6c,** two pictures of a part of a finger with a surrounding glove illustrate the working of the compensation springs.

In **Figure 7a** the characteristic of one joint of a glove finger is compared with the characteristic of the suggested compensation mechanism. The resting position of the glove is approximately in the center of the figure. The continuous thick line represents the moment required to flex the glove finger as a function of the rotation angle

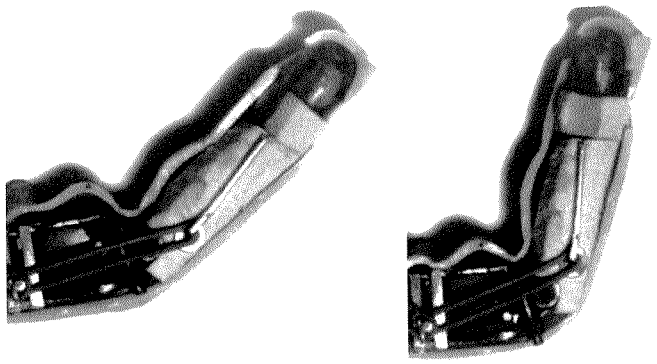

Figure 6c.
The actual interphalangal joint with the compensation rubber band and a cross-section of the surrounding glove. At left, the finger is in its resting position. The compensation rubber band now passes right over the rotation point. At right, the finger is in a flexed position. The glove is stretched and tends to move the finger back to its resting position, while the rubber band tends to flex it even further.

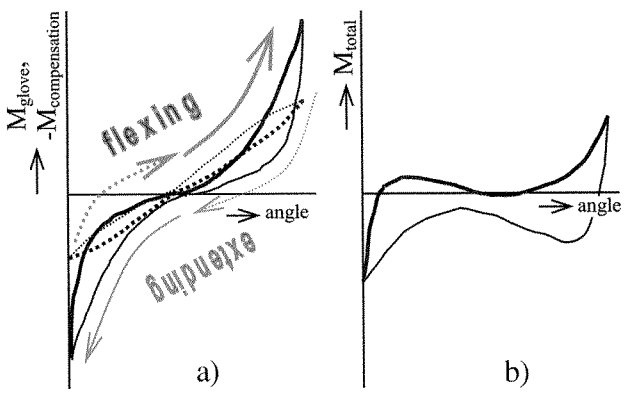

Figure 7.
a) Comparison of the characteristics of the glove and the compensation mechanism. The solid arrows mean that the glove requires a moment to move, the dotted arrows mean that the glove provides a moment that moves the finger; b) Total moment required to flex the compensated glove finger ($M_{glove} - M_{compensation}$).

(an angle equaling 0º means a fully extended finger). Since the glove finger will tend to move back to its resting position when released from its fully extended position, the mentioned required moment is negative from an angle of 0º until the resting position. The continuous thin line represents the moment produced by the glove finger as it moves back to its resting position after being released from its fully flexed position. As the finger is extended past the resting position, the glove will no longer produce a moment, but will oppose the movement. The mentioned produced moment thus becomes negative from the resting position until an angle of 0º. The dotted thick line represents the moment produced by the compensation springs to flex the finger from its resting position. The dotted thin line represents the moment required to stretch the compensation springs when the finger is extended back to its resting position. As the finger is extended passed the resting position, the compensation springs will support this movement and the mentioned required moment becomes negative.

The area between the continuous thick "flexing" line and the continuous thin "extending" line is the energy loss or hysteresis of the glove finger. The ideal characteristic of the compensation would be when the compensation's dotted thick "flexing" line exactly matches the glove's continuous thick "flexing" line. However, it is not easy to create a simple mechanism with such a non-linear characteristic. Nevertheless, the compensation mechanism has a characteristic that resembles that of the glove quite well in a large part of the working range of the finger.

The difference between the continuous thick line and the dotted thick line in **Figure 7a** represents the moment required to flex the finger; the difference between the continuous thin line and the dotted thin line in **Figure 7a** is the moment required to extend the finger. These moments are shown in **Figure 7b**. It is apparent that flexing the finger requires only a small moment in a large part of the working range; thus, good force feedback during pinching is preserved.

However, when the operating force is removed by relaxing the operating cable, the fingers will not move back to their resting position, since this takes a rather large moment, as can be seen in **Figure 7b**. Thus the hand will not open automatically and release the object. Nor are tendons present to extend the fingers, because this would make the mechanism much more complicated, and it would most likely increase the disturbances in the mechanism. However, the fact that the hand does not open automatically is not necessarily a problem, since it was assumed that in most cases either the other hand pushes the object into and pulls it out of the prosthesis (indirect grasping), or the prosthesis is pushed onto and pulled from the object. This has two advantages. First, one of the major problems of voluntary closing devices is solved, namely, the traditional, fully opened resting position of the hand; it is replaced by a natural looking, slightly opened resting position. Second, almost the entire energy loss or hysteresis of both glove and compensation mechanism, which is the enclosed area in **Figure 7b,** is

filled externally, usually by the sound hand. Because the energy provided by the elbow or shoulder is almost completely used for pinching, both good force feedback and low operating force are achieved.

Supporting Function

A problem with voluntary closing devices is that they can be fatiguing when holding a heavy object for a long time. Usually it is held almost solely via friction and, therefore, needs a constantly applied pinching force. Research into the functioning of the human hand by Hoefman (13) showed that whereas the index, the middle finger and the thumb are used mainly for pinching, the ring finger and the little finger are used more for support. This idea can be applied to our prosthesis by simply limiting the design of the ring finger to two distinct positions: an extended position, in which the ring finger does not interfere with the pinching function of the index, the middle finger and the thumb; and, a flexed position, in which it supports a held object and only a small pinching force is required to balance the object on the ring finger. This makes it much less tiring to hold an object for a long time. This result could also be achieved with a locking mechanism. However, the advantage of a supporting finger over a locking mechanism is one of safety: in case of an emergency, the prosthesis can immediately be pulled from the object, as no action is required to unlock. The disadvantage is that when the hand is rotated such that the ring and little fingers are not at the bottom side, the supporting function is lost and pinching force is required. Clinical trials will have to assess the degree of discomfort this will cause.

The fact that the ring finger has to be pushed from one position into the other by the sound hand does not make control more difficult, because when the sound hand puts something into the prosthesis, it only takes a minor additional action to push the ring finger into its supporting position.

Flexibility

The last feature of the design presented in this paper is its flexibility. This manifests itself in two ways, namely, in the flexibility of the entire hand, i.e., the mobility of the fingers relative to each other, and in the flexibility of the separate fingers, i.e., the mobility of the phalanges relative to each other and to the metacarpal.

The flexibility of the entire hand makes it feel much softer and thus more natural than the common, hard prosthetic hands. It also allows the mechanism to be compressed slightly, which makes it much easier to slide the mechanism into the glove, thus easing the job of the prosthesist. The flexibility of the entire hand has three features. First, the ring finger is connected to the wrist by a flexible strip, allowing it to move toward the middle finger, but not forward and backwards. The glove prevents the ring finger from bending toward the little finger, so the supporting function is not jeopardized. Second, as the little finger has no active function in the prosthesis, it consists of compressible, filler material only. Third, the thumb can be dislocated temporarily to ease the insertion of the mechanism into the glove. This dislocation cannot happen during normal operation, because it requires movement against the direction of the load.

The flexibility of the separate fingers is a result of the fact that the bands that keep the rolling parts together are flexible. This allows the phalanges to slide and twist a bit relative to each other and to the rest of the hand, giving the fingers a soft, more natural feel. However, when the operating cable is pulled, the tendon pulls the phalanges firmly against each other. This gives the fingers enough lateral stiffness to ensure a good grip. The lateral stiffness turned out to be sufficient to hold a full wine bottle (0.7 l, approximately 1.1 kg) without collapsing. This further illustrates that the operating force is used not only to drive the mechanism, but also to stabilize the rolling joints.

RESULTS

A simple prototype was built based on the concepts mentioned (**Figure 8**). Several tests have been performed with this prototype, though it was not yet suitable for the most important test, namely, being used by an amputee. The following properties were measured:

- the force transfer ratios of the separate fingers; i.e., the practical equivalent of the theoretical results of **Figure 4**
- the energy loss during the closing of the hand; i.e., the area in **Figure 7b** between the upper curve and the horizontal axis.

Together, these two properties give a good indication of the quality of the force feedback in the mechanism. The energy loss during opening of the hand was not measured, since the sound hand is usually used to open the hand.

The force transfer ratios of the separate fingers were measured both with and without the cosmetic glove pre-

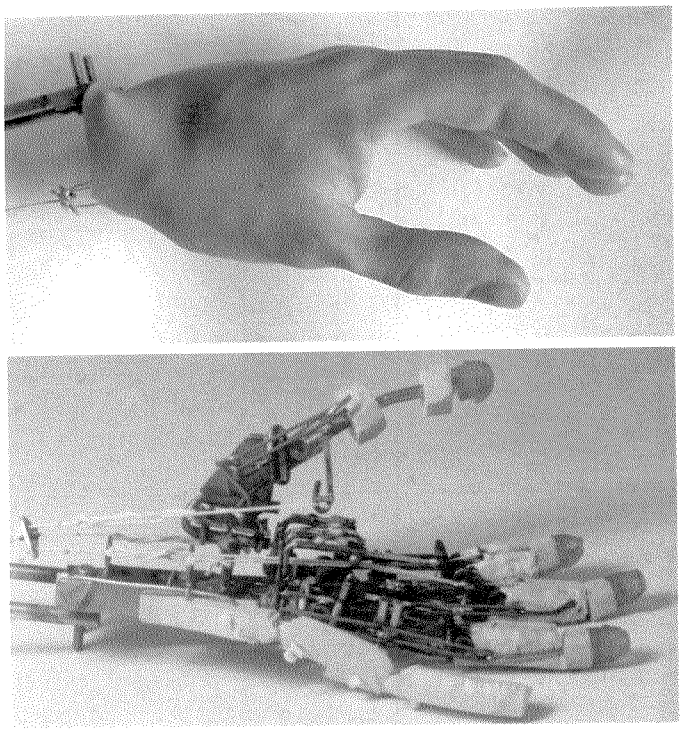

Figure 8.
The prototype with and without the cosmetic glove. To the far left the triangle that distributes the operating force.

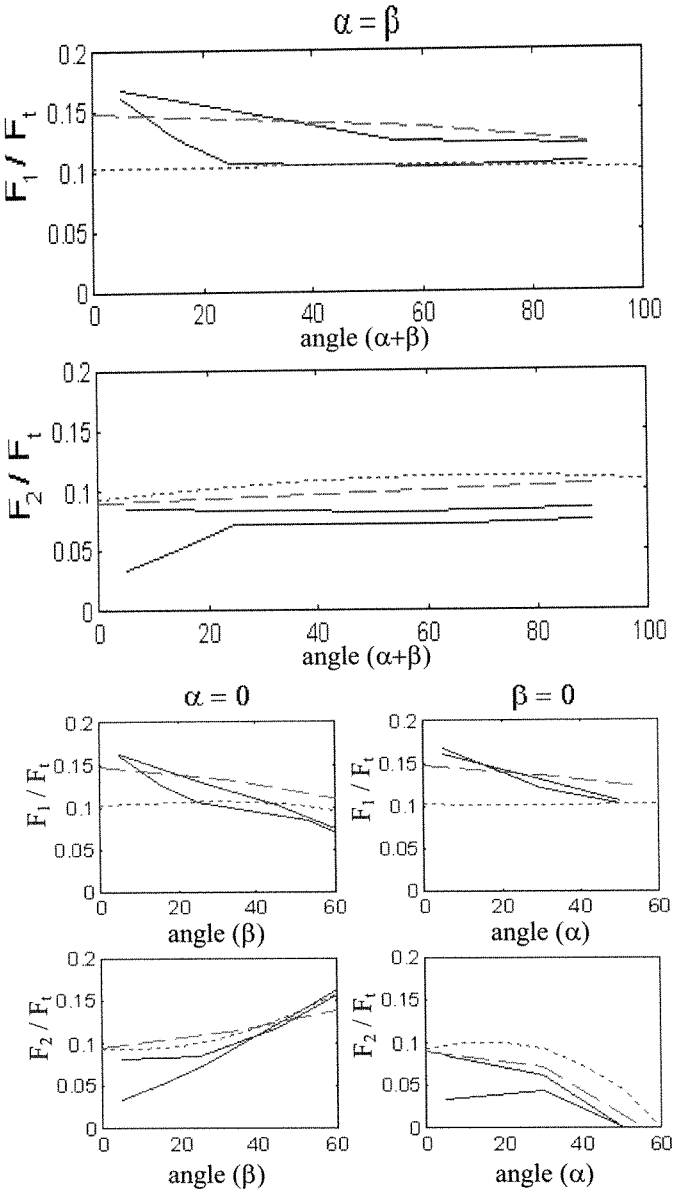

Figure 9.
Force transmission ratios as a function of finger position. The dotted lines are the theoretical values as in **Figure 4**. The dashed lines are the measurements done on the mechanism without the glove and the compensation springs; the solid lines are the maximum and minimum measurements with the glove present. Top two figures: the transfer ratios in the situation for which the design was optimized ($\alpha=\beta$). Bottom four figures: the ratios in the extreme situations: $\alpha=0$ (left figures);$\beta=0$ (right figures).

sent. In **Figure 9,** the dotted lines are the theoretically calculated transfer ratios, which were shown earlier in **Figure 4**. The dashed lines show the transfer ratios measured without the glove and the compensation springs. In the most common case, when $\alpha=\beta$ (top two figures), the dashed lines are horizontal, meaning that the ratios hardly depend on the finger positions. The solid lines show the ratios of the mechanism with the glove and compensation springs. Due to hysteresis, the individual measurements are not exactly equal. The two solid lines in each plot represent the two extreme (i.e., minimum and maximum) measurements. The lines show that when the finger is fully extended ($\alpha+\beta=0$), the force transfer ratio F_1/F_t is a bit higher than in the situation without the glove. In other words, the glove provides a bit of additional pinching force, as its tendency to move back to its resting position is not completely neutralized by the compensation mechanism. When the finger is flexed beyond its resting position, the transfer ratio F_1/F_t becomes a little lower than without the glove, as the glove opposes this movement. Therefore, it can be concluded that, in this case, the glove compensation mechanism is not performing optimally. Nevertheless, the transfer ratio turns out to be quite constant over a large range of finger positions. Only when the finger is almost fully extended does F_1 become larger than expected; however, since F_2 is lower than expected in this case, the total pinching force remains

constant. Consequently, the force feedback is quite independent of the size and shape of the object held.

In the ideal situation, closing of the hand would require no force at all. However, as shown earlier in **Figure 7,** there is only limited glove compensation in the extreme positions of the finger, so in particular when thin, light objects are held, a relatively large part of the operating force is used for moving the fingers instead of pinching. Closing the hand, i.e., making contact between the tips of the fingers and thumb, takes about 3–4 N of operating force—about 1.5 N per finger and about 0.5 N for the thumb. This is significantly lower than the amount of force it would take without any compensation, which is well over 10 N. This means that, with a total force transfer ratio of about 0.2–0.25, a total of some 0.6–1.0 N of pinching force is lost in the worst case.

DISCUSSION

Field research by Van Lunteren (6) revealed that in almost all cases the user does not grasp things directly with his prosthesis, but either pushes his prosthesis onto the object or pushes the object into the prosthesis with his other hand. Based on this so-called indirect grasping, focus has shifted from optimizing finger movements to optimizing the configuration of forces in and on the prosthesis. This force-directed design has resulted in a much better feedback of the pinching force with preservation of natural-looking movements. Improved feedback gives the user much better control over the object held. This will make use of the prosthesis easier and more natural looking, an aspect that has proved to be of great importance to many users.

A second—and the most obvious—way of achieving a more natural look is the use of a cosmetic glove. This, however, causes several new problems, as the stiff material of which these gloves are made deforms severely during movement of the mechanism, causing great energy losses. A compensation mechanism was introduced that significantly reduced those energy losses, since it stores energy released when the hand relaxes and uses it when the fingers are flexed again. The considerable reduction of the main disturbing influence leads to improved feedback of the pinching force. In addition, the required operating force was much lower, which should make the prosthesis more comfortable to use.

The prosthesis was made both adaptive and flexible to make it look, behave and feel more natural and to improve the grip on an object. Where most traditional devices have only two contact points with the object, an adaptive and flexible device grasps much more around the object. This increases the contact surface, which leads to less required pinching force and thus a lower operating force. The adaptivity does not make the mechanism more complicated. Each finger consists of only two parts that roll on one another, a couple of bands to keep them together, a tendon to move them and a pair of elastics that function as compensation springs. The flexibility of the entire mechanism made it much easier to slide into the cosmetic glove, thus easing the job of the prosthesist. Finally, the ring finger was given a support function.

The concept of force-directed design has led to a very efficient prosthesis with a natural look and feel, but it is difficult to judge in advance how users will react to a prosthesis whose design is based specifically on the idea of indirect grasping. The simple prototype is not yet suited for field evaluation, as it was primarily built to test and improve the design philosophies and principles presented earlier. Reliability and durability tests have not yet been performed. In particular, it remains to be seen whether the rubber bands will last an acceptable time under conditions of daily use. However, the Wilmer group has had good experiences with the application of rubber bands in elbow ortheses. For now, the prototype can only be judged based on limited laboratory measurements. When looking at the results of these measurements, one should realize that it was a first prototype, built with simple tools. A more professional design and production will most likely improve its performance. The results look promising, but cannot be directly compared to measurements done on existing devices, because of the fundamental differences in design and manner of use. For example, the idea of indirect grasping allows us to have almost all energy losses filled by the sound hand, making the prosthesis itself quite energy efficient. Since no clinical trials have been done, it is not known how easily the prosthetic hand can be positioned. The design presented here deals with the hand mechanism only. It is the opinion of the authors that the ease of positioning is mainly influenced by the kind of operating cable control that is chosen: shoulder control, elbow control, and so forth.

CONCLUSION

Just before this project started, an inquiry was held among several rehabilitation groups (14). Besides cosmetics and wearing comfort, good feedback of the pinch-

ing force was considered quite important. The idea of designing a prosthesis based on indirect grasping led to mostly positive reactions, since most members of the rehabilitation groups regarded it to be quite logical. We are, therefore, very curious about the opinions of persons with amputations regarding the prototype presented here.

ACKNOWLEDGMENTS

The authors gratefully acknowledge Professor Jan C. Cool and Jan Verbeek who initiated some of the ideas presented here and the other members of the Wilmer Group for their everlasting support. Furthermore, the clinical input by the Dutch rehabilitation centers "De Hoogstraat" in Utrecht and "Maartenskliniek" in Nijmegen is highly appreciated.

REFERENCES

1. Plettenburg DH. Basic requirements for upper extremitiy prostheses: the Wilmer approach. In: Proceedings of the 20th Annual International Conference of the IEEE Engineering in Medicine and Biology Society; 1998 Oct 29-Nov 1, Hong Kong. Picataway, NJ: IEEE; 1998. p.2276–81.
2. Kruit J, Cool JC. Body powered hand prosthesis with low operating power for children. J Med Eng Tech 1989;13(1/2):129–33.
3. Radocy B. Voluntary closing control: a successful new design approach to an old concept. Clin Prosthet Orthot 1986;10(2):82–6.
4. Murphy EF. Manipulators and upper-extremity prosthetics. Bull Prosthet Res 1964; Fall: 107–17.
5. Fletcher MJ. New developments in hands and hooks. In: Klopsteg PE, Wilson PD., eds. Limbs and Their Substitutes. Reprint of 1954. New York: Hafner Publishing Company; 1968. 222–38.
6. Van Lunteren A, Van Lunteren-Gerritsen GHM, Stassen HG, Zuithoff MJ. A field evaluation of arm prostheses for unilateral amputees. Prosthet Orthot Int 1983;7:141–51.
7. Hirose S. Biologically inspired robots. Oxford: Oxford University Press; 1993. p.126–86.
8. Figliolini G, Ceccarelli M. A motion analysis for one degree of freedom anthropomorphic finger mechanism. In: CD-ROM Proceedings of Design Engineering Technical Conferences (DETC); 1998, Atlanta, GA; 1998. New York: ASME; 1998. MECH-5985.
9. Kuntz JP. Rolling link mechanisms (PhD thesis). Delft, Netherlands: Delft University of Technology; 1995.
10. Laliberté T, Gosselin CM. Simulation and design of underactuated mechanical hands. Mech Mach Theory 1998;33(1/2):39–57.
11. Herder JL. Design of spring force compensation systems. Mech Mach Theory 1998;33(1/2):151–61.
12. Herder JL, Cool JC, Plettenburg DH. Methods for reducing energy dissipation in cosmetic gloves. J Rehabil Res Dev 1998;35(2):201–09.
13. Hoefman M. Handprothesen, adaptatie of specialisatie (MSc thesis). Amsterdam: Faculty of Movement Sciences, Vrije Universiteit; 1994.
14. Herder JL, Cool JC, Plettenburg DH. Voluntary pinching. In: Proceedings of the 9th World Congress of the International Society for Prosthetics and Orthotics (ISPO); 1998 Jun 28-Jul 3, Amsterdam, The Netherlands; 1998.p. 446–68.

Submitted for publication May 26, 1999. Accepted in revised form October 22, 1999.