Department of Veterans Affairs

Journal of Rehabilitation Research and Development
Vol. 39 No. 1, January/February 2002
Pages 83–93

Preliminary evaluation of wheelchair occupant restraint system usage in motor vehicles

Linda van Roosmalen, PhD; Gina E. Bertocci, PhD; Douglas A. Hobson, PhD; Patricia Karg, MS
Department of Rehabilitation Science and Technology, University of Pittsburgh, PA

Abstract—Individuals using wheeled mobility devices (WMDs) often use them as motor vehicle seats during transportation. Wheelchair occupant restraint systems (WORSs), consisting of upper torso and pelvic restraints, are usually mounted to the structure of transit vehicles to secure individuals within their wheelchair seats. This preliminary study attempts to evaluate the use and satisfaction of currently installed vehicle-mounted WORSs for individuals using WMD as seats in motor vehicles. A survey was conducted among 33 adults who use their WMD to travel in motor vehicles. Results from the survey showed that upper torso and pelvic restraints installed in private vehicles are quick, comfortable, and easy to use. However, WORS installed in mass transit and paratransit are often uncomfortable to wear, difficult to reach, and time-consuming to use. This preliminary study documents the growing need for developing alternative WORS that are safe, comfortable, and that allow independent usage for wheelchair occupants while traveling in a motor vehicle.

Key words: *comfort, lap belt, occupant restraint, safety, shoulder belt, transportation, WC-19, wheelchair, wheelchair standards.*

Address all correspondence and requests for reprints to Linda van Roosmalen, PhD, Department of Rehabilitation Sciences and Technology, 5044 Forbes Tower, University of Pittsburgh, PA, 15260; email: lvanroos@pitt.edu.

INTRODUCTION

The National Highway Traffic Safety Administration presents the following facts on the effectiveness of seat restraint (safety belt, existing of a pelvic and shoulder belt) use (1):

- Seat restraints appear to be the most effective safety devices in vehicles today.
- It is estimated that the use of seat restraints saves 9,500 lives each year.
- In 1996, more than 60 percent of the occupants killed in fatal crashes were unrestrained.
- If 85 percent of Americans buckled up, 4,100 additional deaths would be prevented (102,000 additional injuries annually).
- Failure to use a seat restraint contributes to more fatalities than any other single traffic safety-related behavior.

In 1992, it was estimated that 1.4 million people use wheeled mobility devices (WMDs) in the United States (2). This number of individuals is still growing, and many of these individuals are likely to use a motor vehicle to get from point A to B with their wheelchair. A study conducted by Shaw reviewing various sources on wheelchair rider accident information showed limited data on motor-vehicle-related accidents among wheelchair users (3). Statistics on injuries or death to wheelchair users involving motor vehicles were obtained

through the National Electronic Injury Surveillance System (NEISS) (4). Data were collected from hospital emergency rooms and follow-back phone interviews and investigations with injured persons or witnesses. A number of 2,494 persons were injured or killed over a 5-year period as a result of improper or no securement of the wheelchair occupant. Of the 2,494 cases in which wheelchair users were injured or killed, 65 percent involved vans, 18 percent involved ambulances, and 17 percent involved buses. Numbers of wheelchair occupants involved in motor vehicle accidents might be higher than indicated here, since the NEISS study did not include medical facilities without emergency care, and it focused primarily on injuries involving consumer products rather than motor vehicles, and motor vehicle incidents may not have been included in the numbers (4).

For individuals using their WMD as motor vehicle seats, buckling up may not be easy, safe, or comfortable, because of an often-decreased level of balance, strength, and/or range of motion. During transportation of WMD-seated individuals in motor vehicles, and particularly in a motor vehicle crash, loads acting on WMDs are different from those occurring during normal mobility use (5). WMDs are, in principle, designed to function as a mobility device and therefore may not comply with the requirements of an original equipment manufactured (OEM) vehicle seat. Therefore, an increased risk of occupant injury may exist when occupants are exposed to crash situations while seated in their WMD.

The American National Standards Institute (ANSI)/ Rehabilitation Engineering Society of North America (RESNA) Vol.1, part 19, "Wheelchairs Used as Seats in Motor Vehicles," standard (WC-19) promotes occupant safety for motor vehicle occupants who remain seated in their wheelchair during transit (6). This voluntary standard requires that a wheelchair designed for use in transportation be dynamically tested (20 g/30 mph or 20 g/ 48 km/h sled impact test) with a wheelchair-anchored pelvic restraint. The pelvic restraint segment of the standard has a phase-in period of 2 years starting April 2000. Currently, no provision exists for an upper torso restraint, but there is guidance on proper restraint fit in the appendices of the standard. A properly installed upper torso restraint prevents a wheelchair occupant from forward head and upper torso excursion, decreasing the risk of impacting the vehicle interior (7).

Previous studies have been conducted to evaluate the crashworthiness of wheelchairs and their various components (8–12). Efforts are also underway to establish design characteristics for transport-safe wheelchairs and seating systems so that they have the capability to withstand crash-level loads (9,10,13,14). Additional studies focusing on the usability and safety of wheelchair occupant restraint systems have been conducted. Bertocci et al., concluded from their studies that the location of the upper torso restraint anchor point influences wheelchair occupant crash protection (15,16). In 1994 a group of wheelchair users with spinal cord injury was surveyed. A number of 154 individuals responded on questions concerning the use of safety equipment, such as wheelchair tie-downs and occupant restraints (17). Sprigle et al., found that 70 percent of the individuals seated in their wheelchair in a privately owned van reported using wheelchair tie-down systems but that only 50 percent of the individuals used occupant restraints. They concluded, "this lack of occupant restraint use is clearly an issue that must be addressed through improved education and equipment design." In 1995 a group of 74 individuals using their wheelchairs as motor vehicle seats, reported difficulties with wheelchair securement systems as well as wheelchair occupant restraint systems (WORSs) in motor vehicles (18).

The Society of Automotive Engineers (SAE) J2249 and the WC-19 standard recommend restraint angles and anchorage locations for the pelvic and upper torso restraints as shown in **Figure 1** and **2** (6,19). Requirements for proper belt fit are as follows:

- The pelvic restraint should be worn low across the front of the pelvis, so that the angle of the pelvic restraint is within the preferred zone of 45° to 75° to the horizontal, or the optional zone of 30° to 45° to the horizontal (see **Figure 1**).
- Restraints should not be held away from the body by wheelchair components or parts, such as the wheelchair armrests or wheels.
- Upper torso restraints should fit over the shoulders so that in the frontal plane, the angle of the upper torso restraint is 55° to the horizontal (see **Figure 2**).
- Upper torso restraints should be adjusted as firmly as possible, consistent with user comfort.
- Restraint webbing should not be worn twisted in a manner that significantly reduces the area of contact of the restraint with the occupant.

A study conducted at the University of Pittsburgh (20) showed compromised belt fit when a

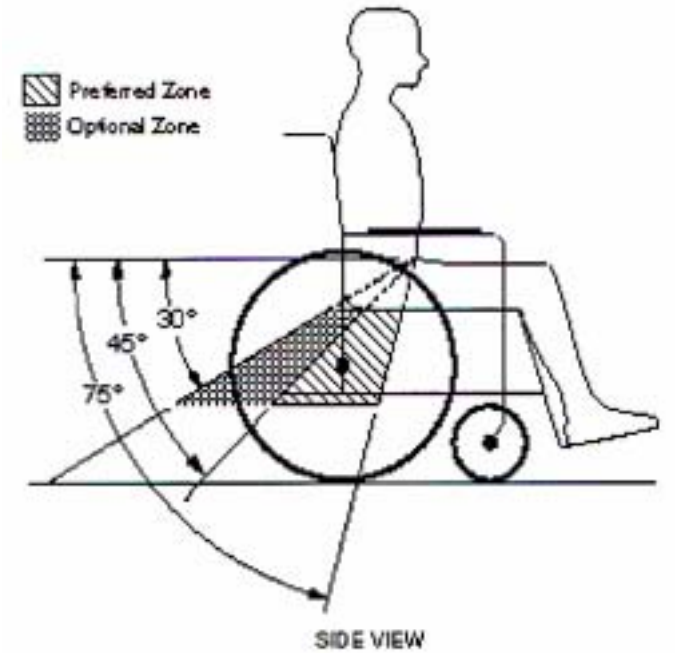

Figure 1.
SAE J2249 and ANSI/RESNA WC-19 zones of preferred and optional angles for pelvic restraints.

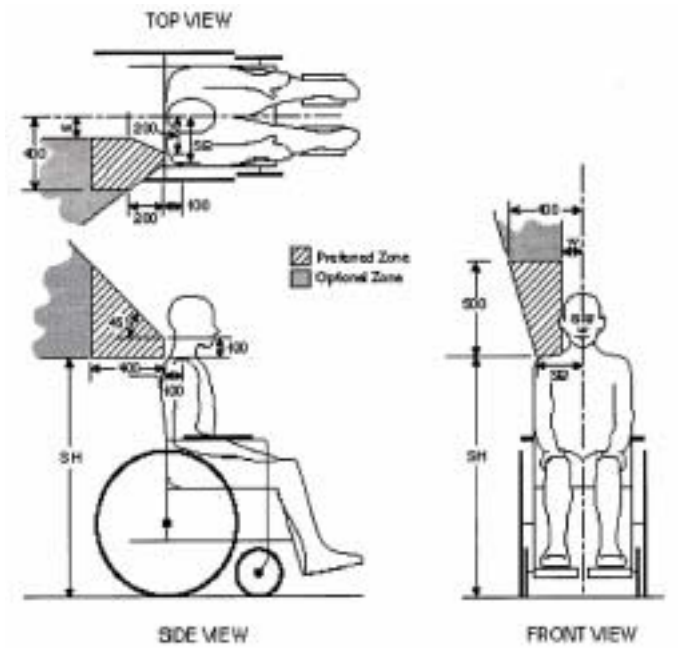

Figure 2.
SAE J2249 and ANSI/RESNA WC-19 preferred and optional zones for upper vehicle anchor point of upper torso restraint.

vehicle-mounted WORS was used for 50th percentile male users, 5th percentile female users, and 6-year-old children. A recent pilot study, also conducted at the University of Pittsburgh, looked at using a vehicle-mounted WORS by a trained driver to restrain three wheelchair users. The vehicle-mounted WORS consisted of a side-structure mounted upper torso restraint and a floor-mounted pelvic restraint. **Figure 3** shows that the pelvic restraint was positioned over the wheelchair armrests to restrain the individual. This unsafe restraint path could load the soft abdominal area during impact. The position of the restraint over the armrest could cause failure of the armrest during impact, impinging on the occupant.

Figure 4 shows that the upper torso restraint does not contact the shoulder and therefore would not prevent the upper body from moving forward in a motor vehicle frontal impact (15,16). The pelvic restraint was positioned over the soft abdominal area, instead of over the bony parts of the pelvis. This, together with the torso and pelvic restraint buckle location and the poor upper torso belt fit, increases risk of injury if this individual was subjected to an impact while seated in his or her wheelchair.

Finally, in **Figure 5**, an individual was seated in a WMD equipped with an Alternative Augmentative Communication (AAC) device. This individual maintained an upright posture by using her armrests and pillows on both sides of her body. This made it very difficult to restrain her with the available vehicle-mounted WORS. The pelvic restraint was therefore positioned around both armrests and did not contact the subject's lower body. The upper torso could not be restrained because the ACC device obstructed the torso restraint connector on the pelvic restraint. According to ANSI/RESNA WC-19, all three observations would be rated as being "poor to fair" restraint situations. Since the observed subjects were all power wheelchair users, this study does not represent the general population of wheelchair users in paratransit vehicles. However, it has been perceived that even a well-trained bus driver experienced difficulties restraining commonly used power wheelchairs and their occupants.

In a study conducted by Bertocci and Evans, a case was made for integrated restraints when comparing vehicle-mounted WORS and wheelchair-integrated restraint systems with the use of computer simulations (21). To increase seat restraint use and improve safety, comfort, and ease of use of upper torso and pelvic restraints,

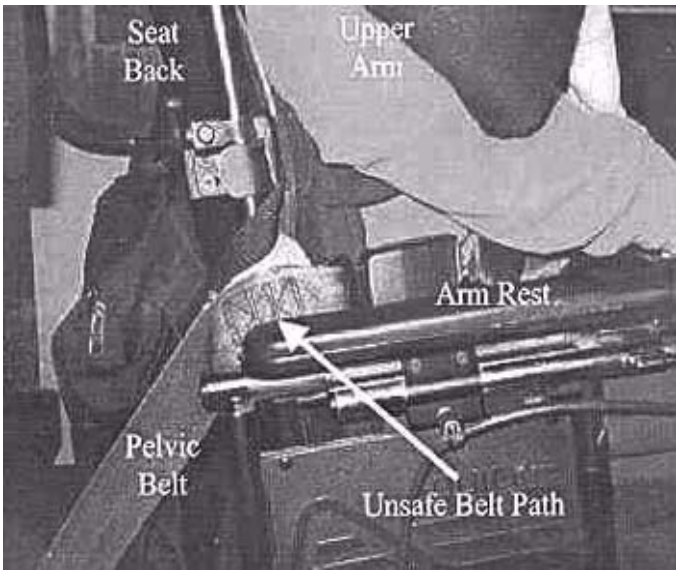

Figure 3.
Pelvic belt crosses over armrest of wheelchair.

Figure 4.
WORS pelvic belt buckle is located on abdominal area of individual. Upper torso restraint is located so as not to touch the shoulder.

current research is evaluating the feasibility of integrating the upper torso and pelvic restraint on the wheelchair frame itself (22). Much research has been done in the automotive industry on the benefits of seat-integrated occupant restraint systems (23–26). When this restraint technology is implemented in the wheelchair industry, similar improvements can be expected in frequency of restraint usage, safety, user comfort, and usability.

OBJECTIVES

Since minimal data are available on the use of WORS among wheelchair users, this study was conducted to obtain more information related to the use and satisfaction of upper torso and pelvic restraints for wheelchair users in motor vehicles. Details concerning the use, user comfort, and belt fit of vehicle-mounted WORS were investigated.

RESEARCH METHOD

During a meeting of the Pittsburgh Committee for Accessible Transportation of the demand route paratransit provider (ACCESS), individuals using WMDs were approached to participate in this study related to occupant restraint use. Fourteen adults agreed to participate in the study. The group included six males and eight females. The survey was also posted on the World Wide Web (WWW), where an additional 18 individuals volunteered to participate in the study (IRB#990680-9906). Only subjects who travel seated in their WMD completed the survey.

All subjects were asked to identify the type of transportation they used while seated in their WMD: paratransit, mass transit, private vehicle, or another type of vehicle. For each type of transportation system used, subjects were asked to complete several questions concerning the type of occupant restraint used, satisfaction of restraint use, comfort of the restraint system, and fit of the restraint that was used during transportation in the motor vehicle. A total of 44 surveys were completed. All responses to the survey remained anonymous. Information regarding the types of WMD used, gender, or type of disability of the individuals was not evaluated. In this qualitative study, subjects were asked to answer the restraint satisfaction questions with *yes*, *no*, or *I don't know*. Finally, an explanation for each given answer was required. The **Appendix** lists the survey questions.

All individuals used their WMD as their vehicle seat in one or more of the following forms of transportation:

- Demand route paratransit (16 completed surveys): A transit system that transports individuals with

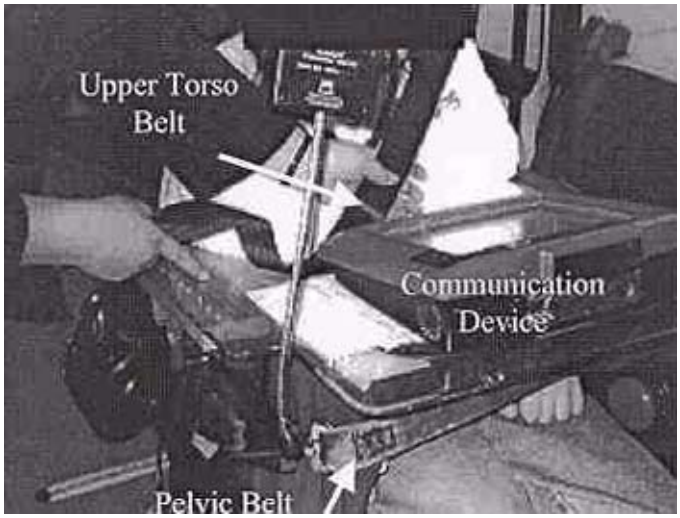

Figure 5.
A failed attempt was made to install pelvic and upper torso restraint on an individual using a power wheelchair equipped with a communication device, armrest, and batteries.

wheelchair lift-equipped vans. Strap-type wheelchair tie-down systems and restraint type occupant restraint systems are typically installed, consisting of pelvic and upper torso restraints (**Figure 6**).

- Fixed route mass transit (11 completed surveys): A transit system that transports individuals using wheelchair-lift-equipped full-size buses on a fixed route. Wheelchair securement areas within the buses are typically equipped with strap-type wheelchair tie-down systems and bus seat or vehicle-mounted pelvic and upper torso restraints. Flipping the vehicle seat upward accesses wheelchair securement stations. **Figure 7** shows a flip-up seat with an upper torso restraint anchor mounted to it. **Figure 8** shows the upper torso restraint anchored to the pillar between windows.
- Privately owned vehicles (15 completed surveys): Among privately-owned vehicles are vans equipped with strap-type tie-down systems or docking systems. Private vehicles are commonly equipped with three-point vehicle-mounted pelvic and upper torso restraints. The upper torso restraint anchor point is usually mounted to the vehicle structure, and the pelvic restraint anchor point is attached to the vehicle floor.
- Other vehicles (two completed surveys): Among this category are rental cars and vans. No further information regarding wheelchair tie-down systems and WORS was provided for this type of vehicle.

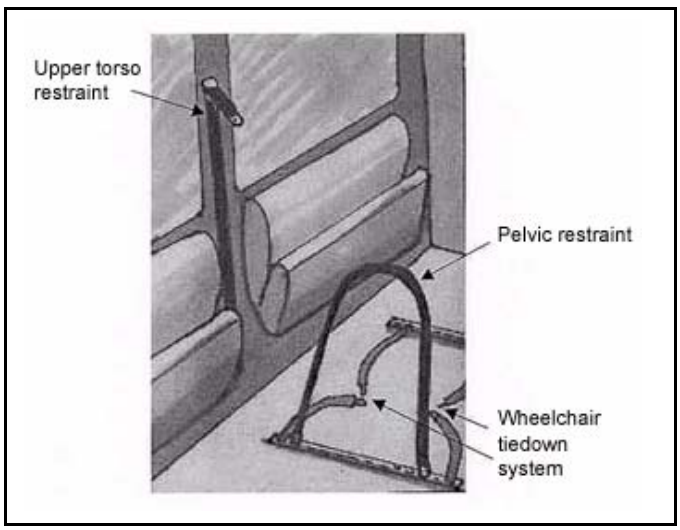

Figure 6.
Wheelchair securement station in a paratransit vehicle interior with an occupant restraint system mounted to vehicle structure.

SURVEY RESULTS

The **Table** shows the number of subjects and their occupant restraint usage in the vehicle types studied (paratransit, mass transit, privately owned, and other vehicles).

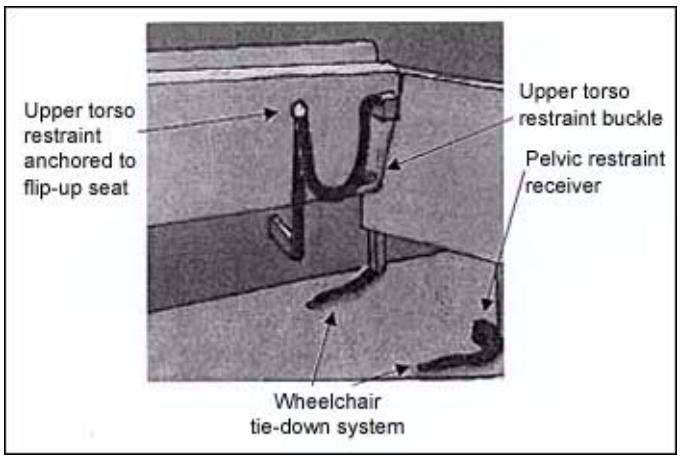

Figure 7.
Mass-transit vehicle with occupant restraint system mounted on flip-up seat.

Table.
Number of subjects and their reported occupant restraint usage and satisfaction in paratransit, mass-transit, privately owned, and other vehicles.

Usage Variables	Paratransit	Mass transit	Private vehicle	Other
Completed surveys (total = 44)	16	11	15	2
WORS users	13	7	12	1
No use of WORS	2	4	1	1
Positioning belt use	0	9	3	0
Pelvic and upper torso restraint use	10	3	9	0
Pelvic restraint use	3	1	3	0
Upper torso restraint use	0	0	2	0
Vehicle-mounted WORS	4	1	11	0
Choose not to wear WORS	9	11	5	2
User needs help	13	11	6	1
WORS is time-consuming to use	9	6	4	1
WORS quick to use	7	1	10	1
WORS provides good belt fit	7	4	9	1
WORS provides poor belt fit	8	3	4	1
WORS is comfortable	6	3	10	1
WORS is not comfortable	9	4	2	1
WORS is easy to use	13	6	10	2
WORS is difficult to use	3	3	3	0

The following paragraphs summarize the answers given to survey questions related to occupant restraint usage.

Questions 1–6

Paratransit Provider

A pelvic restraint is required when traveling with this transit provider. Thirteen out of sixteen subjects reported wearing an occupant restraint.

The use of the upper torso restraint is optional. Ten out of sixteen subjects reported wearing both pelvic and upper torso restraints, and three out of sixteen subjects reported wearing only the pelvic restraint without the upper torso restraint. None of the 16 subjects used their positioning belt as a safety restraint during transport.

Mass-Transit Provider

Of the 11 subjects, 7 reported not wearing any form of safety restraint during transport (except their positioning restraint mounted on the wheelchair, which was not impact tested with the wheelchair). One subject reported wearing only a pelvic restraint, and three subjects reported wearing both the pelvic and upper torso restraint installed in mass-transit vehicles. Nine out of eleven subjects reported using their positioning belt as a form of occupant restraint when traveling with a mass-transit vehicle.

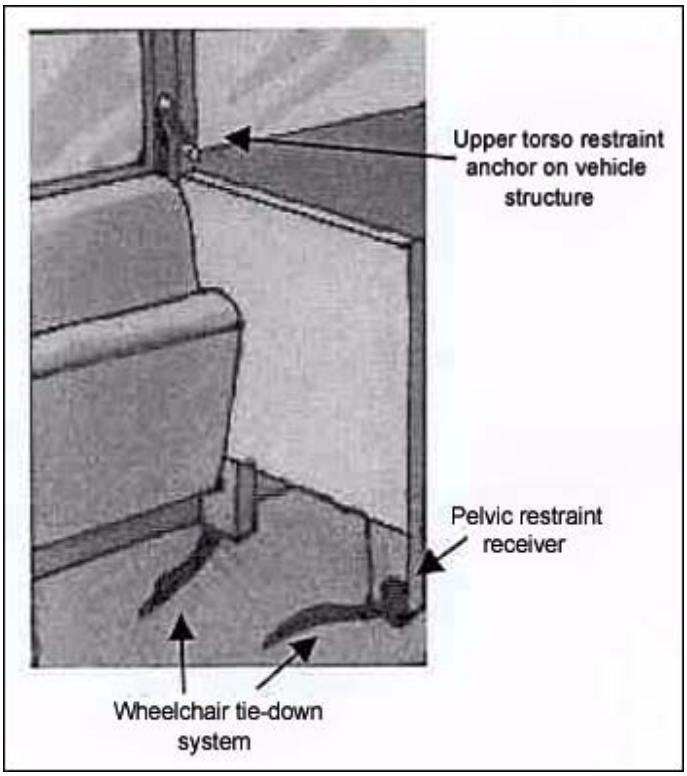

Figure 8.
Mass-transit vehicle with upper torso restraint anchor mounted to vehicle structure.

Privately Owned Vehicles

Of the 15 subjects, only 1 reported not using any restraints, since they were not available in the vehicle.

Out of 15 subjects, 3 subjects only used the pelvic restraint, and 9 subjects used both upper torso and pelvic restraints. Two subjects out of fifteen reported using solely an upper torso restraint. Out of 15 subjects, 3 subjects reported using their positioning belt as a form of occupant restraint during transport.

Other Vehicles

Out of two subjects, one reported not using any restraint, since they were not available in the vehicle.

Question 7

"Did you ever choose not to wear an occupant restraint?" was answered as follows.

Paratransit Provider

Nine out of sixteen subjects chose not to wear an occupant upper torso restraint because of one or more of the following reasons:

- Hurts the shoulder.
- Cuts across the neck.
- Covers the throat.
- Crosses too high over the torso.
- Is too tight.
- Is moved under the arm to improve comfort.
- Takes too much time to engage.
- Requires personal contact with the driver, which subjects dislike.
- Is very uncomfortable and fits differently from restraint in an automobile.

Mass-Transit Provider

All 11 subjects chose not to wear an upper torso and/or pelvic restraint because of one or more of the following reasons:

- Did not work.
- Could not be located on the vehicle.
- Difficult to use.
- Difficult to reach.
- Uncomfortable upper torso restraint.
- Too much time to engage.
- Driver was in a hurry.
- Driver did not help or take time to restrain.
- Trip was too short.
- Trip was too slow.
- No one else was wearing one.
- Wheelchair was stable enough.

Privately Owned Vehicles

Five out of fifteen subjects did not use the occupant restraint because it was uncomfortable and the restraint system was out of reach.

Other Vehicles

Both subjects using this type of vehicle did not use a WORS because none was provided in the vehicle.

Question 8

"Do you need help securing yourself?" was answered as follows for the four transit types:

- Thirteen subjects out of sixteen using mass transit and all eleven subjects using paratransit needed assistance in securing themselves with the WORS.
- Six out of fifteen subjects using a privately owned vehicle needed assistance in securing themselves with the vehicle-mounted occupant restraint.
- One out of two subjects needed help securing himself in a rental van.

Questions 9–12

Responses to these questions are listed in the **Table**. The data in the table show the number of subjects using the vehicle-mounted WORS and their opinions on the time needed to engage the occupant restraint, belt fit, comfort, and ease of use.

Question 9

"Does it take a long time to buckle up?" was answered as follows:

- Six subjects using mass transit reported that using a WORS is time-consuming, since it takes 5 to 7 minutes to secure the occupant restraint system.
- Ten subjects using privately owned vehicles for transport reported the WORS to be quick to use. The WORS was set up in a way that the wheelchair and occupant could drive in the restraint system and be immediately secured.

Question 10

"Does the restraint fit you well?" Nine subjects using privately-owned vehicles reported that the WORS provided good belt fit. Subjects who experienced poor belt fit gave the following reasons:

- Upper torso restraint was too tight/too loose.
- Upper torso restraint was too high/too low.
- Pelvic restraint crossed too high over the abdomen.
- Pelvic restraint crossed over the armrests.
- Pelvic restraint crossed over the WMD controller.

Question 11

"Does the restraint feel comfortable?" Ten subjects using privately owned vehicles reported the WORS was comfortable. Subjects who experienced discomfort related to upper torso and pelvic restraint use gave the following reasons:

- Restraints were hurting subject's neck and shoulder.
- Restraints were crossing over the user's face.
- Restraints were too tight.
- Restraints were installed in the wrong location.
- Restraints were dirty.

Question 12

"Is the restraint easy to use?"

- Thirteen paratransit users reported that the WORS was easy to use.
- Ten privately owned vehicle users reported that the WORS was easy to use.
- Subjects using paratransit did not find the occupant restraints difficult to use because the vehicle driver restrained these individuals when entering the transit vehicle.

Reasons that subjects using mass transits did experience WORS to be difficult in use are:

- Restraint system often does not work (properly).
- Restraints are difficult to find on the vehicle.
- Restraints are difficult to reach (too far up/down).
- Driver has to reach over the subject to engage the restraint.

DISCUSSION

This study investigated problems with the use of current vehicle-mounted WORSs when used by wheelchair-seated individuals. The noncomprehensive survey was intended to seek feedback on key issues. It was not developed or analyzed by an objective source, so bias may be introduced. Although the validity of this study is limited, because of the small sample of users, the results from the survey do give a perspective on the perceived use, satisfaction, comfort, and fit of currently installed occupant restraint systems for WMD users in the common types of wheelchair transportation vehicles. Literature shows that with a limited number of subjects (12) using a particular device or system, 85 percent of the user problems and product issues can be detected. However, a larger number of subjects are necessary to evaluate the usability of currently used WORSs (27).

No distinction was made between WMD type and motor vehicle type used; therefore, no conclusions could be drawn regarding design and development of occupant restraint systems for powered versus manual wheelchairs.

The majority of the subjects experienced discomfort when using the upper torso and pelvic restraint. Discomfort of restraints is caused by dirty, tight, and/or poorly positioned restraints that contact the neck, shoulder, and/or nose. Other deficiencies involved upper torso and pelvic restraints crossing over the wheelchair armrests and controller, thereby preventing proper body contact and fit. Finally, engaging the restraint around the user is often found to be time-consuming and intrusive.

Findings from this study are in contrast to the guidelines for wheelchair occupant restraints as recommended by WC-19 and SAE J2249 (6,19). A decrease in occupant restraint usage, which might occur because of current WORS deficiencies, could result in increased risk of injury when individuals use their wheelchairs as motor vehicle seats (1).

A previous study reported "discomfort" and "difficulty of use" of wheelchair occupant restraint systems when used in public vehicles (18). These findings are similar to those found in this study, adding to the importance of improving the user comfort and design of WORS, which are currently installed in public vehicles.

Finally, the use of positioning belts as safety restraints (mainly in mass transit) increases occupant risk of injury, since positioning belts are designed to provide wheelchair occupants with postural support and they do not comply with SAE J2249 safety requirements for occupant restraints used in motor vehicles (19).

One way to improve safety, usability, satisfaction, comfort, and fit of WORS is to integrate the upper torso

and pelvic restraint into the wheelchair seat. Considerable research has been done in the automotive industry on integrated restraint technology. Occupant protection was improved when integrated seat restraint systems were used in commercial vehicles (23–26). Advantages include personalized and appropriate belt fit, improved restraint from all directions (front, side, rear, and rollover), improved head restraint, minimization of contact injury and injury induced by the restraint system itself, tolerable freedom of movement while riding, and ease of adjustment.

A study performed by Ruter and Hontschik (26) showed that seat-integrated upper torso and pelvic restraints have an improved wearing comfort provided by better restraint geometry for people of various heights. Improved comfort was observed when the restraint system was engaged, since the restraints are always in the same position and easily located, even with varying seat positions. From Ruters study, we can conclude that when seat-integrated upper torso and pelvic restraints are used, frontal crash protection can be improved because of proper positioning of the upper torso restraint, especially for people with atypical sitting heights as a result of various sized occupants and/or wheelchairs.

Research is under way to evaluate the feasibility of a wheelchair integrated restraint system (22,28). However, since a wheelchair functions primarily as a mobility device, further research is needed to evaluate comfort and usability when individuals use this type of WORS on commonly available wheelchairs. Since this survey did not include types of wheelchairs used in the various transit vehicles, future research needs to be conducted to specify which types of wheelchairs would benefit most from improved wheelchair occupant restraint technology.

The Dutch Council of the Chronically Ill and the Disabled recently published a survey on wheelchair transportation safety, by using individuals from disability organizations and the council's website (29). Four hundred and sixteen wheelchair users responded to the survey. In 60 percent of the cases in which wheelchairs were secured, individuals were not restrained within their wheelchairs. A similar epidemiological study could be conducted in the United States to capture occupant restraint usage and injury incidence among individuals using wheelchairs as motor vehicle seats. Disability organizations, American Veterans organizations, and other disability organizations, as well as wheelchair-oriented websites, can be used to collect representative user feedback. A future survey should incorporate usability issues, accident rates, and accident severity among wheelchair users. The following additions to the existing survey are suggested:

- Type of wheelchair used (manual, power, scooter).
- Number of miles traveled per week/month.
- Type of wheelchair securement.
- Number of (any) motor vehicle accidents while seated in wheelchair.
- Injury occurrence while seated in wheelchair (severity).
- Seat height and wheelchair occupant weight.

The number of study subjects necessary to obtain data that represent the total wheelchair occupant population should be obtained through randomized sampling, and a larger sample will give a better representation of the wheelchair-using population.

CONCLUSION

Wheelchair users' survey comments indicated less than adequate comfort, satisfaction, belt fit, and ease of use when rating WORS currently installed in paratransit and mass transit. The survey showed that individuals using upper torso and pelvic restraints installed in their private vehicle experience the use of WORS to be quick, easy, and comfortable. Decreased usage, discomfort, difficulty in use, and poor belt fit occur with various types of wheeled mobility devices and various-sized individuals using a WORS that is mounted in a fixed location to the vehicle structure in paratransit and mass-transit vehicles. Results from this survey suggest the need for improving safety, comfort, and ease of use of currently available WORS for individuals using wheelchairs in transportation.

ACKNOWLEDGMENTS

This research was conducted with the support from the National Institute on Disability and Rehabilitation Research (NIDRR), Rehabilitation Engineering Research Center (RERC) on Wheeled Mobility, grant H133E30005. We would also like to thank the Committee for Accessible Transportation for their assistance. Opinions expressed in this study are our own and do not necessarily represent the opinions of NIDRR.

Journal of Rehabilitation Research and Development Vol. 39 No. 1 2002

APPENDIX

Welcome to the 5-minute survey. This survey is meant for people who use their wheelchair as a motor vehicle seat during transportation. This survey evaluates the usability and satisfaction of shoulder and lap belts when used by wheelchair-seated individuals during transportation in buses, vans, cars, etc.

Select only one answer box for each question. If you use multiple types of transportation, please fill-out a survey for each vehicle type.

Your help is very much appreciated and will help develop restraints that are safe, comfortable, and user friendly. For any questions regarding this survey, please contact the research coordinator.

Question 1:
Do you use your wheelchair as a motor vehicle seat when using transportation?

- ❑ yes
- ❑ no

Question 2:
What type of transportation do you use?

- ❑ paratransit
- ❑ mass transit
- ❑ privately owned vehicle
- ❑ other, please specify . . .

Question 3:
Do you use any form of occupational restraint (i.e., shoulder and/or lap belt) when traveling in a motor vehicle?

- ❑ yes
- ❑ no
- ❑ no, I use my wheelchair-mounted positioning belt

Question 4:
What type of occupant restraint do you commonly use?

- ❑ none
- ❑ lap belt only
- ❑ shoulder belt only
- ❑ lap and shoulder belt
- ❑ other, please specify . . .

Question 5:
Is the lap belt you use fixed to the motor vehicle?

- ❑ yes
- ❑ no, fixed to the wheelchair
- ❑ other, please specify . . .

Question 6:
Is the shoulder belt you use fixed to the motor vehicle?

- ❑ yes
- ❑ no, fixed to the wheelchair
- ❑ I don't know
- ❑ other, please specify . . .

Question 7:
Did you ever choose not to wear a shoulder or lap belt?

- ❑ yes, because . . .
- ❑ no, I always wear a lap belt
- ❑ no, I always wear both a lap and shoulder belt

Question 8:
If you have used shoulder and/or lap belts that are mounted to the motor vehicle, please answer the following questions: Do you need help restraining yourself with the lap/shoulder belt?

- ❑ yes, because . . .
- ❑ no
- ❑ sometimes, when . . .

Question 9:
Does it take a long time to buckle up?

- ❑ yes, it takes at least . . . minutes
- ❑ no, because . . .
- ❑ I don't know

Question 10:
Does the restraint fit you well?

- ❑ yes
- ❑ no, because . . .
- ❑ I don't know

Question 11:
Does the restraint feel comfortable?

- ❑ yes
- ❑ no, because . . .
- ❑ I don't know

Question 12:
Is the restraint easy to use?

- ❑ yes
- ❑ no, because . . .
- ❑ I don't know

These were all the questions. Thank you for your cooperation.

REFERENCES

1. NHTSA. Buckle Up America. Washington, DC: Department of Transportation; 1997.
2. LaPlante MP, Hendershot GE, Moss AJ. Assistive technology devices and home accessibility features: prevalence, payment, need and trends, advance data. Washington, DC: National Institute on Disability and Rehabilitation Research (NIDRR); 1992.
3. Shaw G. Wheelchair rider risk in motor vehicles: A technical note. J Rehabil Res Dev 2000;37(1):89–100.
4. NHTSA. Wheelchair users injuries and deaths associated with motor vehicle related incidents. Washington, DC: National Center for Statistics and Analysis; 1997 September.
5. Bertocci GE, Digges K, Hobson D. Development of transportable wheelchair design criteria using computer crash simulation. IEEE Trans Rehabil Eng 1996;4(3):171–81.
6. ANSI/RESNA. Wheelchairs used as seats in motor vehicles. Arlington, VA: RESNA; 2000.
7. Ziegler P. The relationship between shoulder belt fit and occupant protection. AAAM Proceedings; 1982 October.
8. Bertocci GE, Esteireiro J, Cooper RA, Young TM, Thomas C. Testing and evaluation of wheelchair caster assemblies subjected to dynamic crash loading. J Rehab Res Dev 1999;36(1):32–41.
9. Bertocci GE, Ha D, van Roosmalen L, Karg P, Deemer E. Evaluation of wheelchair drop seat crashworthiness. Med Eng Phys 2000;37(5).
10. Ha D, Bertocci GE, Deemer E, van Roosmalen L, Karg P. Evaluation of wheelchair back support crashworthiness: combination wheelchair back support surfaces and attachment hardware. J Rehabil Res Dev 2000;37(5).
11. Ha D, Bertocci GE, Deemer E, van Roosmalen L, Karg P. Evaluation of wheelchair seating system crashworthiness: Wheelchair back surfaces attachment hardware. RESNA Annual Conference; 2000; Orlando, FL: RESNA press; 2000.
12. Deemer EWD, Bertocci GE, Ha D. Wheelchair seating system crashworthiness: An evaluation of seating surface attachment hardware. RESNA Annual Conference; 2000; Orlando, FL, Washington, DC: RESNA Press; 2000.
13. van Roosmalen L, Ha D, Bertocci GE, Karg P, Szobota S. An evaluation of wheelchair seating system crashworthiness using federal motor vehicle safety standard 207 testing. RESNA Annual Conference; 1999 June 25–29; Long Beach, CA, Washington, DC: RESNA Press; 1999. p. 257–9.
14. Bertocci GE, Szobota S, Ha D, van Roosmalen L. Development of frontal impact crashworthy wheelchair seating design criteria using computer simulation. J Rehabil Res Dev 2000;37(5):565–72.
15. Bertocci GE, Digges K, Hobson DA. Shoulder belt anchor location influences on wheelchair occupant crash protection. J Rehabil Res Dev 1996;33(3):279–89.
16. Bertocci GE. The Influence of securement point and occupant restraint anchor location on wheelchair frontal crash safety (PhD dissertation). Pittsburgh, PA: University of Pittsburgh; 1997.
17. Sprigle S, Morris B, Nowacek G, Karg P. Assessment of adaptive transportation technology: a survey of users and equipment vendors. Assist Technol 1994;6:111–9.
18. Linden MA, Kamper DG, Reger SI, Adams TC. Transportation needs: Survey of individuals with disabilities. RESNA Annual Conference; 1996 June 7–12: Washington, DC: RESNA Press; 1996. p. 52–4.
19. SAE. SAE J2249 Wheelchair tiedowns and occupant restraints (WTORS) for use in motor vehicles: SAE; 1996.
20. van Roosmalen L, Bertocci GE, Karg P, Young T. Belt fit evaluation of fixed vehicle mounted shoulder restraint anchors across mixed occupant populations. RESNA Annual Conference; 1998 June; Minneapolis, MN, Washington, DC: RESNA Press; 1998. p. 40–3.
21. Bertocci GE, Evans J. Injury risk assessment of wheelchair occupant restraint systems in a frontal crash: a case for integrated restraints. J Rehabil Res Dev 2000;37(5):573–89.
22. van Roosmalen L, Bertocci GE. Adaptation of integrated restraint technology for use in wheelchair transportation. IEEE Eng Med Biol Mag; 1999; Atlanta, Georgia; 1999.
23. Haberl J, Ritzl F, Eichinger S. The effect of fully seat-integrated front seat belt systems on vehicle occupants in frontal crashes. ESV-Conference Goteborg; 1989; Goteborg: Bayerische Motoren Werke AG, Vehicle Safety, Munich, Germany; 1989. p. 17.
24. Cremer HP. Seat integrated safety belt. In: Society of Automotive Engineers (SAE); 1983. p. 63.
25. Lynch T. Integrated seat adds safety, design convenience. Design News 1995;October:43.
26. Ruter G, Hontschik H. Protection of occupants of commercial vehicles by integrated seat/belt systems. 23rd Stapp Car Crash Conference, San Diego, 1979 17–19 October. Warrendale, PA: Society of Automotive Engineers, Inc.; 1997.
27. Virzi R. Refining the test phase of usability evaluation: How many subjects is enough? Hum Factors 1992;34:457–68.
28. van Roosmalen L, Bertocci GE. Evaluation of the seat belt anchorage strength of a prototype wheelchair integrated occupant restraint system. RESNA Annual Conference; 2000 June 25–29, Orlando, FL, Washington, DC: RESNA Press; 2000. p. 342–4.
29. Dutch Council of the Chronically Ill and the Disabled; 2000. http://www.cg-raad.nl.

Submitted for publication August 7, 2000. Accepted in revised form April 24, 2001.