EVALUATION OF THE AIPR PNEUMATIC PROSTHESIS [a]

Luigi Lucaccini, M.A., Hilde Groth, Ph. D., and
John Lyman, Ph. D.

Biotechnology Laboratory
Department of Engineering
University of California
Los Angeles, California 90024

This study presents and integrates the results of an engineering and a performance assessment of the pneumatic prosthesis developed by the American Institute for Prosthetic Research (AIPR). The investigation was conducted at the Biotechnology Laboratory, UCLA, on a right, unilateral above-elbow amputee, and follows the general procedure outlined by Groth, Lyman, and Kaiser (1963) and employed by Lucaccini, Wisshaupt, Groth, and Lyman (1965). Data obtained during the evaluation consist of measurements of specific aspects of performance, informal observations, and comments of the amputee collected during testing.

ENGINEERING EVALUATION

System Description

Although the AIPR prosthesis (also referred to as the experimental arm) has been described previously (Kiessling, 1961 ab) in publications with limited distribution we feel it is essential to provide the complete description as given in the "Developer's Claims Regarding the AIPR Pneumatic Prosthesis":

> "The AIPR Upper Extremity Prosthesis, has been specifically developed to facilitate the maximal rehabilitation of the more serious amputation involvements in both unilateral and bilateral situations. The basic design philosophy has been to provide a series of externally powered functional components that were capable of delivering a significant degree of prosthetic function in those amputation levels where the conventional prosthetic devices either failed entirely or attained a degree of diminishing return due to the extent of input effort required, or the complexity of the hardware and harnessing. Essentially the Pneumatic Prosthesis (in any of its several forms) does provide a high level of

[a] This reported research was sponsored by the Department of Health, Education, and Welfare, Vocational Rehabilitation Administration, Grant VRA RD-1201M-64. The opinions expressed in this article are solely those of the authors.

reliability, improved functional capability, ease of operation, and natural motions. The AIPR Pneumatic Prosthesis is definitely not intended as a machine adjunct capable of heavy manual labor; the externally powered components have had their maximal output intentionally limited to the performance of light duty tasks such as general office work, skilled or semi-skilled manufacturing operations or similar work in merchandising or retail sales.

"The Pneumatic Upper Extremity Prosthesis is a closed loop system of dual acting (bi-directional) linear and rotational Pneumatic Servo Mechanisms integrated through multiple function control valves to simulate the more important motions of the human arm, or portions thereof. This is an externally powered Prosthetic System which derives its motive power from Liquid Carbon Dioxide as carried in a regulated manifold on the person of the amputee. Each of the powered functional components provides voluntary motion in both attitudes; the system does not feature springs, rubber bands, or gravity return mechanisms. The AIPR Pneumatic Prosthetic System includes nine servo actuated prosthetic components and six servo control valves. The six servo control valves have been designed with the capability of operating from one to three bi-directional (dual acting) Pneumatic Servo Motors. These valves are manually actuated by the amputee through the harnessing of residual body motors and are classified as pull type, pressure type, or shift type. There are six bi-directional pneumatic servo mechanisms, including four terminal devices, an elbow flexor, and a wrist pronator which provide externally powered motion responses under the complete voluntary control of the amputee. The AIPR bi-directional pneumatic servo motors produce motive power when gas under pressure is introduced on either side of its piston; the piston's motion results in the displacement (or exhausting) of an equal volume of gas from the opposite side of the cylinder. In the AIPR Pneumatic system this intake and exhaust of gas is simultaneously controlled by a single actuator rod motion which maintains a static pressure lock on the servo motor whenever the flow of gas is arrested. There are three Passive Components which require manual prepositioning by the amputee but provide for pneumatic locking without imposing the need for separate controls thereon."

The particular test model of this system provided for evaluation consisted of the following parts:

1. Light duty pneumatic hook (Part No. C–10100)
2. Pronator mounting bracket (C–10116)
3. Wrist pronator and cosmetic cover (C–70200)
4. Elbow flexor (C–60500)
5. Two-function pull valve (SV–51000)
6. Single-function pull valve (SV–53500–C)

In addition, four regulated CO_2 manifolds and two refilling devices were supplied with the arm. An upper arm socket and the harnessing system were fabricated at UCLA. The operation of the active components of the prosthesis (referred to as elbow unit, wrist unit, and terminal device) will be described briefly. The complete prosthesis is shown in Figures 1 and 2.

Upper Arm Socket

The above-elbow socket contains no active parts, but it provides a means for supporting other components of the system and for linking them to the amputee. The socket is fabricated from conventional laminated plastic material. Harness straps are attached to it for hold-

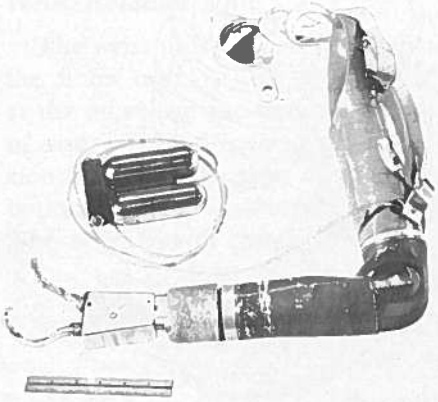

FIGURE 1.—Left-side view of AIPR prosthesis.

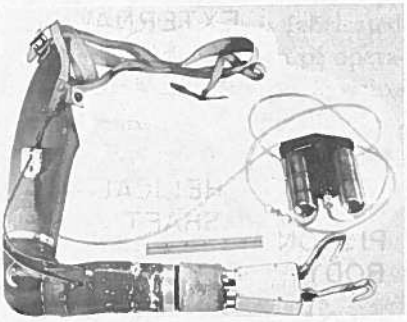

FIGURE 2.—Right-side view of AIPR prosthesis.

ing and control. The pneumatic elbow flexor unit is attached by a threaded coupling ring mounted at the lower end of the socket, enabling the amputee to adjust the degree of forearm cant.

Elbow Flexor Unit

The pneumatic elbow flexor unit is constructed of cast metal and covered by a silastic cosmetic covering. It is connected to the above-elbow socket by a threaded coupling as described before. The forearm socket is connected to this unit by a set of hinges, secured to the unit by easily removable flathead screws. The pneumatic elbow unit is a dual-acting helical actuator which has three major components: 1. an

oval-shaped body serving as a piston chamber, 2. a helical shaft, and 3. an oval-shaped piston. The shaft is secured to an endcap at each end of the chamber. The endcaps are mounted on ball bearings and permit rotation of the shaft. The major components of the elbow unit appear in Figure 3.

Forearm flexion and extension occur through the rotation of the

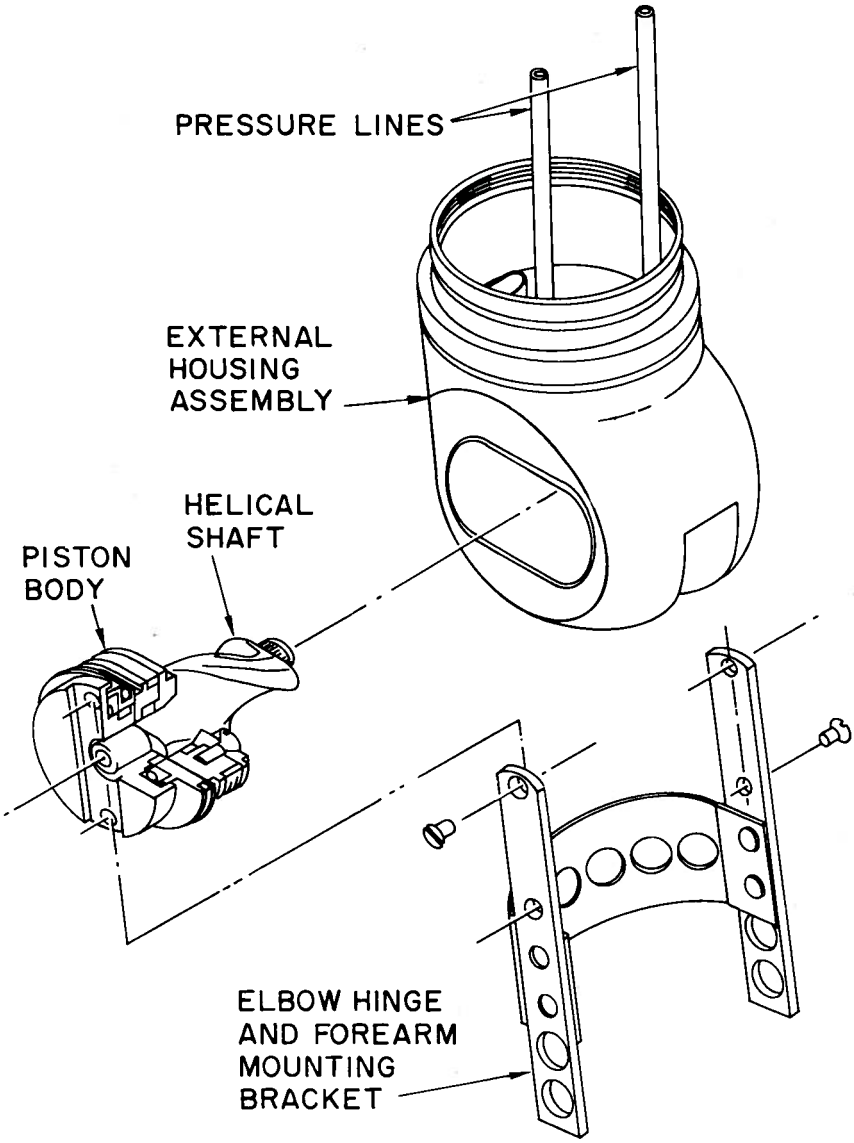

FIGURE 3.—Elbow unit.

helical shaft, since, as mentioned, the forearm is connected to the covers of the shaft by hinges. Rotation of the helical shaft is controlled by the displacement of the piston within the chamber. The piston has a helical hole in its center through which the shaft passes. As the piston travels across the chamber it forces the rotation of the shaft. Piston displacement occurs when venting one side of the chamber while opening the other side to the CO_2 pressure line.

Forearm Shell

The unit is fabricated from conventional plastic material and is attached at one end to the elbow unit by hinges. A threaded adapter is mounted at the other end and the wrist unit is connected to it. In addition to providing support for the wrist unit and terminal device, this unit contains the control valve modules, CO_2 fittings, and tubing.

Wrist Rotation Unit

The wrist unit consists of a helical actuator system similar to that of the elbow unit. At one end it is screwed onto the forearm socket and at the other end the terminal device is attached. The unit is fabricated of cast metal and covered with a layer of silastic. The method of operation is similar to that of the elbow unit. Venting and pressurizing opposite sides of a chamber cause a piston to move down the chamber. The operation of this unit differs in that travel of the piston causes

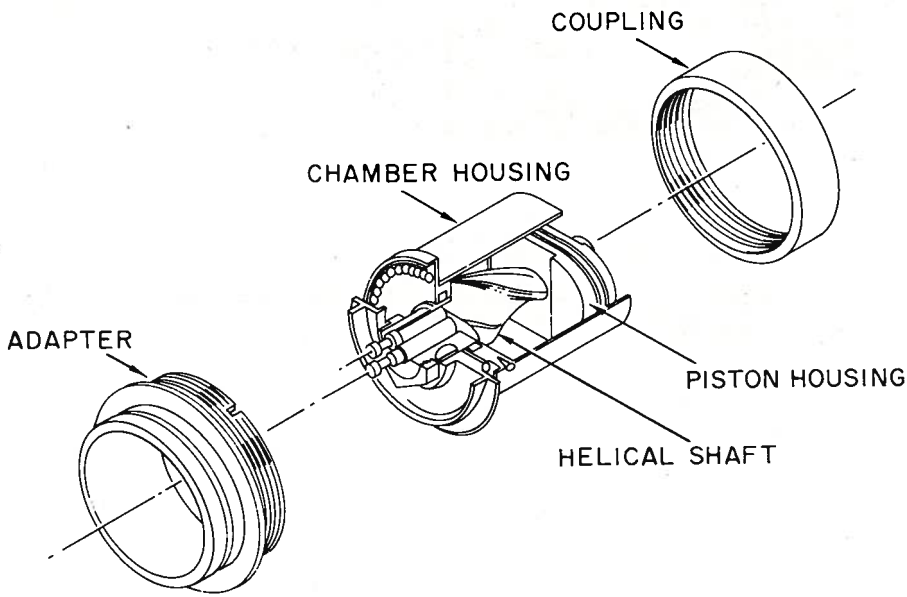

FIGURE 4.—Wrist unit.

rotation of the chamber and attached terminal device, while the shaft is immobile. The wrist unit is illustrated in Figure 4.

Terminal Device

The terminal device is fastened directly to the distal end of the wrist unit. It has a cover plate secured by setscrews, and a cylinder and piston are contained within it. The piston is displaced by venting one side of the chamber and pressurizing the other, and the piston rod connects to a lever which moves with the piston. This movement activates a Sierra hook finger screwed onto this lever. A rigid matching finger is mounted directly onto the terminal device body and the mobile finger closes against it. The terminal device is shown in Figure 5.

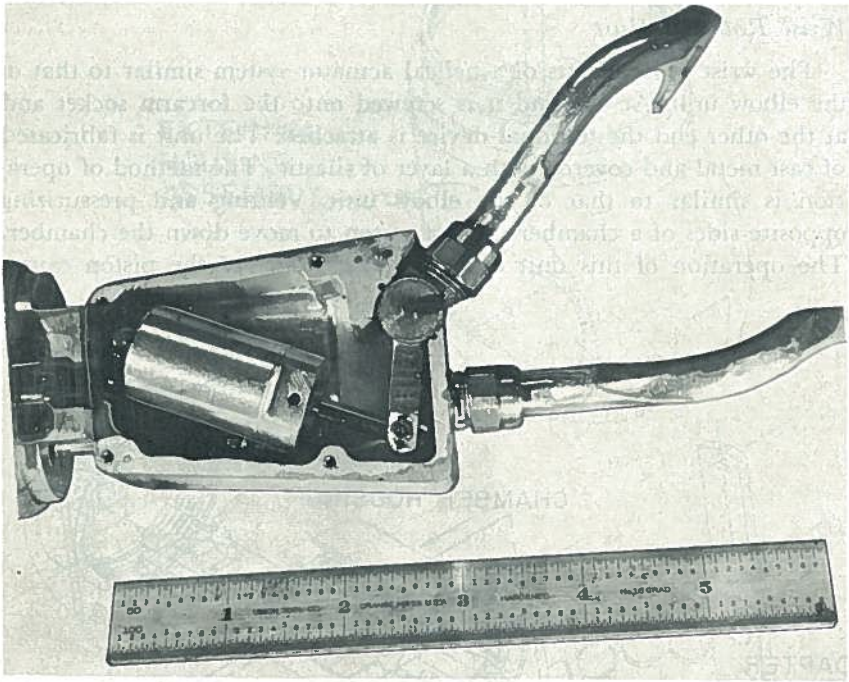

FIGURE 5.—Terminal device.

Control Valves

Two valves are used in this prosthesis. Their design and action are basically similar. The single-function valve controls terminal device opening and closing. The two-function valve controls forearm flexion and extension and wrist pronation and supination. These valves are activated by amputee body control motions. The muscle-to-valve link-

age is accomplished by standard harnessing and connection of Bowden cables from the harness to the valve units.

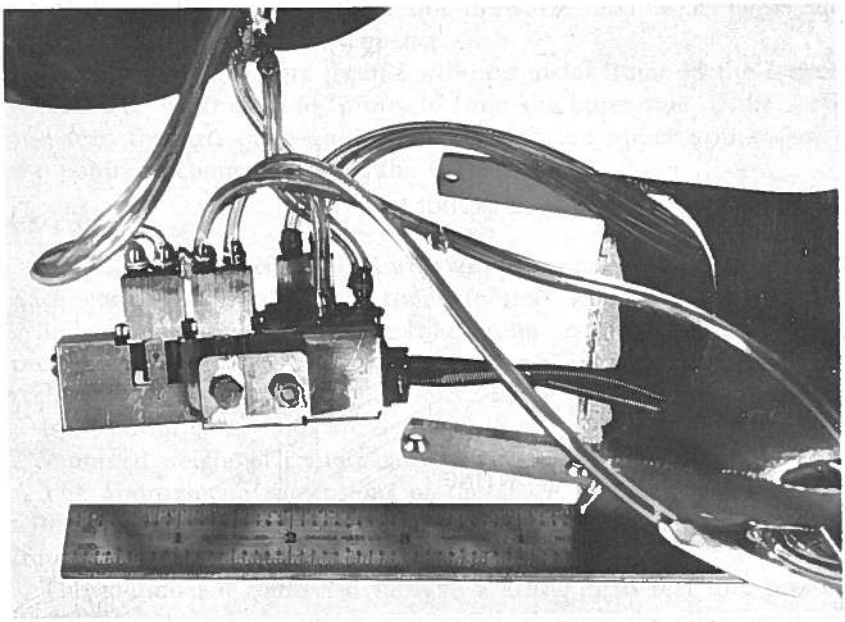

FIGURE 6.—Control valves.

Each valve has four basic parts: 1. one or two valve modules, 2. a valve module mounting block, 3. an actuator slide assembly, and 4. an air feed sub-assembly. Figures 6 and 7 show these components and their operation for the two-function valve.

The mounting block receives a constant high pressure CO_2 supply and distributes it to the valve module and to the actuator slide assembly. It also provides support for the other three valve components.

Each valve module controls the action of one prosthetic motor unit. The module is connected via polyethylene tubing to both sides of the piston chamber of the motor unit. When in the normal resting condition, the module acts to lock the position of the unit by trapping CO_2 in the chamber around both sides of the piston. Each valve module contains two valve module actuators. These are tipped to the side (see Figure 7), one at a time, by the passage of the sliding unit of the valve. The tipping of one valve module actuator distorts two small O-rings inside the module, resulting in the venting of one side of the chamber of the motor unit to the atmosphere and in the opening of the other side of the chamber to the high pressure CO_2 supply. For the second valve module actuator, the sequence of venting and pres-

surizing is reversed. Motion in either direction is accomplished by tipping one of the actuators of the module.

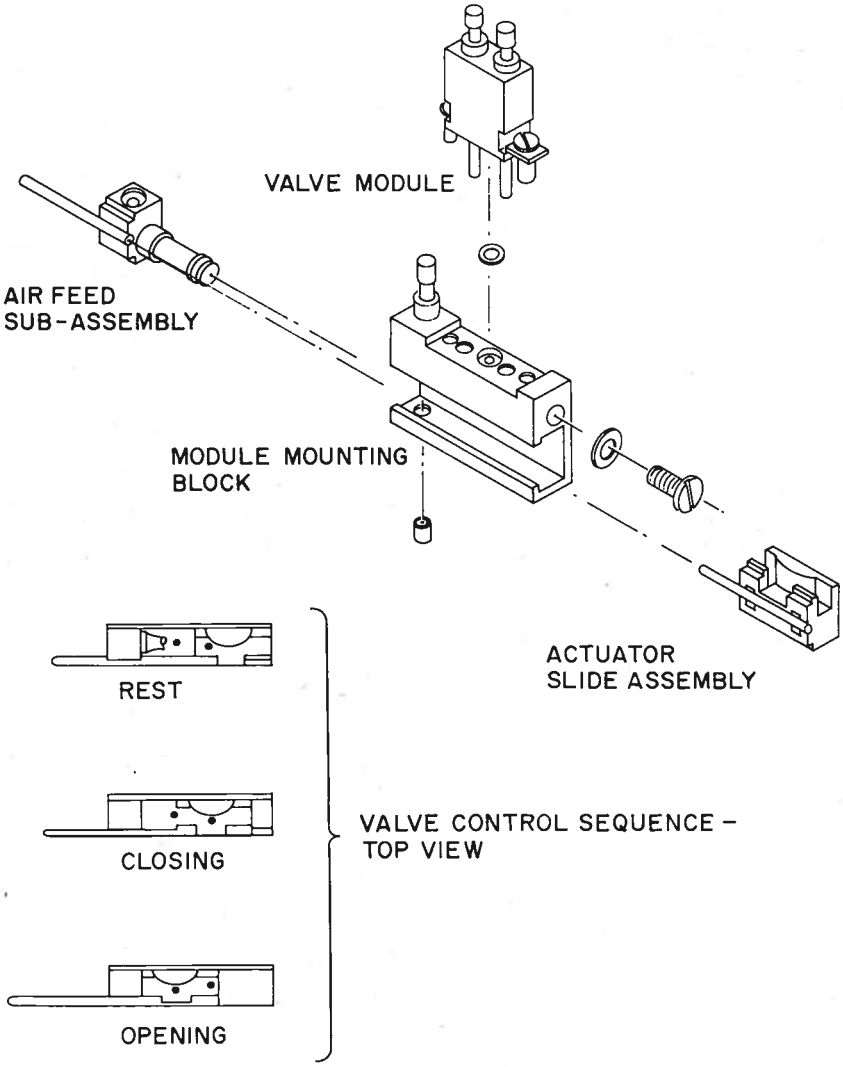

FIGURE 7.—Two-function control valve.

Actuator slide assembly and air feed sub-assembly work together as a movable chamber and fixed piston, respectively. The sub-assembly is fixed beneath the valve module(s) and receives CO_2 from the mounting block, displacing the slide assembly to the opposite end of the mount-

ing block. A control cable is attached to the slide assembly and when pulled slides the actuator slide assembly back over the sub-assembly, counter to the pressure of the CO_2. Attached to the slide assembly is a protruding roller bracket which tips the valve module actuators sideways as they are passed in sequence.

Both control valves are located within a metal frame in the forearm socket. The control cables protrude from the outer side of the socket and lead through cable guides mounted on the upper arm socket to the points of connection with the harness.

CO_2 Supply

The CO_2 containers supplied with this arm were developed by AIPR. Each container is fabricated from stainless steel, consisting of two cylinders connected through an aluminum manifold containing the pressure regulator. A specially designed refilling device permits easy recharging from a standard CO_2 tank. These portable CO_2 containers weigh 1.26 lb. empty and are designed to acept 0.30 lb. of CO_2 giving a combined weight of container and charge of 1.56 lb.

The approximate dimensions of the space into which a container will comfortably fit are 6 $\times$ 4.5 $\times$ 1.5 in., about the size of a rear trouser pocket.

The container is connected through a fitting at its rear to a pressure line that leads into the upper arm socket, through the elbow unit and into the forearm. Here it is divided by a Y-fitting and feeds the valve module mounting blocks of each valve unit. Tubing then leads from the valve module actuators to the prosthetic motor units.

Operating Characteristics

Range of Motion

The ranges of motion for the experimental prosthesis were specified by the developer to be the following:

1. elbow rotation: 130 deg.; from 8 to 138 deg.
2. wrist rotation: 170 deg.
3. terminal device: 2.68 in. at widest opening between hook fingers

Measurements made with a goniometer or an engineering caliper revealed that the ranges of the test model provided for evaluation were in reasonable agreement with the specifications except in the case of the wrist. The measured values of the test model were the following:

1. elbow rotation: 126.5 deg.; from 8 to 134.5 deg.
2. wrist rotation: 155 deg.
3. terminal device: 2.68 in. or 44.5 deg.

Locking is possible anywhere along the range of each unit.

Speed of Motion

The speed of motion of each active unit of the prosthesis was measured for both directions of movement and at four points of a CO_2 cylinder charge: 100, 50, 25, and 12.5 percent of total volume. Velocities were measured by attaching a precision potentiometer to the joint of each unit. One channel of an oscillograph was used to record the changes in voltage across the potentiometer as movement occurred. The recording speed used was 100 mm./sec. and readings were made to the nearest mm. Although each trial involved a complete half-cycle of movement (from one extreme of the range of motion to the other) speeds were determined over the middle 90 percent of the total range of each unit to avoid including nonlinear effects at the extremes of the range. Velocity was computed simply as the ratio of distance traveled to time elapsed. Since for six of the eight prosthesis movements there is no fixed, exact control position but rather a control range (see Tables 3 and 4) over which speed of movement varies, some variability was found in the speed of operation of these movements. After some initial experimenting to determine the exact control location which yielded maximum velocity for each movement about 25 trials were recorded. The average of the five fastest trials was taken as an approximation to the average speed possible under practiced conditions of amputee operation. The effects of loading were also examined for wrist and elbow.

It was found that the amount of charge remaining in the CO_2 cylinder had no effect on velocity, thus providing an independent verification of the quality of the regulator (see Section on CO_2 Regulator). Elbow flexion speeds decreased from a high of 49 deg./sec. unloaded to 16 deg./sec. with a 3 lb. load. Extension speeds increased from 38 deg./sec. unloaded to 71 deg./sec. with a 3 lb. load. These results for all conditions of loading are presented in Table 1.

TABLE 1.—*Average Velocity of Elbow Unit*

Load	Flexion (deg./sec.)	Extension (deg./sec.)	Load	Flexion (deg./sec.)	Extension (deg./sec.)
No load	48.6	38.3	2.25 lb.	24.1	63.9
0.75 lb.	32.8	60.1	3.00 lb.	15.8	70.6
1.50 lb.	27.6	63.2			

Wrist speeds were nearly equal for both directions of movement, about 60 deg./sec. The addition of a 2 lb. cylindrical load to the terminal device, with the center of gravity of the load along the axis of wrist rotation, had no appreciable influence on wrist speed. Terminal device velocities were much higher than for the other units, being 95 deg./sec. for opening and 110 deg./sec for closing. The application of a loading condition to terminal device operation was not apparent and was not employed therefore. The exact speeds found for these units are presented in Table 2.

TABLE 2.—*Average Velocities of Wrist and Terminal Device Units*

Unit	Velocity (deg./sec.)
Wrist, unloaded:	
Pronation	57.2
Supination	60.7
Wrist, 2 lb. load:	
Pronation	58.9
Supination	60.1
Terminal device:	
Opening	95.2
Closing	110.6

Travel was found to be smooth and velocity was nearly linear over the measured range of motion for each unit.

Forces Available

The forces available from the units of this prosthesis were specified by the developer to be the following:

1. elbow: 60 in.-lb. of effective torque (or a 4 lb. weight at the terminal device)
2. wrist: 45 in.-lb. of torque
3. terminal device: 8 in.-lb. force

The weight just sufficient to stall the elbow at 90 deg. flexion was determined by attaching a load to the terminal device at a point 15

in. from the center of the elbow unit. The maximum load which could be just raised to 90 deg. was found to be about 3.2 lb. This is 20 percent below the minimum stalling weight specified by the designer. The designer's specifications were based on a total forearm, wrist, and terminal device weight of 1.38 lb. These components were found to weigh 1.70 lb. in the test model and may have contributed partly to the reduction in the weight which could be lifted. However, the original specifications were found to be inconsistent with regard to elbow torque measurements.

The torque developed by the wrist unit was measured with a Snap-On torque meter at five locations across the range of motion. The arm was mounted on a test stand with elbow flexed to 90 deg. Torques were measured in both directions at these locations and found to agree fairly well at all locations with the developer's specifications. From 40 to 45 in.-lb. of torque were required to stall the wrist at these locations.

The prehension force of the terminal device was measured with a force indicator set between the fingers of the hook. Prehension force equalled or exceeded the specifications of the developer at each of five test positions across the range of motion. At the minimum terminal device opening measureable with this device, 0.5 in., the force was found to be 8.0 lb. It increased nearly linearly to 12.5 lb. at the largest opening measured, 2.5 in.

CO_2 Regulator

Four CO_2 cylinders were supplied with the experimental arm for use in evaluation. The pressures available from these at full charge weight were 94, 94, 95, and 98 p.s.i., respectively. For two of these cylinders the available pressure was measured at a number of points over the life of the charge. The results of these measurements are shown in Figure 8. For cylinder #1 (98 p.s.i. at 100 percent charge) it was found that pressure had dropped only 3 percent from maximum after 90 percent of the charge was expended. For cylinder #2 (94 p.s.i.) measurements were carried out until 96 percent of the charge was expended and the resulting drop was found to be only 1 percent. It can be seen that these regulators are indeed of high quality and function adequately over the majority of the life of a charge to maintain a constant available CO_2 pressure to the prosthesis.

CO_2 Usage

The life of a CO_2 charge was determined by counting the number of complete cycles of a prosthetic unit that could be made before an initially full charge was depleted. Each cycle consisted of a complete movement in both directions over the range of motion of the unit. It was found that 911 terminal device cycles or 166 wrist cycles or 144

elbow cycles were possible from one charge. These figures represent the average of three trials for each unit using a cylinder filled exactly to the specified weight.

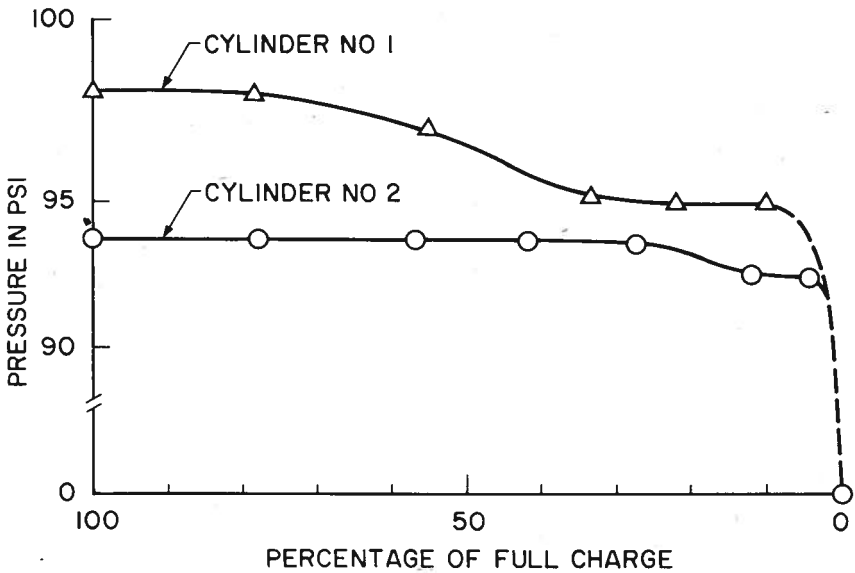

FIGURE 8.—Gas pressure as a function of charge life.

The proportionate rates of gas expenditure per complete cycle between terminal device, wrist, and elbow are 1.0:5.5:6.3. It is clear that the use of the wrist or elbow is much more expensive to the amputee in terms of gas use than is the terminal device. The life of a charge will vary then not only with the rate of activity of the amputee but also with the unit being activated. To the extent that extensive wrist and elbow activity can be avoided the amputee will be able to have correspondingly more terminal device movements before depleting the charge.

Control Valve Forces and Displacements

The force required by the amputee to operate the control valve does not increase linearly with displacement of the control cable by the amputee. Rather, a certain amount of force is required to overcome the initial resistance of the opposing pressure within the valve unit. Once this is overcome little additional effort is required to advance the valve from position to position. The force to activate these valves varied from about 4 to 4.3 lb. over the range of operation.

The control cable displacements required to reach the positions of

each valve are summarized in Tables 3 and 4. These figures are presented in terms of control ranges rather than a fixed control point since there is a displacement range over which each function can be actuated, although speed of operation varies somewhat over the range.

TABLE 3.—*Control Displacements for Single-Function Valve*

Step	Function	Distance of center of control position from zero (in.)	Total active range of control position (in.)	Distance from center of control position to center of previous position (in.)	Distance from beginning of control position to end of previous position (in.)
1	Closing	0.14	0.08	—	[a] 0.10
2	Opening	0.04	0.05	0.23	0.17

[a] Distance to zero control position.

TABLE 4.—*Control Displacements for Two-Function Valve*

Step	Function	Distance of center of control position from zero (in.)	Total active range of control position (in.)	Distance from center of control position to center of previous position (in.)	Distance from beginning of control position to end of previous position (in.)
1	Flexion	0.14	0.16	—	[a] 0.06
2	Extension	0.39	0.17	0.25	0.25
3	Pronation	0.75	0.10	0.36	0.36
4	Supination	0.99	0.07	0.24	0.16

[a] Distance to zero control position.

The total displacement for the two-function valve is 1.02 in. and 0.40 in. for the single-function valve.

PERFORMANCE EVALUATION

Amputee Pilot Wearer

After discussions and correspondence with the designer of the experimental prosthesis it was agreed to conduct the intensive perform-

ance evaluation on a unilateral right above-elbow amputee. This amputee is of good health, is a regular wearer of conventional prostheses and is proficient in their use. His description is presented in Table 5. Figure 9a illustrates the degree of amputation of the subject.

TABLE 5.—*Description of Subject*

Sex	Male
Age	48
Height	5′ 9½″
Weight	180 lb.
Occupation	Architectural field supervisor
Health	Good. Heart attack 4 years ago necessitates avoidance of overexertion
Intelligence	Above average
Attitude	Good
Amputation	Unilateral, right AE
Stump length	Acromion to end of stump: 5½″
Humerus length, sound arm	Acromion to elbow center: 12″
Cause of amputation	Industrial accident
Age at amputation	21

TABLE 5—Continued

Present prosthesis	Hosmer internal elbow, VO hook, Figure-8 harness
Use of present prosthesis	Regular daily use, on and off job
Experience	Has worn prostheses since 1942; involved in testing programs periodically since 1950

Although this amputee initially agreed to devote considerable time to the study, he found it more and more difficult to keep scheduled testing appointments as the study progressed. It was decided, therefore, to obtain performance data only with the experimental arm, rather than to test both experimental and conventional arms concurrently. Data with the conventional arm were available for the evaluation tests from an evaluation previously conducted at UCLA (Lucaccini et al., 1965) in which this amputee served also as a subject. These data were judged to be sufficient for comparison purposes although statistical comparisons were not made *between* the two prostheses.

Prosthetic Systems

Conventional Prosthesis

This prosthesis is worn by the amputee in his daily routine and he has worn the same configuration for the past several years. He is quite adept with it. The prosthesis consists of the following units:

Hosmer internal elbow turntable
Sierra Model B wrist flexion unit
Northrop-Sierra two-load, heavy duty, VO hook
Standard AE double-wall plastic laminate socket
Figure-8 harness with dual control system for elbow flexion and elbow locking

The prosthesis is serviced regularly at a local limb shop and is in good functional condition. Figure 9b presents the amputee with this prosthesis.

Experimental Prosthesis

The experimental arm described in the Section on Engineering Evaluation was mounted in a single-wall above-elbow socket. Prosthesis support was provided by a modified Figure-8 harness with elastic

cross-back strap. A Bowden cable leading from the four-position control valve unit was attached to the rear harness support strap. The amputee used humeral flexion to control this valve. A second Bowden

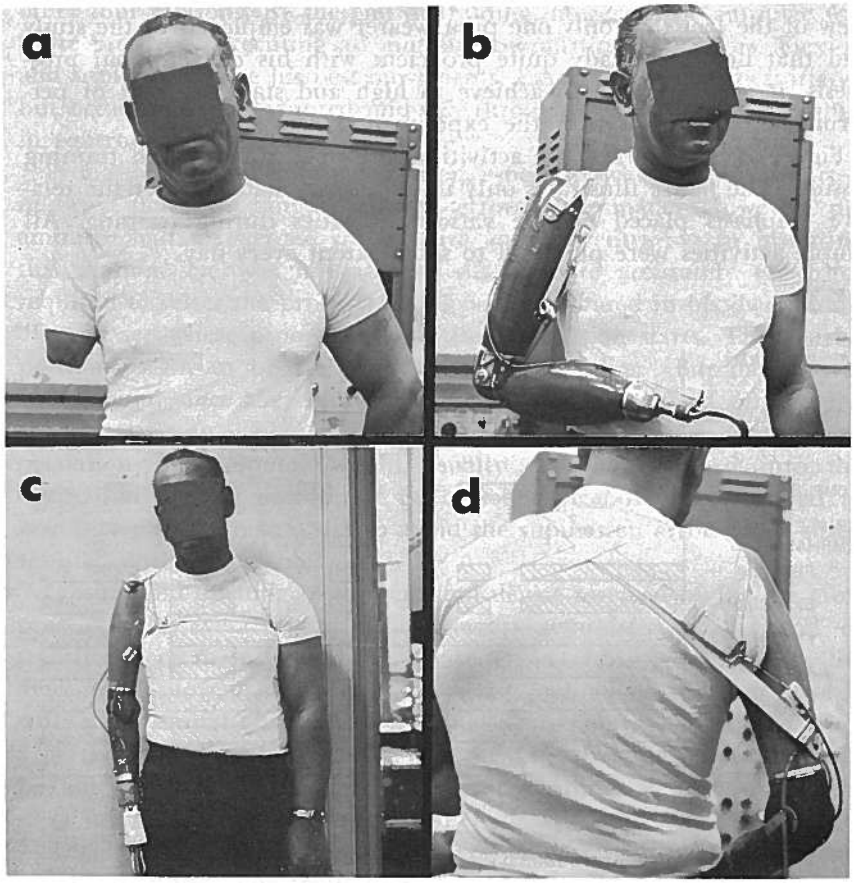

FIGURE 9.—(a) Amputee pilot wearer, (b) amputee with conventional prosthesis, (c) front view of amputee with experimental prosthesis, (d) rear view of amputee with experimental prosthesis.

cable led from the two-position to a chest strap, and the amputee activated the second control valve by chest expansion. The prosthesis is shown in Figures 9c and 9d.

Fittings, socket construction and adjustments to the harnessing of the experimental prosthesis were all performed by Carl Sumida of the Child Amputee Prosthetics Project, UCLA.

Training

Training in the use of the experimental arm was conducted over a five-week period. Twenty training sessions were conducted during this time, varying in length from 20 minutes to 2½ hours. The average session lasted nearly 2 hours. This fairly lengthy training period was employed to give the experimental arm as fair a test as possible. In view of the fact that only one pilot wearer was employed in the study and that he was already quite proficient with his conventional prosthesis, it was desirable to achieve as high and stable a level of performance as possible with the experimental arm.

Figure 10 summarizes the activities performed during each training session. The figure illustrates only in an approximate manner the relative emphasis placed on the various activities during training. All simple activities were practiced to some extent every day.

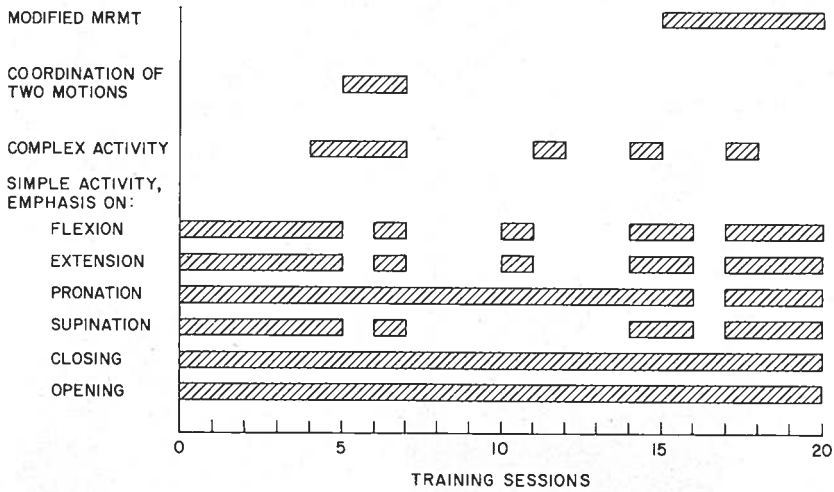

FIGURE 10.—Summary of activities during training.

Simple Activities

Drills in the initiation of each movement of the prosthesis were conducted daily throughout the training period. These were sometimes conducted alone by the amputee at his own pace, but usually were paced by a member of the laboratory staff using verbal commands or flash cards. The purpose of these drills was to provide intensive practice in the selection of all prosthetic movements rapidly, without error and in sequence. The difficulty of these drills increased as training progressed, with series of movements, alternation between movements

of various components and starting location of the components being varied.

Flexion and extension movements were quite good by the sixth training session. Supination required two additional sessions to become acceptable. Pronation reached an acceptable level by the 13th session, while terminal device movements never quite reached the level of the other four motions. By the end of training, however, the amputee was quite proficient executing all motions, committing few errors. Flexion and supination were his best movements. Extension was easily initiated but occasionally interrupted mid-way through the motion due to shift in control cable tension.

Pronation was not a smooth motion, especially when the wrist started midway along its range, but few errors were made. However, the amputee had to exercise special care and concentration in initiating this motion. He was not able to discriminate accurately the force required to select the proper control position. Stated in his own words, "I can't see where pronation stops and supination starts. The control positions seem to be right on top of each other." Supination was easily found since the control movement merely involved pulling the cable to its stop, which was the proper control position. In selecting pronation the amputee would usually continue forward into the supination control position if he overshot pronation. He tended to ease into pronation in order to avoid the supination error which often resulted on an overshoot.

Closing and opening of the terminal device received by far the most practice. However, the occasional errors committed at the end of training were mainly terminal device errors. Ability to regulate the amount of movement was fair for wrist and elbow, but quite poor with the terminal device. If a terminal device movement started from a partly opened position it was very unlikely that the amputee would be able to stop the motion before the terminal device reached its mechanical limit and stopped itself.

Regulation of speed of movement was achieved with all components at various times. The regulation was achieved by "cracking" the control valve position for the desired motion. In no case was the amputee able to select repeatedly a specific submaximal speed on any function, and often he was not able to "crack" the valve at all. In this regard he was most proficient with the elbow, then the wrist and only occasionally with the terminal device. Terminal device movement was voluntarily regulated at speeds too slow to be useful.

Complex Activities

Complex actions were emphasized during six training sessions. These included positioning the arm for grasp, grasping, manipulating objects,

transport, release. Simple geometric block forms were used as well as familiar household items. The opportunity to vary wrist angle was particularly beneficial in working out a suitable grasp orientation for difficult tasks. Some problems occurred in grasping objects securely and also in releasing them at the intended location. But, in general, the amputee was quite flexible in his approach to an activity and usually developed a satisfactory method of performance in a short time.

In order to obtain a quasi-objective index of the amputee's ability with the prosthesis, and also to provide a somewhat more challenging practice task, a number of trials were performed on a modified version of the Minnesota Rate of Manipulation Test, placing 20 instead of the usual 60 test objects. Figure 11 presents performance on this test for 22 trials conducted during the last six training sessions. This test involves terminal device activity almost exclusively and thus represents proficiency with this unit only. Since the amputee showed relatively poor control over the terminal device it was felt that this test would provide the best indication of his attainable level of proficiency. Inspection of the figure shows that although performance was quite variable, the overall level was approaching that obtained earlier with the conventional arm by the end of training.

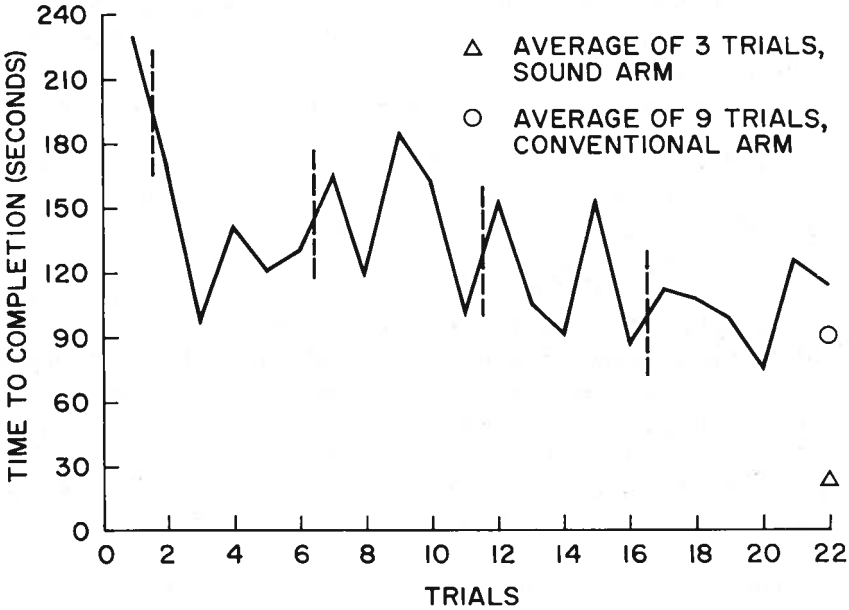

FIGURE 11.—Performance on modified MRMT. Dashed lines indicate divisions between training sessions.

Some time was spent in the early part of the training period practicing the activation of two motions simultaneously. Eight possible combinations can be developed, using either closing or opening of the terminal device together with one of the four functions of the elbow-wrist control unit. The amputee experimented with most of these combinations. He performed best when combining elbow and terminal device functions, but did not receive enough practice for smooth and repeatable performance with any one combination. Although his time did not permit continuation of training our preliminary results indicated that simultaneous coordinated motions can be achieved and deserve further examination.

Power Usage During Training

Records of active practice time, amount of gas expended, and length of rest periods were kept for each training session. The daily rate of gas expenditure has been computed by dividing the total gas expended in a session by the total active practice time (rest periods excluded). Figure 12 presents the average gas usage as a function of training session. The rate of expenditure of CO_2 varied from a high of 3.45 gm. CO_2/min. to a low of 1.12 gm./min., with an average of 1.98 gm./min. With the particular cylinder used in our evaluation about 135 gm. of CO_2 were available from a full charge. Thus, the useful life of a charge in terms of "active" use varied from 40 minutes to 120 minutes with an average of about 70 minutes. These figures do not reflect continuous movement of the prosthesis, but discrete activities carried out in rapid sequence by the amputee. Of the 37 hours spent in training, about 11 hours were spent in formal rest periods. Thus, the average rate of gas expenditure, including rest periods, was about 1.40 gm./min., giving an average useful charge life of 95 minutes.

The amputee's rate of activity should probably be considered to be close to an upper limit since much of the training was conducted at a pace that was barely comfortable for the amputee. Thus, these figures are much higher than would be expected for most amputees under normal working conditions since the rate of usage will depend on the amputee and the tasks he performs. To the extent that the terminal device is emphasized, gas usage should drop since this unit requires only a fraction of the gas needed for wrist and elbow motions. The large drop in gas usage over the last few days of training (see Fig. 12) reflects the fact that terminal device activity was used much more during this period (MRMT). Part of the decline can also be attributed to the specific task which involved much more "passive" use of the prosthesis in transport, positioning, etc.

In general, a charge such as the one employed in this evaluation

would be expected to last at least 4 hours and quite possibly considerably longer.

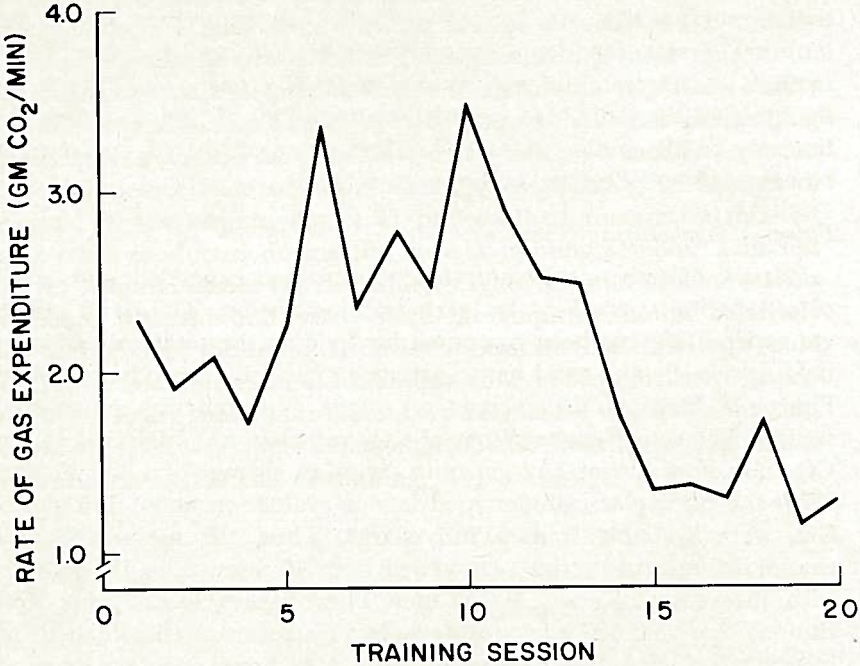

FIGURE 12.—Ratio of gas expended to active practice time as a function of training session.

Performance Tests

Range of Motion

Objective: To measure the range over which the amputee can effectively operate his prosthesis.

Procedure: The ability to operate the wrist and terminal device was tested with the prosthesis located at each of six locations: the mouth, breast pocket, perineum, anus, 90 deg. flexion of the elbow, and with the entire arm held horizontal at the shoulder level.

Apparatus: Terminal device opening was measured with a caliper. Readings were taken to the nearest 0.025 in. Movements of the wrist were checked against the known limits of the range of wrist motion with a goniometer attached to the forearm and aligned with the axis of wrist rotation.

Results: The maximum range of motion for each component is

presented in Table 6 for conventional and experimental arms. Table 7 summarizes the movement achieved at the six test positions as percentages of these maximums.

TABLE 6.—*Maximum Range of Motion for Prosthetic Components*

Component	Conventional arm	Experimental arm
Elbow limits	10°–135°	8°–135°
Elbow range	125°	127°
Wrist range	—	155°
T.D. range	3.25″	2.68″

TABLE 7.—*Percentage Maximum Function Possible at Six Elbow Locations*

Location	Conventional arm-AE amputee		Experimental arm-AE amputee		Minimum hook opening recommended by manual of UEP [a], %
	Hook, %	Wrist, %	Hook, %	Wrist, %	
Mouth	75	—	100	100	50
Breast pocket	87	—	100	100	50
90° flexion	100	—	100	100	100
Perpendicular to chest	100	—	0	0	50
Perineum	100	—	100	100	50
Anus	48	—	100	0	50

[a] Santschi, 1958.

Comments: The amputee was able to position the experimental arm (at the mouth, breast pocket, the perineum, and at 90 deg. flexion) by using active rotation of the elbow. Full operation of all components was possible at these locations. The arm can be positioned at the anus by passive stump motion. The rear control cable is slack in this position and thus only terminal device movement was possible. It was not possible for the amputee to maintain the arm at the sixth test location, held horizontal at the shoulder, without activating the rear control cable. It was difficult for the amputee to maintain the prosthesis in this attitude for more than a few seconds.

In general the ranges of motion obtained and the areas of effective

use of the experimental arm compared favorably with the conventional arm. Operation of a component at a particular prosthetic position was either completely successful or impossible and did not suffer from the partial restriction of range that occurred with the conventional arm when the travel of the control cable was reduced.

Speed Tests

Objective: To obtain a measure of the speed with which the amputee can initiate the motion of each function of the prosthesis.

Procedure: Reaction time (RT) was measured to a visual stimulus, consisting of the illumination of one command word on a display such as "flex" or "extend." The amputee stood in front of the display with his prosthesis locked midway along the range of motion of each component. His instructions were to activate the proper motion of the prosthesis as soon as the command word was illuminated. The display was illuminated by the experimenter who stood behind the amputee and used a concealed switch to select the command to be illuminated. Before each trial the verbal preparatory signal "ready" was given with a waiting period that ranged from one to two seconds. Reaction times were measured simply as the time elapsed between illumination of the command display and the first detectable movement in the desired direction (usually 1 deg. of movement).

Simple and complex RT were taken. The difference between these was that in the complex situation the amputee did not know the command to be presented, while in the simple RT test he was specifically informed as to the expected command before each trial.

More than two hours of practice, with the display and all recording apparatus in use, preceded the actual measurements. This practice was given one day prior to actual testing. On the day of testing 10 warm-up trials were administered for each arm function. Then 10 simple RT trials were given for each function with the order of commands randomized. On the following day, complex RT trials were presented, again in a random presentation order, preceded by 60 warm-up trials. Occasional blank trials were inserted into the testing sequence to discourage the amputee from anticipating the command.

Apparatus: A four-channel Sanborn recorder (Model 150–2900S) was used for data recording. The event marker channel of the recorder was part of the circuit used to illuminate the command display and thus provided an instantaneous measure of the start of a trial. Equipment for recording the movement around each joint of the prosthesis consisted of a regulated d.c. power supply, a continuous turn precision potentiometer attached to the joint, a Brush d.c. preamplifier, and one channel of the oscillograph (including amplifier).

When simple and complex RT scores were measured, three chan-

nels of the oscillograph were used, one for each joint of the prosthesis, along with the event marker channel.

In later simple RT tests additional equipment was added to determine: 1. changes in the tension on the amputee's control straps during activation of controls, and 2. changes of gas pressure in the line from the CO_2 cylinder to the valve complex within the prosthesis. Changes in control strap tension were monitored by a strain gage inserted in the harness strap. The strain gage was connected to an Offner strain gage amplifier and to one channel of the recorder. Gas pressure was monitored with a Statham pressure transducer connected also to the strain gage amplifier and the oscillograph. In these later tests it was only possible to monitor movements of two active components of the arm at one time.

All RT trials were recorded at a paper speed of 100 mm./sec., and data records were read to the nearest mm.

Results: Means and standard deviations for simple and complex RT trials for each function of the experimental arm are summarized in Table 8. Separate analyses of variance were performed on the simple and complex RT scores. The results of these analyses are summarized in Tables 9 and 10. Mean RTs obtained previously with the conventional prosthesis are included in Table 8 for comparison.

TABLE 8.—*Mean Reaction Times*

Movement	Simple RT (sec.)		Complex RT (sec.)	
	Mean	SD	Mean	SD
AIPR:				
Flex	0.69	0.16	1.32	0.16
Extend	0.87	0.11	1.39	0.22
Pronate	1.05	0.18	1.44	0.24
Supinate	0.57	0.07	1.08	0.18
Close	0.53	0.08	0.90	0.29
Open	0.29	0.06	0.75	0.17
Overall	0.67	0.27	1.14	0.32
Conventional:				
Flex	0.30	0.04	0.60	0.30
Extend	0.32	0.06	0.63	0.15
Open	0.63	0.08	0.84	0.10
Overall	0.42	0.16	0.69	0.15

TABLE 9.—*Analysis of Variance of Simple RT Scores*

Source	*df*	*SS*	*MS*	*F* Ratio
Between	5	3.5689	0.7138	[a] 57.10
Within	54	0.6731	0.0125	

[a] $p < .001$

TABLE 10.—*Analysis of Variance of Complex RT Scores*

Source	*df*	*SS*	*MS*	*F* Ratio
Between	5	3.9504	0.7901	[a] 14.91
Within	54	2.8643	0.0530	

[a] $p < .001$

Comments: For the simple RT testing situation, the average RT for the six functions of the experimental arm was 0.67 seconds. Complex RTs were about 0.5 seconds longer, averaging 1.14 seconds. Considering the two control valves separately, the two fixed control position functions (opening and supination) were the fastest to be initiated. By fixed control position it is meant that these functions are actuated merely by pulling the proper control cable to its maximum extent and no searching was necessary to find the proper control location.

For the four-position valve, both simple and complex RT scores increased from first to third control position (flexion to extension to pronation) and, as noted, dropped considerably for the last position (supination). The differences between all four *simple RT* means of the four-position valve were found to be statistically significant ($p < .01$) by a Duncan's range test. A test of the *complex RT* means for these four positions revealed that supination was significantly ($p < .01$) faster to be initiated than the other three functions which did not differ significantly among themselves.

For the two-position valve, opening was significantly ($p < .01$) faster than closing in the simple RT situation, while the difference was not significant in the complex situation.

The number of errors in selection of the proper function of the arm was the second performance measure taken in the complex RT situation. Since all three joints were monitored on every trial it was possible to note all movements of the prosthesis and to determine those

that did not correspond to the commands given. On almost every opening trial a small amount of closure occurred as the amputee traveled through the closing control position. This closure was unavoidable and does not constitute a true error. No other errors were made and the amputee demonstrated perfect control for these tests.

Breakdown of reaction time trials. Several simple RT trials were also performed with changes in gas pressure and tension of the control strap monitored as described before. These measurements were taken to determine the temporal sequence of events occurring in the activation of a prosthetic function. Quantitative changes in tension and gas pressure were not of interest. About 25 measurements were taken for each function of the prosthesis. The following discussion is based on the average of the best five trials for each function.

The measurements provided four temporal reference points: 1. illumination of the command display, 2. the first noticeable change in control strap tension, 3. the drop in CO_2 pressure as the control system was advanced through the sequence of control positions, and 4. the beginning of movement of the arm. When simple RT is subtracted from complex RT for a function the difference provides an index of the added complexity of the task and the concurrent decision time required by the subject. The total complex RT has thus been subdivided into decision time and into four other components using these reference points. The breakdown is given in Figure 13, wherein a description of each component is also provided.

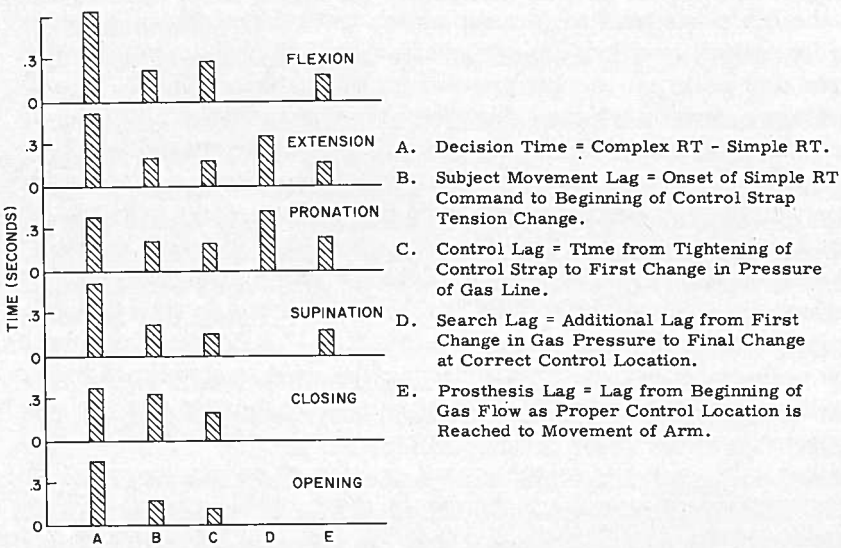

FIGURE 13.—Breakdown of reaction times.

Decision time and subject movement lag. The additional time involved in initiating movement when the required movement is not known before is assumed to reflect the additional central processing and decision time required in such a situation. As indicated before, this measure was derived indirectly by subtracting the means of the simple RT scores from the complex for each function. The average decision time was about 0.5 seconds, ranging from a low of 0.37 seconds for closing to a high of 0.61 seconds for flexion.

The time required to begin movement in the simple RT situation, called the "subject movement lag" here, is thought to reflect a minimal perceptual and central processing lag and the lag inherent in the human motor system. This time, measured in the simple RT situation, as described in Figure 13, was nearly constant for the functions of the four-position control valve, but for the two-position valve was twice as long for closing as for opening. Except for closing, the lag was about 0.2 seconds for all motions and probably represents a limiting value for the stimulus and muscle groups involved. In closing, the longer time lag may reflect a more cautious approach to the initiation of movement in order to avoid overshooting the control position. However, a similar increase in this component of the overall RT did not occur for flexion, the first control position of the four-position valve.

Control lags. The time from onset of body movement to the first drop in gas pressure represents the time taken to travel through the control valve to a control position. For supination, on which the amputee simply flexes his stump until stopped by the limit of the control cable, no noticeable drop in gas pressure occurred until the end of the cable was reached (the supination control position). The three earlier control positions on the chain were bypassed so rapidly that three tiny peaks on the gas pressure record corresponding to the momentary activation of these functions were just visible, although no movement occurred. The total travel time for supination was about 0.16 seconds. Extension and pronation movements were made more slowly since they required about the same time merely to reach the first control position (flexion) and required an additional 0.34 or 0.42 seconds, respectively, to reach the final, proper control location. For flexion, the first control position of the four-position valve was the desired end-point of the control motion. It took 0.29 seconds to reach this position on flexion trials, reflecting the need to decelerate before reaching this position. In all three of these cases the rate of travel was apparently slower since the amputee was not assisted by a fixed mechanical stop in finding the control position, as he was in supination, but depended on cues from changes in control cable tension and gas venting noises as each control position is reached and passed. Other

cues may also come from the extent of stump flexion associated with each control position and possibly slight differences in the forces required by the control valve at each location. Nevertheless, these cues are not as useful as the fixed mechanical stop provided for supination, if time of travel to find the proper control location is taken as a criterion.

Similarly, for the two-function valve, the fixed-stop control position for opening was reached much faster than was that for closing, even though the distance to be traveled along the control cable was longer. The control travel time taken to reach the closing position was 0.20 and 0.11 seconds for opening.

Prosthetic or mechanical lag. For the four-position valve function a nearly constant lag of 0.20 seconds occurred from the time the correct control valve position was reached until movement of the arm actually began. An insignificant lag was found in the operation of the functions of the two-phase valve. The difference in these lags may be due to one of many factors, for example, to differences in the masses of the objects being moved or in the internal operation of the motor units.

In summary, the mean RT associated with each function of the experimental arm:

1. Was longer (both simple and complex RT) than that for the comparable function of the conventional arm, except in the case of terminal device opening, which was a two-step process with the conventional arm (locking of elbow followed by opening of the hook).

2. Was longer for functions of the four-position valve than for the two-position valve, except for supination, both in simple and complex RT situations.

3. Was 0.5 seconds longer in the complex RT situation on the average.

No errors in selection of the proper prosthetic movement were observed at all in the complex situation.

To the extent that RT values can be broken down validly in the manner described earlier, the differences in RT from function to function of the experimental arm, in addition to an unexplained variation from function to function in "decision time," can be explained as the result of two factors:

1. The presence or absence of a fixed prosthetic lag (0.2 seconds) that occurs after the proper control position has been reached.

2. A wide variation from function to function in the actual time taken to travel through the control valve to reach the proper control location. This lag was measured from the beginning of the actual control movement until the control position was reached. For fixed-stop control position (end of control cable) functions the travel time

was a minimum (0.11 seconds for terminal device opening and 0.16 seconds for supination), while for other functions this control movement time lag was as high as 0.61 seconds (pronation).

Precision of Motion

Objective: To obtain a measure of the precision with which the amputee can operate each function of the prosthesis.

Procedure: Each movement of the experimental arm was tested (flexion, extension, pronation, supination, opening, and closing). The results were compared with those obtained previously with the conventional prosthesis for flexion, extension, and terminal device opening.

On each trial the amputee was required to match the position of one component of the prosthesis with that of a visual indicator located along the range of motion of the component. All trials started from one or the other extreme position of the component. In the case of the elbow unit, five test positions along the range of motion were employed. Those trials which started from the position of full flexion (135 deg.) were termed "extension" trials, and those from the opposite extreme were "flexion" trials. Four test positions were used with the terminal device and five with the wrist unit. All trials were performed with the amputee standing with control cables relaxed before start. Twenty trials were performed at each combination of test position and starting directions, with order of presentation randomized for both of these factors. All trials with one unit were completed before proceeding to the next one. Short rest periods were taken after every 10 trials. The amputee's instructions were "to work at a normal pace and be as accurate as possible."

Malfunction of the recording apparatus made data reduction impossible for one set of trials of the wrist unit.

Thirty minutes of practice were given for each component of the prosthesis before testing began for that unit.

Apparatus: Movement around each joint of the prosthesis was monitored by the attachment of a precision potentiometer that was part of a circuit providing a voltage analog to the degree of movement. Each trial was recorded on a four-channel Sanborn recorder at slow speed. The number of movements, time to completion, and final deviation from the test position were derived from the recordings.

Results: Mean times to completion and errors (number of readjustments) per trial are shown in Figure 14 as a function of test angle. These results are averaged over the two starting positions. Each point on the curve represents the average of 40 trials (38 for the wrist). Comparison curves have been included wherever possible. These represent the performance of this amputee with his conventional prosthesis meas-

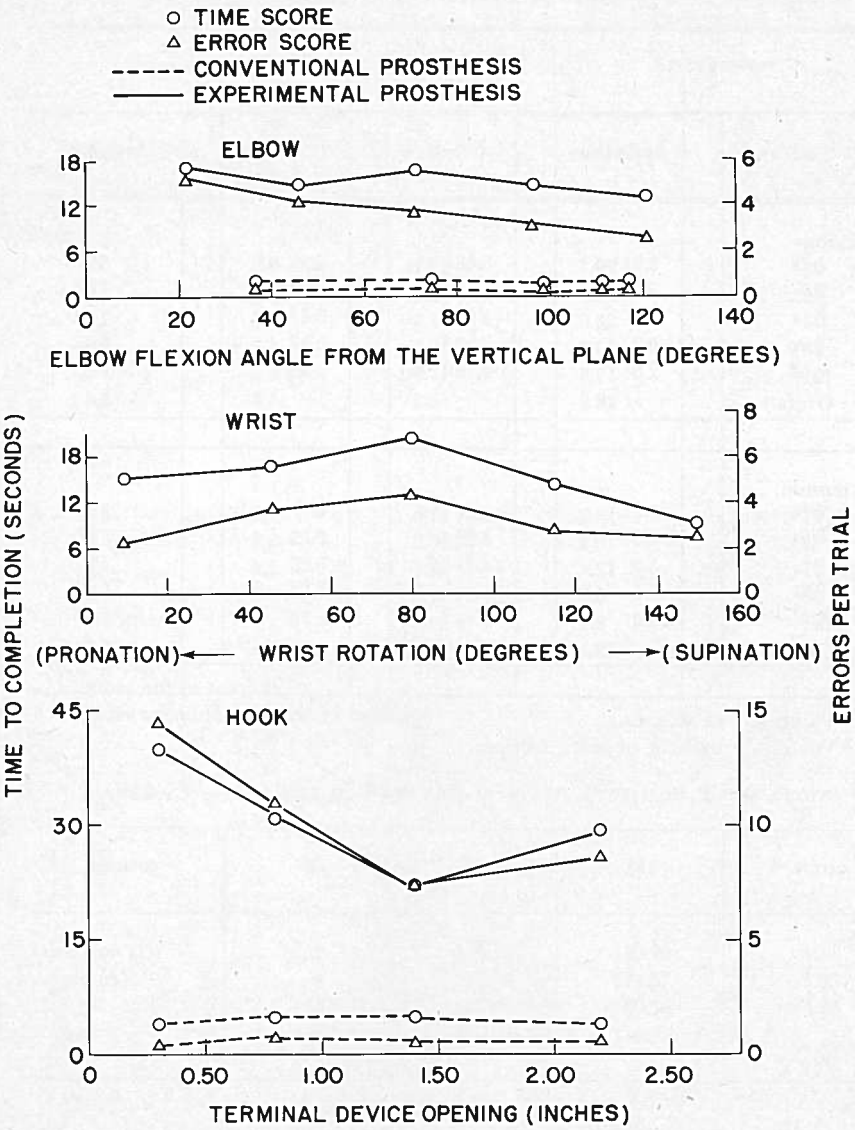

FIGURE 14.—Precision of motion scores for units of the experimental arm.

ured previously. Tables 11, 12, and 13 summarize these scores for all combinations of test position and starting location.

The results for each unit of the experimental arm were analyzed in a separate two-way analysis of variance, with starting position (Direction) and test position (Angle) as independent variables and time to completion as the dependent variable. The results of these analyses

TABLE 11.—*Precision of Motion Test Scores for Elbow Unit*

Test angle	Time scores [a]		Error scores [b]	
	Mean	SD	Mean	SD
Flexion:				
21°	19.7	12.1	6.3	6.1
46°	13.6	11.2	3.1	4.3
71°	23.0	21.3	5.3	7.5
96°	20.3	10.8	4.1	4.1
121°	17.5	11.8	3.2	3.0
Overall	18.8	14.3	4.4	5.4
Extension:				
21°	15.2	13.6	4.2	5.0
46°	16.0	10.8	5.2	4.2
71°	12.4	23.1	2.4	4.9
96°	8.6	27.1	2.9	3.1
121°	8.4	14.9	2.3	5.5
Overall	12.1	19.2	3.4	4.7

[a] Values are in seconds.
[b] Values are number of extra motions.

TABLE 12.—*Precision of Motion Test Scores for Terminal Device*

Test position	Time scores [a]		Error scores [b]	
	Mean	SD	Mean	SD
Opening:				
0.28	32.2	35.6	13.2	15.4
0.77	36.9	39.6	10.9	7.8
1.41	19.6	12.4	7.8	4.6
2.18	24.0	27.6	9.0	9.5
Overall	28.2	31.3	10.2	10.3
Closing:				
0.28	47.5	35.4	15.8	13.5
0.77	25.9	22.8	10.5	12.9
1.41	22.6	16.8	6.8	5.3
2.18	33.4	30.1	8.2	7.9
Overall	32.3	29.6	10.3	10.2

[a] Values are in seconds.
[b] Values are number of extra motions.

TABLE 13.—*Analysis of Variance of Wrist Precision Time Scores*

Source	*df*	*SS*	*MS*	*F* Ratio
Direction (D)	1	189.99	189.99	1.11
Angle (A)	4	2696.28	674.07	[a] 3.95
D × A	4	2917.43	729.36	[a] 4.28
Error	180	30693.74	170.52	

[a] $p < .01$

are summarized in Tables 14, 15, and 16. Differences in levels of the significant variables were interpreted with Duncan's multiple range tests (Edwards, 1960) using the .01 significance level.

Comments: The average final error of positioning was found to be quite small for all functions of the arm, on the order of ± 1 deg.

Trials with the elbow unit required about 15 seconds and for re-adjustments to reach the final position. The analysis of variance (Table

TABLE 14.—*Precision of Motion Test Scores for Wrist Unit*

Test angle	Time scores [a]		Error scores [b]	
	Mean	SD	Mean	SD
Pronation:				
10°	10.0	11.4	1.4	1.5
45°	11.2	8.8	2.2	2.3
80°	19.0	16.4	4.0	4.9
115°	17.4	14.2	3.2	2.6
150°	13.2	9.5	1.7	1.8
Overall	14.2	12.9	2.5	3.1
Supination:				
10°	19.2	11.8	3.1	2.9
45°	22.6	17.8	5.2	4.9
80°	22.3	14.2	4.5	3.4
115°	11.7	8.9	2.6	5.7
150°	4.9	4.3	2.2	3.9
Overall	16.1	14.7	3.5	3.7

[a] Values are in seconds.
[b] Values are number of extra motions per trial.

TABLE 15.—*Analysis of Variance of Elbow Precision Time Scores*

Source	*df*	*SS*	*MS*	*F* Ratio
Direction (D)	1	2251.21	2251.21	[a] 7.72
Angle (A)	4	666.74	166.68	<1
D × A	4	1328.46	332.12	1.14
Error	190	55425.55	291.71	

[a] $p < .001$

14) confirmed the impression that average performance was relatively flat over the range of motion of this component. Direction was a significant effect. Analysis of the individual means showed that trials starting from full extension were better than those from full flexion,

TABLE 16.—*Analysis of Variance of Terminal Device Time Scores*

Source	*df*	*SS*	*MS*	*F* Ratio
Direction (D)	1	688.91	688.91	1
Angle (A)	4	7184.28	2394.76	[a] 2.22
D × A	4	3816.89	1272.30	1.18
Error	180	164221.90	1080.41	

[a] $p < .10$

but only for the upper three test positions. Why this should be so is not apparent.

Trials with the wrist unit also required about 15 seconds to complete with three errors per trial on the average. Both Angle and Direction X Angle were significant effects in the analysis of these data (Table 15). Analysis of the individual means revealed that performance was slowest at the center test position when averaged over starting direction, but for each starting direction considered separately performance was faster for the two test positions farthest away from the starting location.

Performance was worst with the terminal device, requiring 30 seconds to complete a trial and 10 readjustments. The significant effect of Angle or size of opening (Table 16) was due to the inferiority of performance at the first test position (0.28 in.) regardless of starting position.

In general the results indicated that the amputee's ability to make fairly precise adjustments with the prosthesis was not good. The extremely high variability associated with these tests may indicate that some improvement could be expected after a longer period of use of the arm. Inspection of the data did not reveal any obvious trends toward improvement during testing, however, and in view of the relatively long training period a rapid significant improvement would be unlikely.

In many situations a gross control ability may be sufficient to accomplish the task. These results would then not meaningfully indicate the potential of this prosthesis. For those situations where precise control is necessary the prosthesis will be found less satisfactory.

On some trials the amputee was able to regulate the speed of movement of the component under test. The regulation was not continuous or graded but merely showed he had managed to "crack" the control valve and achieve a submaximal speed. He was not able to vary the speed to any large degree without losing the control position or slipping over into the full (maximum speed) control position. Still, per-

formance was much better for those trials on which the amputee could use a submaximal speed.

Gottlieb and Lyman (1951) have discussed in detail the control problems involved in precise prosthetic movements. In making movements of fairly large extent, it is apparent that the speed of movement of the prosthetic unit is important in at least two ways:

1. Assuming certain temporal variabilities are associated with (a) the decision to stop movement, (b) the amputee's physiological control response, (c) the mechanical response of the control system, and (d) the mechanical response of the motor unit of the prosthesis, then the effects of these variabilities in terms of absolute deviation from the intended end-point clearly will be larger for faster rates of movement. For a particular temporal error the prosthesis will undershoot or overshoot the end-point more at a higher speed than at a lower one.

2. At faster rates of travel of the prosthetic component (and thus faster rates of approach to the end-point) the amputee will have to make his decision to release the control at an earlier point in his approach to the end-point to avoid overshooting it. For example, if the total combined amputee RT and mechanical lag of the prosthesis is as low as 0.2 seconds, then at 100°/sec. (the speed of the terminal device) the amputee must decide to release his control cable at a point 20 deg. before the end-point. Assuming that with practice some irreducible minimal time lag can be reached, the physical point at which the decision to stop must be made will be further and further ahead of the end-point as the speed of the prosthesis increases. Clearly with the limited number of reference points available to the amputee he must essentially make a distance judgment in determining the ideal point for release of the control cable. It is generally accepted that as the size of the distance judged increases absolute accuracy decreases, although relative accuracy may remain constant.

Another factor important in precision of motion is the ability to make fine (small) corrective movements when the primary movement has ended close to the end-point, but outside the area of error tolerance. If, for instance, the error at the end of the primary movement is 3 deg., but the amputee can barely make a movement smaller than 6 deg. then he will require at least two more movements to reach the end-point. Inspection of data records for precision of motion trials revealed that the smallest movements made with the terminal device were of the order of 7 to 10 deg. while with the wrist and elbow units they were 3 to 5 deg. Two factors may interact to determine the fineness of these movements: 1. the minimal control ("on") pulse which the amputee can deliver to the control system, and 2. the speed of movement of the prosthetic unit during this minimal temporal interval.

Which factor(s) is at fault here is not known and would require very precise instrumentation to determine. In general the ability to make fine corrective movements was poor, particularly for the terminal device.

It seems that the inability to achieve a satisfactory level of precision in positioning the components of the experimental arm, particularly in the case of the terminal device, can be reasonably explained in terms of the high rates of speed associated with these components and the inability to perform small corrective motions with them.

Analysis of Coordinated Motion

Objective: To assess the degree of independence the amputee can achieve with the prosthesis in everyday tasks.

Procedure: A series of 15 tasks was chosen for use in this phase of the evaluation. These tasks were chosen to be representative of the more difficult activities an amputee might perform in his daily routine. Each task involved a specified set of activities, although the specific means of achieving each task was left to the amputee to work out himself. These tasks have been described in detail previously (Lucaccini et al., 1965). The tasks include: sharpening a pencil, placing a pencil in the breast pocket, drinking soup with a spoon, drinking from a cup and from a glass, transport of a briefcase, use of a hanger, answering a telephone, opening and closing a door, removing and replacing a screw-type jar lid, unzipping and zipping the trouser fly, taking a cigarette from the breast pocket and placing it in the mouth, removing a bill from a wallet and replacing it, making a signature, and preparing a standard place setting for one person. All but the last task were performed under instructions "to work at a normal pace and be sure to perform the task in the proper manner." The last task was conducted under instructions emphasizing speed of performance, although the task was not considered completed until the entire place setting was correctly established.

For all tasks except the signature task two criterion scores were taken: number of errors made (extra movements, dropped objects, etc.) and time to completion. On the signature task, quality of the signature was the only criterion.

For all but the table setting task, the amputee was allowed to practice the task until he and the observer agreed that his performance was adequate. Then a series of 50 trials was performed on the task, with criterion scores taken for each trial. Rest periods were taken after every 10 trials or sooner if requested. If the amputee was able to complete five successive trials within a total range of variation of 0.5 seconds (for tasks less than 15 seconds) or 1.0 seconds (for tasks over

TABLE 17.—*Amputee Opinion Rating Scale*

Operational condition	Adjective rating	Description	Numerical rating
Normal operation	Satisfactory	Excellent	1
		Good	2
		Satisfactory with mildly unpleasant characteristics	3
		Acceptable with unpleasant characteristics	4
Emergency operation	Unsatisfactory	Unacceptable for normal operation	5
		Acceptable for emergency performance only	6
		Unacceptable even for emergency use	7
No operation	Unacceptable	Unacceptable—dangerous	8
		Unacceptable—incontrollable	9
	Catastrophic	Unacceptable—physical damage	10

15 seconds) testing was stopped for that task. The amputee was aware of this criterion but was not informed of his scores during testing. He was instructed to ignore this criterion as much as possible and concentrate on quality of performance.

Practice on the table setting task was limited to one trial. Only 25 trials were performed on this task, with rest period after every five trials.

At the end of each task the amputee rated his performance with the prosthesis on a 10-point scale that ranged from "excellent" to "unacceptable." The scale is shown in Table 17.

Apparatus: The apparatus used in these tests consisted of items necessary for the tasks listed above (e.g.—pencils, silverware, dishes, etc.). A stopwatch was used to measure trial duration. Readings were taken to the nearest 0.1 seconds.

Results: Overall results on the standard sequence tasks, excluding signature and table setting tasks are summarized in Table 18, with results obtained previously with the conventional arm included for comparison. The briefcase task was not performed since the elbow unit could not raise the unloaded briefcase to table height. Two other tasks, manipulating the trouser zipper and putting a cigarette in the mouth, were not performed due to the amputee's unavailability. These tasks are particularly difficult and were apparently avoided by him. Unfortunately, however, they represent activity in two critical body areas and would have provided useful information.

Scores on the 10 standard sequence tasks that were completed are presented graphically in Figure 15. Each point on these curves represents the average of 100 measurements (10 trials $\times$ 10 tasks), and the points are presented for successive 10 trial blocks. Data previously obtained with the conventional prosthesis are included for comparison. These scores are summarized in Table 19.

Performance on the table setting task is presented in Figure 16, with data for the conventional arm included for comparison. These scores are summarized in Table 20.

Performance on the signature task was found to be acceptable. The amputee was able to make a legible signature using the prosthesis only as a passive holding device in from 10 to 20 seconds.

Comments: Performance on the standard sequence tasks was 50 percent longer with the experimental arm than with the conventional arm and involved four times as many errors (an average of 1.3 versus 0.3 errors per trial). An analysis of variance of the error scores was performed. The results are summarized in Table 21. Both tasks and blocks were significant main effects, while their interaction was not. It appears, then, that: 1. performance was significantly better for some tasks than for others, 2. a significant improvement in performance occurred

TABLE 18.—*Summary of Performance on Standard Tasks*

Task	Average time per trial (sec.) [a]	Average of best 5 trials (sec.)	Total errors	Total trials completed	Average errors	Was criterion reached?	Amputee rating of task
Conventional arm:							
Pencil I	11.0	9.8	0	22	0.00	Yes	2
Pencil II	8.0	6.1	12	50	0.24	No	2
Soup	9.0	8.5	5	28	0.18	Yes	2
Coffee cup	18.0	15.1	16	50	0.32	No	6
Glass	13.5	12.0	16	50	0.32	No	5
Hanger	6.5	5.5	5	32	0.16	Yes	2
Telephone	17.0	15.7	16	50	0.32	No	2
Door	10.0	8.0	3	45	0.07	No	5
Jar	20.0	17.5	29	50	0.58	No	5
Billfold	19.0	13.1	9	50	0.18	No	3
Experimental arm:							
Pencil I	14.8	12.5	44	50	0.88	No	1
Pencil II	18.4	13.4	74	50	1.48	No	2
Soup	24.5	18.4	106	50	2.12	No	2
Coffee cup	15.1	11.8	56	50	1.12	No	2
Glass	13.9	12.0	37	50	0.74	No	2
Hanger	17.0	14.5	54	50	1.08	No	2
Telephone	18.0	14.5	44	50	0.88	No	2
Door	23.1	16.6	78	50	1.56	No	2
Jar	22.3	18.0	58	50	1.16	No	3
Billfold	28.8	25.9	88	50	1.76	No	2

[a] These values are approximate for the conventional arm.

TABLE 19.—*Performance on 10 Standard Sequence Tasks for 10-Trial Block*

Block	Times [a]		Errors [b]	
	Mean	SD	Mean	SD
1	21.3	6.0	1.6	1.5
2	20.2	6.2	1.4	1.2
3	20.4	7.4	1.3	1.3
4	17.1	7.9	1.0	1.2
5	18.2	6.0	1.0	1.1
Overall	19.4	6.3	1.3	1.3

[a] Values are in seconds.
[b] Values are number of extra motions, etc., per trial.

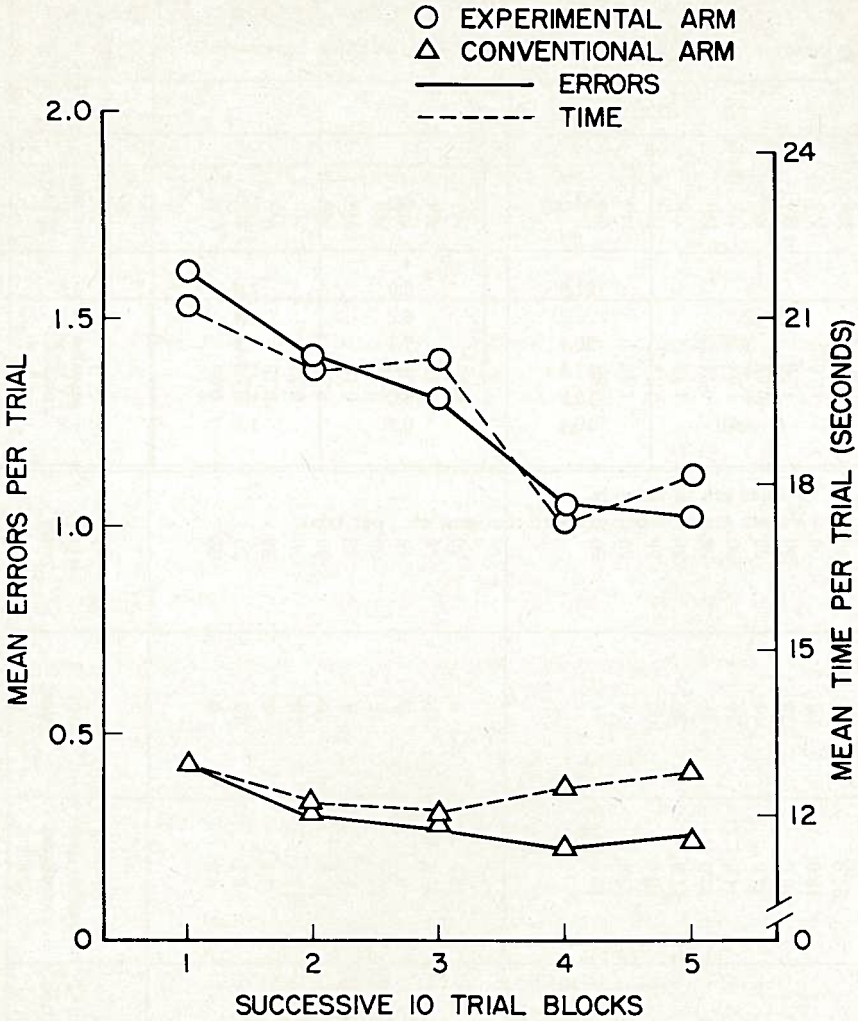

FIGURE 15.—Performance on standard sequence tasks.

TABLE 20.—*Performance on Table Set Task for 5-Trial Blocks*

Block	Times [a]		Errors [b]	
	Mean	SD	Mean	SD
1	104.8	19.2	12.4	8.2
2	84.2	54.8	5.6	2.6
3	85.2	14.2	5.6	2.6
4	87.2	10.2	6.0	3.2
5	75.4	1.3	5.2	3.2
Overall	87.8	29.8	6.8	4.5

[a] Values are in seconds.
[b] Values are number of extra motions, etc., per trial.

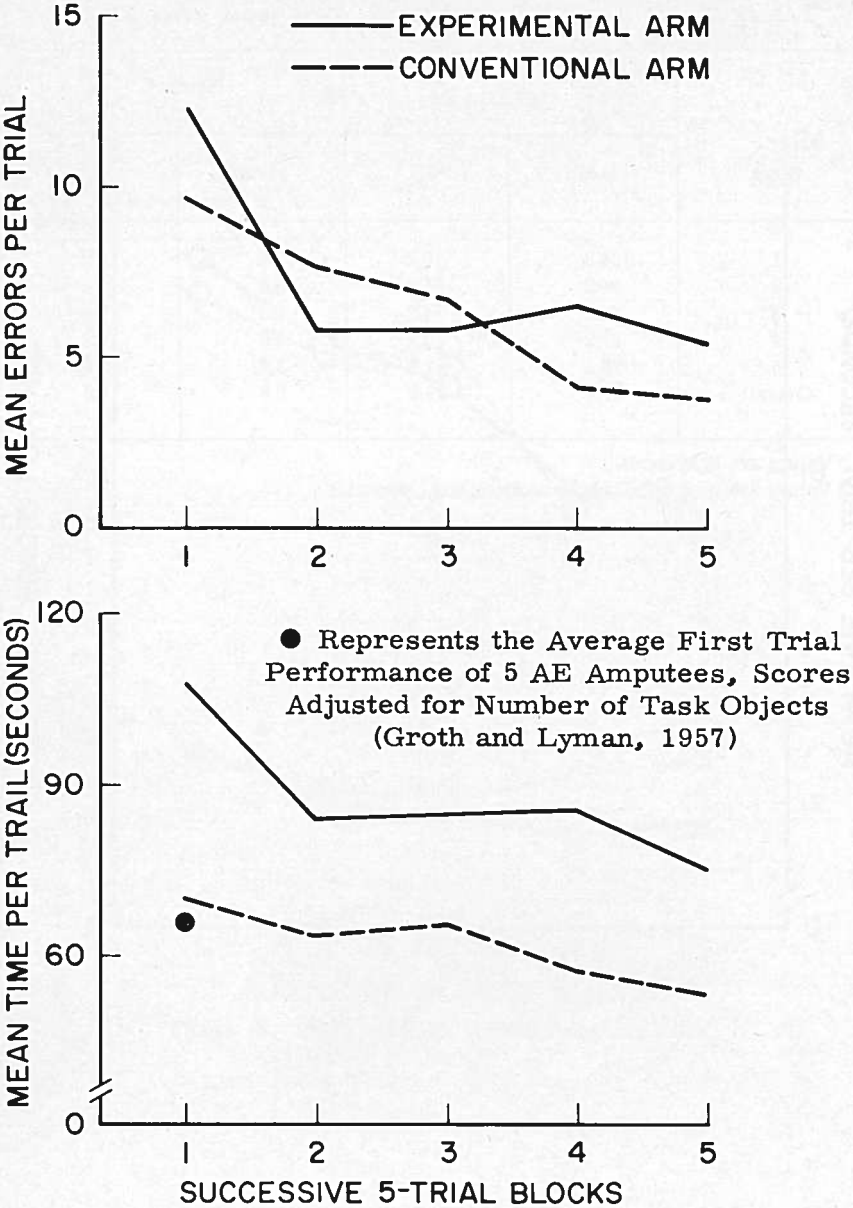

FIGURE 16.—Performance on table setting task.

as testing progressed, and 3. the improvement in performance over trials was not significantly different from task to task. A Duncan's range test of the mean performance over all tasks for 10-trial blocks revealed that a significant ($p < .05$) decrease in error rate occurred from first to fourth blocks but not from fourth to fifth.

TABLE 21.—*Analysis of Variance of Error Scores for 10 Standard Sequence Tasks*

Source	*df*	*SS*	*MS*	*F* Ratio
Tasks (T)	9	87.30	9.70	[a] 5.19
Blocks (B)	4	24.67	6.17	[a] 3.30
T × B	36	44.09	1.22	1
Error	450	840.30	1.87	

[a] $p < .001$

A summary of the specific errors that occurred most frequently on each task is presented in Table 22. The most frequent errors occurred with the terminal device, which also received the most use. These errors consisted of failure to grasp an object properly necessitating regrasp and of failure to close the terminal device in one movement at the end of the task. The most serious error, occurring on the three drinking tasks was spilling of liquid in transport. Spillage occurred sometimes at the beginning of movement as the arm "jerked" the spoon or vessel away from the table top. Also spillage occurred upon return of the glass to the table top when the amputee was unable to stop his extension motion soon enough and banged the vessel into the table top. Other frequent errors involved the interruption of a motion partway along the intended pathway due to the failure of maintaining the proper control cable position. Interrupted motions were most frequent with the elbow unit during the task, and, as already mentioned, with the terminal device at the end of the task. Neither dropping of objects nor selection of the wrong function of the arm were frequent errors. Errors were lowest for the wrist unit, then the elbow unit, and much higher for the terminal device. However, the rank order reflects the frequency of use of these units.

On the table setting task performance was about equal for both prostheses in terms cf mean errors, while the experimental arm was slower than the conventional arm by about 50 percent. Comparison with the average task time for five above-elbow amputees with VO hook (Groth & Lyman, 1957, cf. Fig. 16) indicates that these task times

TABLE 22.—*Analysis of Variance of Error Scores for Table Set Task*

Source	*df*	*SS*	*MS*	*F* Ratio
Between blocks	4	186.56	46.64	[a] 1.99
Within blocks	20	468.96	23.45	

[a] $p < .25$

are not unrealistic. An analysis of variance of these error scores was performed and is summarized in Table 23. Blocks was found to be a significant effect and a Duncan's range test revealed that a significant ($p<.05$) improvement in error rate occurred from the first to the second five-trial block, but that changes from second to fifth blocks were not significant. On this task, which involved terminal device activity primarily, most of the errors were adjustments or extra motions. Dropped items and extra grasps made up about 20 percent of the total errors, with regrasps contributing much more than dropped items.

TABLE 23.—*Frequently Committed Errors on Standard Sequence Tasks*

Task	Error
Pencil I	Missed grasp of pencil on table; flexed instead of extending arm at end of task; extra attempts needed to close t.d. at end; C.
Pencil II	Missed grasp of pencil on table; C.
Soup	Extra attempts needed to dip a full spoon of soup; spillage on raising spoon to mouth; C.
Cup	Spilled during sipping from cup; spilled on return of cup to table top.
Glass	Extra attempts needed for secure grasp; spilled on return of glass to table top.
Hanger	Grasp orientations poor for hanging hanger on clothes tree; interrupted extension at end of task; C.
Phone	Interrupted flexion on transport of phone to ear; C.
Door	Extra attempts necessary for secure grasp of door knob at start; C.
Jar	Extra attempts necessary for secure grasp of lid; jar lid not started properly in threads of jar requiring restart of tightening; flexion instead of extension at end of task.
Billfold	Missed grasp of bill in wallet and on table top; interrupted flexion motion during task; C.

In summary, evaluation tests of coordinated motion revealed that: 1. performance with the experimental arm was slower than the con-

ventional arm by 50 percent both on the 10 standard tasks performed at a normal pace and on another task performed under instructions emphasizing speed as well as accuracy, 2. performance with the experimental arm involved four times the number of errors made with the conventional arm on the 10 standard tasks, while error rates did not differ greatly between prostheses on the speed task.

Just from mechanical considerations the experimental arm can be expected to be somewhat slower than the body-powered prosthesis. Errors are probably a more meaningful criterion in terms of smooth and adequate task completion. On the table setting task error rates did not differ for the two prostheses. About seven errors per trial were committed with each prosthesis indicating that the task is extremely difficult for both arms and also that neither arm is really adequate for such a task.

On the basis of error rates for the 10 standard tasks it appears that the experimental arm is inferior to the conventional arm. However, amputee ratings of performance did not reflect this inferiority (see Table 18). On the contrary the amputee rated his performance with the experimental arm as equal to or better than with the conventional arm for *all* 10 tasks. Whether these ratings can be relied upon is doubtful since: 1. the ratings of the two arms were made at widely separated intervals, 2. the scale values assigned to performance with the experimental arm by the amputee were identical for eight of the ten tasks, and 3. it was apparent from conversation with the amputee that he was quite pleased with the prospect of controllable external power and may have allowed a "halo" effect to bias his judgments.

On an absolute basis, performance was adequate in the majority of tasks, although in view of the large number of errors it could be improved considerably. Still, most errors were relatively minor and did not substantially hamper completion of the task.

SUMMARY AND RECOMMENDATIONS

Evaluation Reviewed

Evaluation tests revealed the following facts regarding the operation of the experimental arm in comparison to performance with the conventional prosthesis:

1. The range of motion of the device was adequate for everyday activities and versatility was increased by the addition of the wrist rotation feature.

2. Initiation of a prosthetic movement was much slower with the experimental arm, reflecting three factors: (a) the necessity to "search" for control positions, (b) the introduction of mechanical and/or pneu-

matic lags into the operation, and (c) for the complex RT situation, the increased complexity of the choice of functions.

Despite the increase in RT necessary to initiate movements, no errors in selection of function occurred in RT tests, and in the evaluation in general such errors were infrequent.

3. Precision of motion presented certain problems particularly in the case of the terminal device. The speeds of the various functions had been preset by the designer and it appeared that for the amputee test subject the preset speeds were excessive for precise control. The designer, in a personal communication, pointed out that in his experience most amputees were satisfied with the preset elbow flexor and wrist rotation speeds, but differed in their preferences for the terminal device adjustment. Our results seemed to confirm this but would require additional data to determine the optimal settings on an individual amputee basis. Coordination activity on a series of everyday tasks was found to be slower and involved more errors than with the conventional arm. Nevertheless, these tasks were performed adequately and in general the errors noted were relatively minor.

The designer's claims contended that this prosthesis provides the following advantages:

a. additional prosthetics motions
b. more precise control of position
c. improved digital dexterity
d. fewer and simpler controls
e. smaller body motor excursions
f. reduced body power requirements
g. improved sensory perception via finely graded force feedback

Based on our experiences we are inclined to agree with these claims, with three exceptions:

1. Digital dexterity is improved over that of bulky hand devices such as employed in the Heidelberg prosthesis (Lucaccini et al., 1965), but offers no advantage over current hooks now in use.

2. Sensory feedback, particularly force, is not enhanced by this prosthesis, since, as noted earlier the force required to operate the controls is essentially constant from position to position once the initial compression of CO_2 in the valve unit required to initiate control cable travel is effected. Some force feedback is provided from the friction generated in the tipping of each control valve module actuator; this is insufficient to allow the amputee to crack the valve to any degree and probably does not provide any information other than to allow the amputee to count each control position as it is passed. The major cues are probably kinesthetic derived from stump travel. Whatever the

feedback available, however, the RT tests clearly demonstrate the superiority of the end-of-the-cable control positions which do not depend on precise sensory feedback to be located.

3. Although the smooth and positive action of the prosthetic motor units permits predictable operation of these units and the ability to halt and lock their positions anywhere along the range of motion is simply achieved, precision of motion tests did not support the contention that *precise control of positioning* is possible.

Maintenance

The following maintenance was performed on the experimental arm during the evaluation:

1. The protective silastic covering of the elbow unit became worn as a result of friction against the end of the upper arm shell. The covering eventually became distorted enough to block the movement of the elbow. The clearance was increased by trimming the cover slightly. Future models can avoid this problem by increasing the tolerance at this point.

2. The movement of the wrist became quite uneven during the initial training period. Inspection revealed a number of metal particles in the ball bearing race which had apparently come from the walls of the race. The wrist operated smoothly after cleaning this area. Use of a better quality metal in the ball bearing containers should avoid rapid wear in future models.

3. Periodically the control cables became difficult to operate and required lubrication. This is a standard maintenance procedure but was hampered by the necessity to remove the forearm from the elbow to separate cable and housing. Future models that permit a simpler means of removal of the cable housing would allow this relatively minor maintenance to be performed at home.

4. Numerous leaks in the CO_2 lines occurred at various points in the testing program. Inspection of the CO_2 fittings revealed that the polyethylene tubing was secured to the fitting only by the snugness of fit of tubing over fitting and by a loop of string around the tubing. Repair of these leaks was simple once the arm was disassembled. However, a more permanent fitting with screw-on retainer, as in the Sierra arm, would be desirable.

5. The hook fingers were somewhat worn when first received. It became necessary to replace these during testing. Such maintenance is usual.

In general, then, the maintenance associated with this test model was relatively minor. The motor units of the prosthesis are of high

quality and if the prosthesis is not subjected to undue strain should provide considerable use before replacement is necessary. If the minor problems experienced by the investigators can be resolved the prosthesis should operate with a minimum of maintenance.

REFERENCES

American Institute for Prosthetic Research: Developer's Claims Regarding the AIPR Pneumatic Prosthesis, undated.

GOTTLIEB, M. S. and J. LYMAN: Evaluation of the Model V Below Elbow Electrical Arm. Memorandum Report No. 14, Department of Engineering, University of California, Los Angeles, California, August 1951.

GROTH, H. and J. LYMAN: Relation of the Mode of Prosthesis Control to Psychomotor Performance of Arm Amputees. J. Appl. Psych., 41:73–78, 1957.

GROTH, H., J. LYMAN, and P. KAISER: Rationale and Methodology for Evaluation of Upper Extremity Prosthetic Systems. Biotechnology Laboratory Technical Note No. 27, Department of Engineering, University of California, Los Angeles, California, March 1963.

KIESSLING, E.: Carbon Dioxide as a Source of External Power for Prosthetic Devices, in the Application of External Power in Prosthetics and Orthotics. Publication 874a, NAS–NRC, Washington, D.C., 1961.

KIESSLING, E.: Pneumatic Prosthetic Components, in The Application of External Power in Prosthetics and Orthotics, Publication 874b, NAS–NRC, Washington, D.C., 1961.

LUCACCINI, L., R. WISSHAUPT, H. GROTH, and J. LYMAN: Evaluation of the Heidelberg Pneumatic Prosthesis. Bulletin of Prosthetics Research, BPR 10–5:58–115, Spring 1966.

SANTSCHI, W. R.: Manual of Upper Extremity Prosthetics, Second Edition. Department of Engineering, University of California, Los Angeles, California, 1958.