POWER UNIT FOR THE UPPER-EXTREMITY AMPUTEE[a]

Edward C. Grahn, B.S.M.E., Project Director

Northwestern University Prosthetic Research Center
401 E. Ohio Street
Chicago, Illinois 60611

Robert G. Thompson, M.D.

Associate Professor, Orthopedic Surgery
Northwestern University Medical School
720 N. Michigan Avenue
Chicago, Illinois 60611

INTRODUCTION

The plight of the above-elbow amputee improved considerably with the advent of the many prosthetic advances made during the period after World War II. Such items as improved harnessing patterns, Bowden cables, Teflon cable housing liners, automatic locking elbows, and plastic sockets of superior fit all have aided in improving the efficiency of above-elbow prostheses. Despite these improvements, however, many amputees with short above-elbow stumps have found it very difficult to use a prosthesis effectively.

One of the early studies by Norman Berger revealed that of 1,630 upper-extremity amputees, 668 were above-elbow cases. Of this group, 61 percent were discovered to be wearing prostheses at the time of the survey, 21 percent had worn prostheses and had abandoned them, and 18 percent had never worn prostheses at any time. Of the group of prosthetic users, 53 percent wore their prostheses full time, 27 percent a moderate amount of time, and 20 percent used their prostheses very little (1).

Brittain, reviewing a series of 54 upper-extremity amputees at all levels, revealed that only 28 were using their prostheses full time at work, 4 occasionally, and 7 were not using them at all. It was also noted that only one of the 6 shoulder-disarticulation amputees was wearing a prosthesis (2).

Gillis, reviewing 1,000 arm amputees at Roehampton, England, indi-

[a] Based on work performed under VA Contract V1005M–1079.

cated that of the patients with above-elbow amputations, 48 percent returned to the same job, 32 percent to better jobs, and 20 percent to poorer jobs (3).

Gordon and Dibble, in 1961, noted that of 25 above-elbow amputees who had been fitted with prostheses, 11 were using them full time and 7 part time. The remaining 7 amputees had discarded their prostheses. Most of the amputees who had discarded their prostheses claimed that it required too much effort to use them. It was the impression of the authors that stump length was not a factor in prosthetic use (4).

McConville and Brittain, in 1963, surveying 50 arm amputees of all levels, revealed that 21 used their prostheses for all activities. They also mentioned that a spring assist unit was being used on all above-elbow amputees (5).

Lambert and Sciora surveyed 182 child amputees of whom 26 were at the above-elbow level. Fourteen of the children wore their prostheses all day, five used them 5 to 8 hours daily, one wore it for 3 to 4 hours, and six children used their prostheses less than 3 hours a day. A close correlation was noted between the time worn and the function obtained. The study also revealed that the above-elbow amputees required the least maintenance of their prostheses, and the conclusion was that minimum repairs indicated less use of the prostheses at this level than at other levels (6).

The authors of this present report have observed many short above-elbow amputees struggling simply to flex an unloaded forearm and terminal device because they did not have sufficient power to flex the prosthetic forearm against gravity. In many cases, the amputee was able to initiate the motion but did not have sufficient strength or power to complete it; and if the hook was loaded, the job became all the more difficult. The fact that nearly all of the observed above-elbow amputees could initiate flexion of the forearm and some opening of the hook, coupled with the observation of the one-finger ease with which an individual can turn the steering wheel of a car equipped with a power steering unit, logically led to the concept of using a power unit to assist amputees with above-elbow, shoulder-disarticulation, and forequarter amputations to operate their prostheses more easily.

PURPOSE

The purpose, as originally conceived by the authors, was to provide the high level upper-extremity amputee with some assist in operating his existing conventional prosthesis. It was believed that the concept of power steering (servomechanism) could be applied. The amputee's excursion and power could be amplified by some external source to a

level sufficient to operate the prosthesis. This would allow amputees with little excursion and/or power to have a fully functional prosthesis.

Some primary considerations were: (a) a compact unit with a minimum of moving parts to simplify maintenance; (b) broad application, i.e., could be used for various upper-extremity prosthetic and orthotic functions; (c) usable on existing prostheses and orthoses with little or no change in harnessing or control pattern; (d) highest possible efficiency; (e) relatively inexpensive to produce.

It was also decided that such a unit should be designed primarily to extend the ranges of motion of amputees not capable of full prosthetic function rather than to increase live lift or pinch force in a prosthesis whose user had full ranges of motion.

DESIGN

Early in the design phase it was decided that a true servomechanism as originally envisioned would not meet some of the design criteria, mainly low unit cost and a minimum of moving parts to simplify maintenance. Instead, a system was designed whereby the amputee would operate his prosthesis to a point where he nearly exhausts his body power, and a preadjusted switch would then start the power unit to continue the operation of the prosthesis. With the standard dual control system, the power unit opens the terminal device or flexes the elbow depending upon whether the elbow is locked. When the amputee relaxes, the cable tension decreases thus opening the switch and removing motor power. With Model I, the weight of the forearm or the tension in the hook bands was sufficient to reverse the motor (without electrical power) to extend the elbow or close the hook. This means that some of the energy put into the system was used to return the system to its starting point with the obvious savings of electrical energy. With Model II, the energy stored in the elastic bands of the hook was sufficient to reverse the motor and close the hook; however,

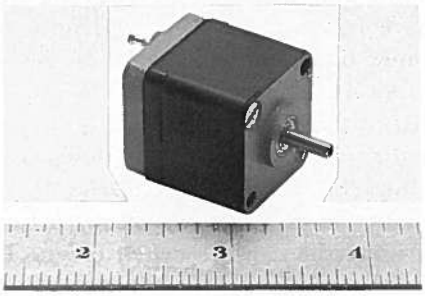

FIGURE 1

the elbow had to be extended by operating a reversing switch connected to the motor. The difference between these two models will be discussed later.

The principal components common to both of the power units are a miniature d.c. torque motor and a high efficiency ball bearing screw. The motor (Fig. 1) was selected for its high torque to weight ratio. The motor specifications, as given by the manufacturer, are listed in Table 1. It must be noted that the 28 volt motor was also operated at 12 volts which changed its characteristics. This will be presented in the Evaluation section of this report.

TABLE 1.—*Specifications of D.C. Torque Motors (7)*

Model	T–0701B	T–0716C
Volts	28.0	12.0
Current, no load	.5 amp.	1.1 amp.
Current, peak torque	1.5 amp.	3.1 amp.
Peak torque	7.0 oz. in.	
Power input at peak torque	40.2 watts	
Friction torque	0.35 oz. in.	
No load speed	5400 r.p.m.	
Weight	2.93 oz.	

The rotary motion of the motor is converted to linear motion using a screw and nut. In Model I the screw/nut is directly coupled to the motor and in Model II it is driven by a belt. The ball bearing screw was chosen because of its mechanical efficiency of over 90 percent when converting torque to thrust (8). This is compared with the efficiency of the Acme screw, a popular type of power screw, which is 40 percent or less (9).

In Model I (Fig. 2 and 3) the drive screw (Fig. 3, No. 7) is mounted to the drive tube assembly (Fig. 3, Nos. 5 and 6) which is directly coupled to the motor and mounted between thrust bearings (Fig. 3, No. 4B) to minimize frictional losses. The length of the bore in the drive tube determines the usable excursion of the screw. This is limited by the space requirements in the arm and the depth to which it can safely be drilled to provide adequate clearance for the drive screw. This restriction is the chief reason for the design of Model II.

The cable adaptor (Fig. 3, No. 13) carries the control cable between the harness and the lift tab. This allows the amputee to operate the arm manually until the control switch closes. This unit may also be operated by directly connecting the cable to the drive screw (Fig. 7, No. 13D), converting the unit to a completely externally powered

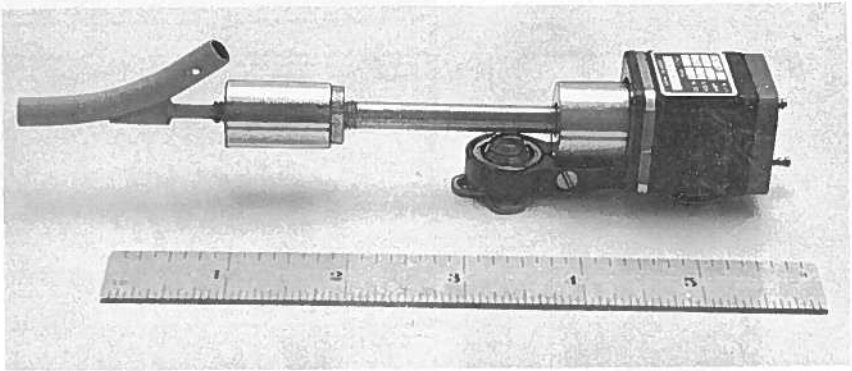

FIGURE 2

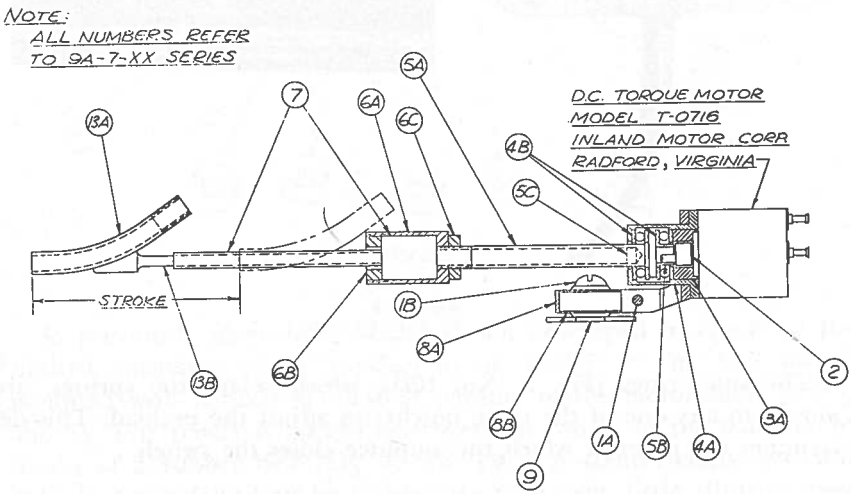

FIGURE 3

system but with loss of feedback to the patient via the control cable. The control switch is shown in Figures 4 and 5.

FIGURE 4

The snap rings (Fig. 5, No. 10D), which retain the springs, are moved to any one of the three notches to adjust the preload. This determines the point at which the amputee closes the switch.

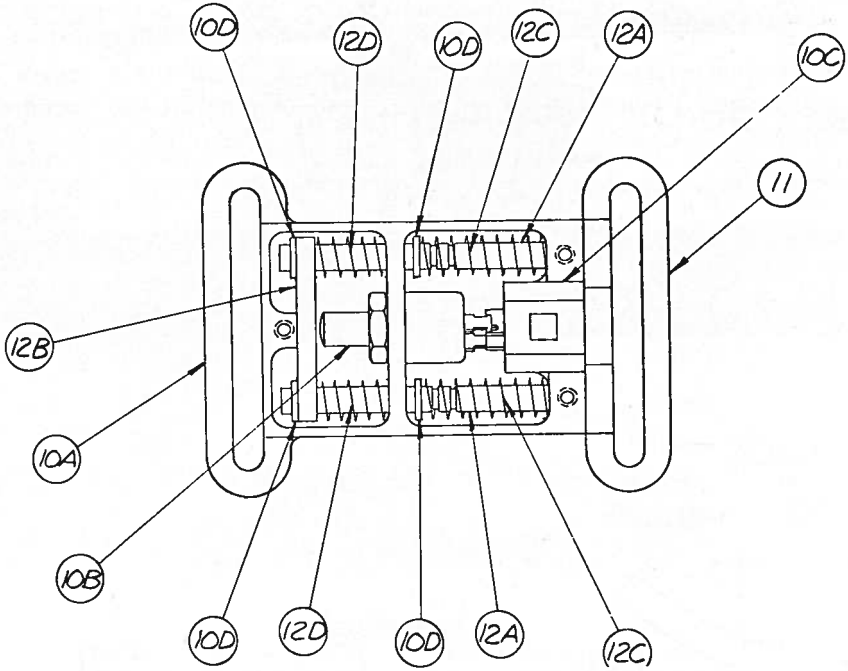

FIGURE 5

As previously mentioned, Model II was developed to eliminate the limited excursion (2 in. maximum) of Model I. The ball nut is mounted with its axis of rotation parallel to the motor shaft (Fig. 6 and 7). The power is transmitted from the motor to the ball nut by means of a rubber belt (Fig. 7, No. 12C). A commercially available "O" ring was found to be satisfactory with very little slippage even at stall. The power screw can be of any length, being limited only by the space available. Again, the cable adaptor carries the cable between the harness and the lift tab. This model may also be used with the cable connected directly to the drive screw (Fig. 7, No. 13D).

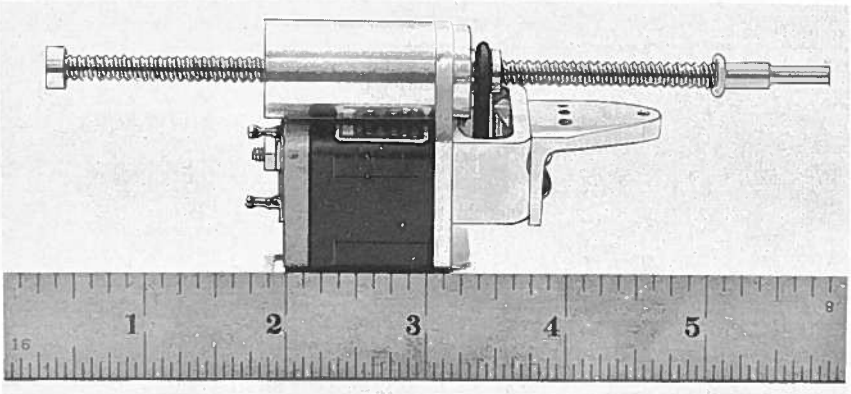

FIGURE 6

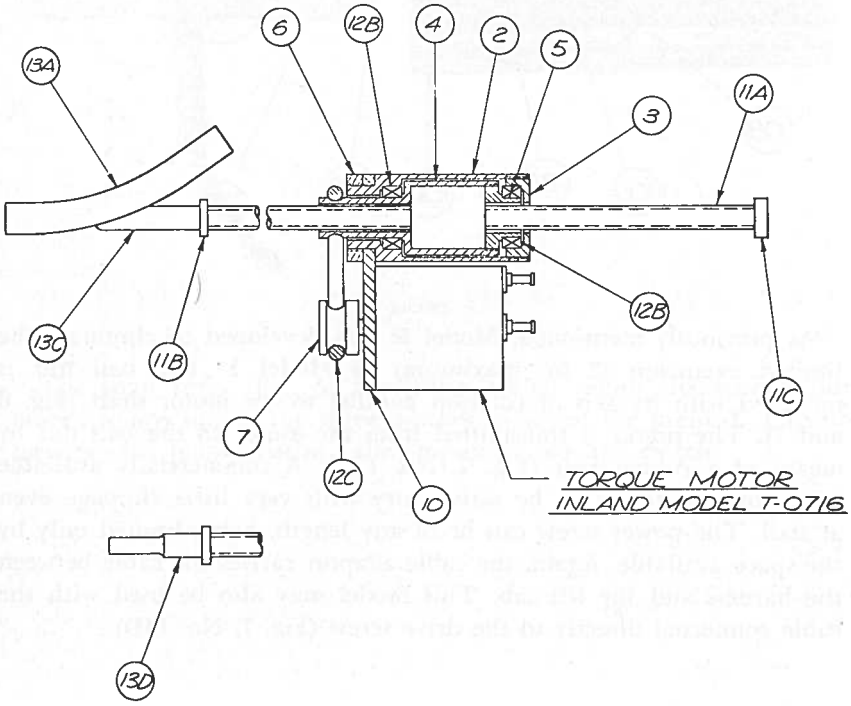

FIGURE 7

The power source is a 12-volt nickel-cadmium rechargeable battery composed of ten "button" cells. Its rated capacity is 500 milliampere hours. One manufacturer claims a life expectancy in excess of 750 complete cycles of charge and discharge (10). Our experience with

these batteries has been a charge/discharge cycle frequency of no more than once per day giving a minimum life expectancy of a little over 2 years.

Figure 8 illustrates Model II with all the necessary components (common to both models). (See Appendix A—Purchased Components.)

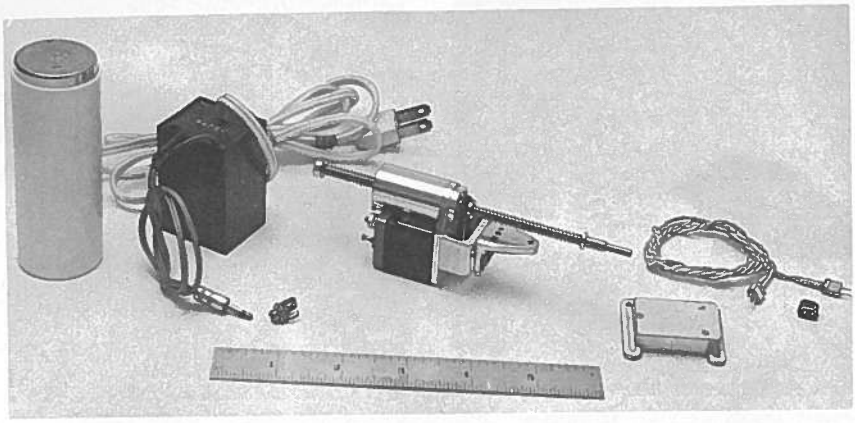

FIGURE 8

PATIENT EVALUATION

Three amputees have been fitted with the power unit: one bilateral left above-elbow and right shoulder disarticulation; one bilateral shoulder disarticulation; one unilateral forequarter amputee.

Amputee No. 1:

M. O. is a 17-year-old female with congenital amputations of left above-elbow and right shoulder disarticulation. She had been fitted at 6 years of age with an above-elbow prosthesis. At age 16 she was fitted on her right side with a shoulder-disarticulation prosthesis with abduction joints and a Robin-Aids hand. Six months later she was seen at this Center as a candidate for the power unit. At that time she had complete prosthetic function of her left prosthesis and could flex her right elbow to 80 deg. but could not operate her terminal device. Both the amputee and her physician felt that she would benefit from a fully functional prosthesis on her right side.

The power unit (Model I, with a 28-volt motor operated at 12 volts) was installed in December, 1965. It was mounted on the interior lateral surface of the humeral section (Fig. 9). The control cable exit is at the distal end of the humeral section where a slot was cut to allow rotation of the elbow on its turntable (Fig. 10). The battery was also

mounted in the humeral section. The jack for recharging it was placed on the proximal lateral aspect (Fig. 9).

FIGURE 9

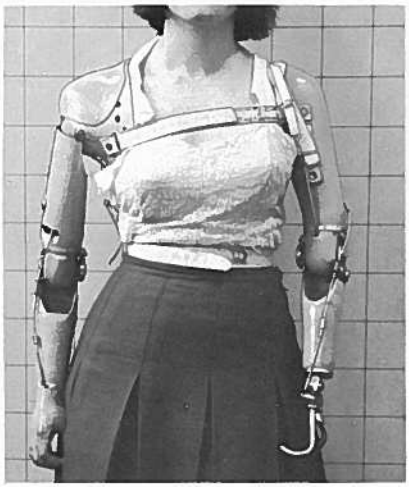

FIGURE 10

The existing harnessing had to be changed slightly to minimize interaction between the two sides (Fig. 11).

The strap for the left elbow lock was previously attached to the strap connected to the posterior-superior aspects of the two sockets. This was extended, as shown in Figure 11, to the inferior aspect of the right socket. This prevented the left elbow lock from cycling during operation of the right side. The other change was to add the strap containing the control switch. The switch was adjusted to start the motor just before the forearm reached 80 deg. of flexion.

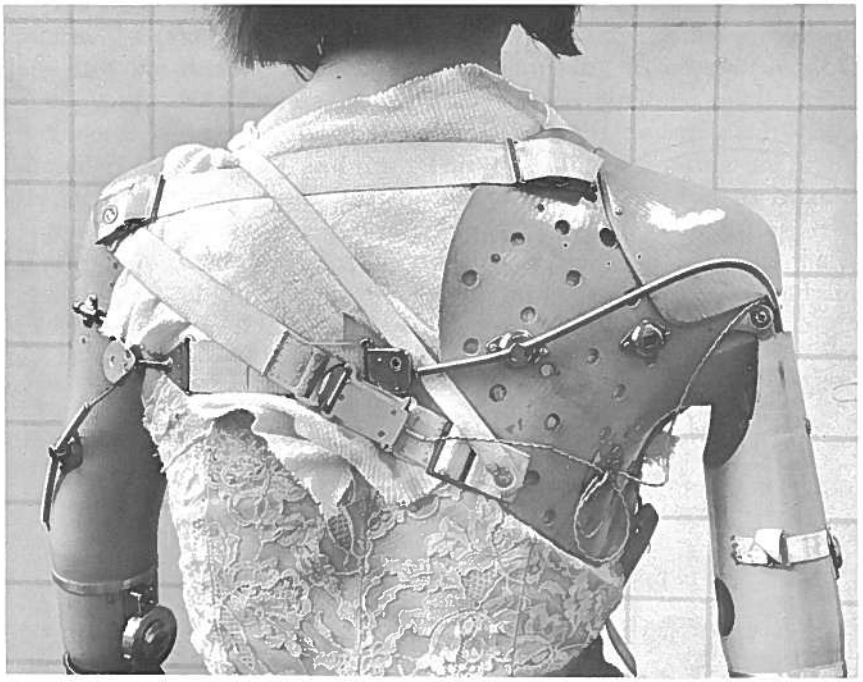

FIGURE 11

The patient now had full function of her right prosthesis. A layout of the components is shown in Figure 12. The components added 16¼ oz. to the weight of the prosthesis. The only maintenance required was daily recharging of the battery and occasional lubrication of the power screw.

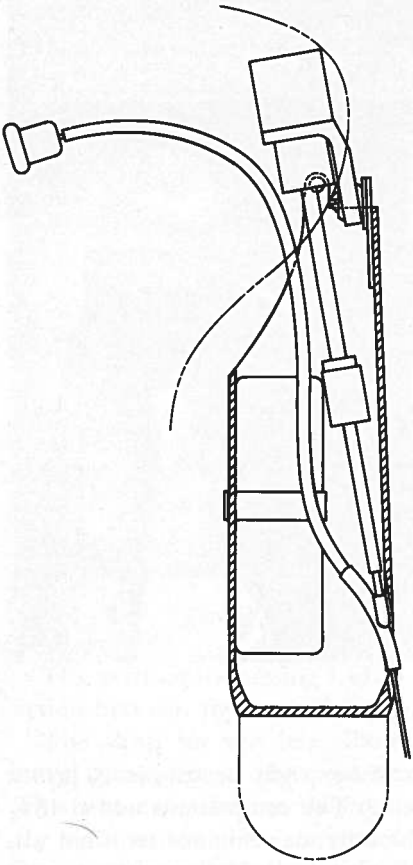

FIGURE 12

After a trial period of 7½ months, the amputee noted that she had less need for a fully functional right prosthesis than she realized and requested that the unit be removed. It should be noted here that she had functioned satisfactorily for 11 years with only the left prosthesis. She felt that the power unit did not offer enough advantages to compensate for the additional weight. Upon examination, the components showed some signs of usage although the amount of usage could not be accurately assessed.

Amputee No. 2:

W. B. is an 11-year-old male with bilateral upper amelia and other multiple congenital anomalies. When first seen this amputee was wearing a right shoulder-disarticulation prosthesis and a left cosmetic arm. The cable for elbow flexion and terminal device operation was con-

nected to a cuff on the opposite (left) thigh. The elbow lock cable was attached to a right thigh cuff. Due to an extensive spinal fusion the amputee was unable to get useful function from his prosthesis.

In April, 1966, a power unit (Model I) was mounted on the right prosthesis. Because of space limitations the unit was mounted on the shoulder cap (Fig. 13 and 14). This necessitated routing the cable through a 180-deg. bend introducing an energy loss due to friction. Figure 13 illustrates the prosthesis in an early stage of fitting. The power unit, wire, and switches were later enclosed in a laminated cover. Areas of the sockets were cut out to reduce weight and improve ventilation (Fig. 14).

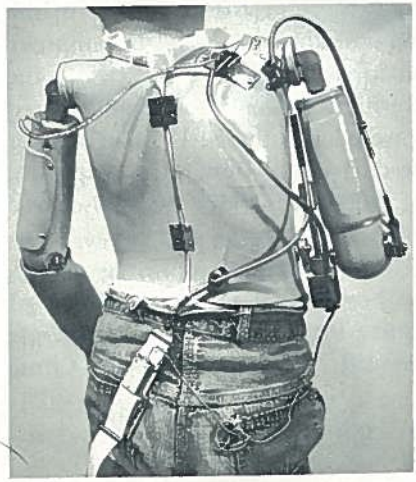

FIGURE 13

FIGURE 14

The first method of controlling the prosthesis was to utilize a switch (Fig. 4) mounted in series with the elbow flexion/terminal device control cable and thigh cuff. The switch was adjusted to allow the amputee to first utilize what body power he had before the power unit started. Because of the added friction in the 180-deg. bend, the weight of the forearm or the elastic bands in the hook would not reverse the motor. A reversing switch was mounted on the posterior aspect of the socket (Fig. 13) which the amputee operated with scapular adduction.

After a brief training period it was apparent that the location of the control switch (elbow/terminal device to thigh cuff cable) made it difficult for the amputee to operate the prosthesis. The control switch was relocated on the anterior-superior aspect of the socket to utilize scapular abduction. Body power was maintained so that the amputee could use both power sources for control of the prosthesis. It was the opinion of the clinic team that the externally powered prosthesis offered a definite advantage over his body-powered prosthesis. He had greater range of elbow flexion and terminal device function. (See Appendix B—Occupational Therapy Report and Appendix C—Discharge Summary.)

After four months the amputee returned to the clinic for a review. The unit was operating satisfactorily; however, it was the opinion of the clinic staff that the amputee was not properly motivated to operate a powered prosthesis and it was removed. (See Appendix D—Clinic Report.)

Amputee No. 3:

W. L. is a 19-year-old male with a left forequarter amputation performed in November, 1965. The amputee was fitted with a conventional prosthesis. With the body-powered prosthesis he had very little excursion which limited elbow flexion to 70 deg. and this was accomplished with extreme effort. A Model II power unit was installed in the humeral section. Due to the amount of effort required to reach the 70 deg. of flexion, it was decided that the unit should be used to externally power the prosthesis rather than serve as a power assist.

Figure 15 illustrates the cable arrangement and the position of the unit.

The battery was installed in the humeral section and the battery charger outlet can be seen on the posterior-superior aspect. The control switch (Fig. 4) was mounted on the posterior chest strap and the elbow lock was mounted on the anterior chest strap. When the control switch was released the hook closed but the forearm would not extend. To correct this a nudge-operated reversing switch was installed. The amputee had some difficulty separating the controls; therefore, the con-

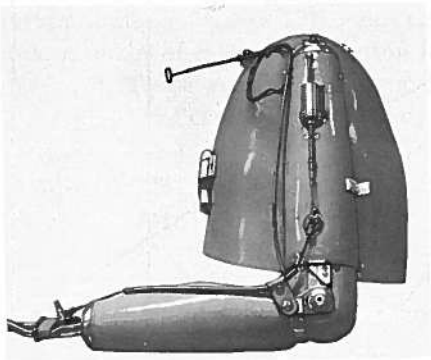

FIGURE 15

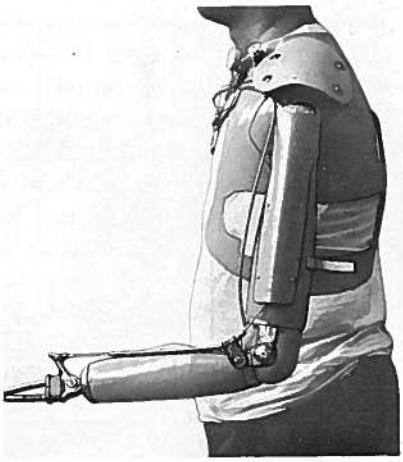

FIGURE 16

trol switch was moved to the anterior chest strap and the elbow lock connected to a standard nudge control. The amputee greatly preferred this to the previous arrangement. Figure 16 illustrates the finished prosthesis delivered in July, 1966.

The amputee has been using the arm daily for 7 months and has had no problems with the power unit. The battery is recharged daily or every second day depending upon usage.

LABORATORY EVALUATION

Both models were bench tested to determine their operational characteristics. Each model was operated by a 28-volt motor and a 12-volt motor for the test. The units were attached to a load by standard 1/16 in. control cable. The load consisted of dead weights added in increments of 8 to 16 oz. until the motor stalled.

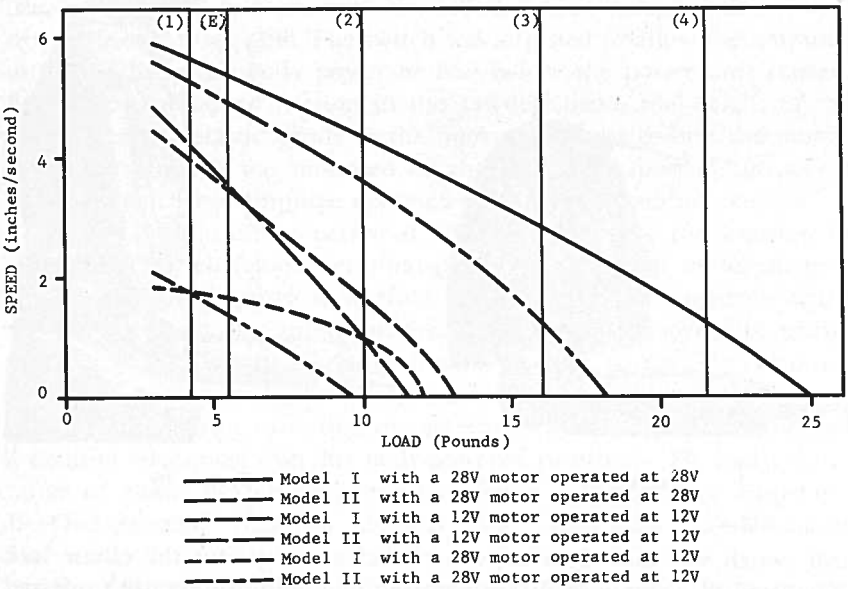

FIGURE 17.—Speed vs. load. Shown are the forces required to open a Dorrance 5XA hook with (1) one band, (2) two bands, (3) three bands, (4) four bands, and (E) the maximum force to flex a 10½-in. forearm.

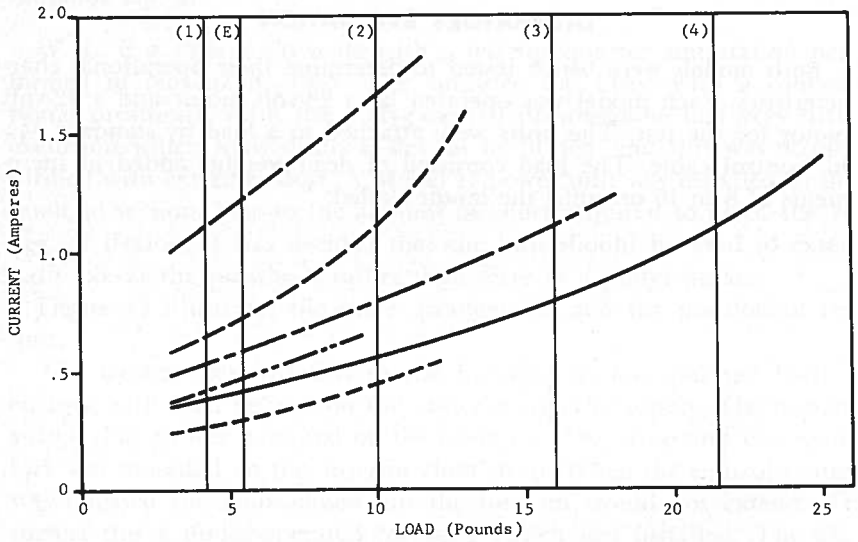

FIGURE 18.—Current vs. load (see Fig. 17 for legend).

Figures 17 and 18 show the results of these tests. Figure 19 is the curve of the available capacity of a 500 milliampere hour nickel-cadmium battery (11). Figure 20 is the projected total hours of operation versus load using the information from Figures 18 and 19. From the information in Figures 17 to 20, Table 2 was constructed showing the total number of cycles of operation for a given function on one recharging cycle. These are the total number of cycles required to discharge the battery to "cut-off" voltage, i.e., the end of useful drain. The unit will continue to operate beyond this point at gradually decreasing speeds; however, this further discharging would decrease the useful life of the battery.

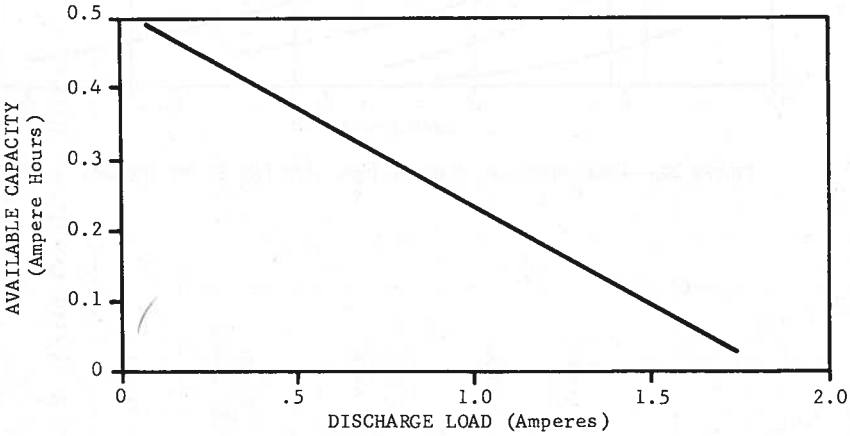

FIGURE 19.—Available capacity vs. discharge load for a 500 milliampere hour capacity nickel-cadmium cell. Total operating time in hours equals the available capacity divided by the discharge load (12).

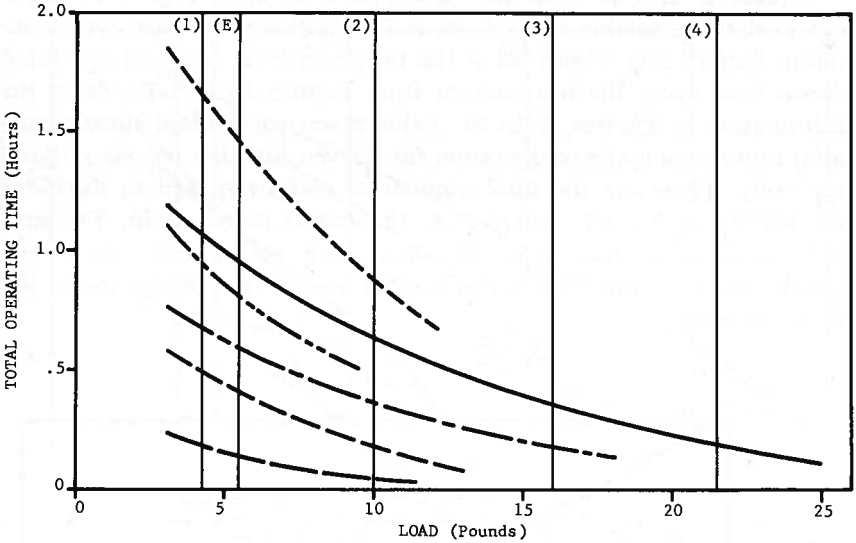

FIGURE 20.—Total operating time vs. load. (See Fig. 17 for legend.)

TABLE 2.—*Cycles Per Battery Recharge*

Function	Model I			Model II		
	28V motor at 28V	28V motor at 12V	12V motor at 12V	28V motor at 28V	28V motor at 12V	12V motor at 12V
Flex elbow to 100° (2″ excursion) [a]	8,320	3,820	1,960	4,530	1,680	560
Flex elbow to 135° (2⅞″ excursion)	—	—	—	3,060	1,140	370
Fully open 5XA hook with 1 band (1 13/16″ excursion)	12,100	5,740	3,840	7,100	3,200	1,490
Fully open 5XA hook with 2 bands (1 13/16″ excursion)	5,450	1,660	584	2,570	—	100
Fully open 5XA hook with 3 bands (1 13/16″ excursion)	2,030	—	—	390	—	—
Fully open 5XA hook with 4 bands (1 13/16″ excursion)	440	—	—	—	—	—

[a] Maximum excursion of Model I.

It must be noted that these figures are for continuous operation. Since the power units will be subjected to intermittent operation, the cycles shown in Table 2 are minimum cycles. Because the battery will "bounce back" or recover slightly between uses, additional cycles can be expected. The figures for elbow flexion take into account the change in force as a function of the angle of flexion.

Shown on each graph are the forces required to open a Dorrance 5XA hook with one, two, three, and four bands (4¼, 10, 16, and 21½ lb. respectively). Measurement was made at the connection to the power unit, just proximal to the lift tab with the prosthesis in the standard checkout position (the hook fingers are pointed medially and the elbow is flexed 90 deg.) (12). Also shown is the maximum force required to flex a 10½-in. forearm with a Dorrance 5XA hook: 5½ lb.

CONCLUSION

Limited experience to date with this device has shown that it does offer assistance to a high level upper-extremity amputee in the operation of his prosthesis, and it appears that complete success depends upon the amputee's motivation and need for such a device. This Center will continue its evaluation of the power unit using other amputees and individuals with upper-extremity orthoses to determine its full usefulness and range of application.

REFERENCES

1. Berger, N.: Studies of the Upper Extremity Amputee (1953–55). Artificial Limbs, V:57–72, Spring 1958.
2. Brittain, P. J.: Upper Extremity Prostheses. How Successful Are They? Am. J. Occup. Therapy, XVII:19–21, January–February 1963.
3. Gillis, L.: Arm Prostheses and Appliances—Their Functional Value in Industry. Annals of Royal College of Surgeons of England, XXVIII:101–121, 1961.
4. Gordon, E. J. and E. Dibble: Do Above-Elbow Amputees Use Their Prostheses? J. International College of Surg., XXXV:506–517, April 1961.
5. McConville, B. E. and P. J. Brittain: Evaluation of the Upper Extremity Prosthesis. Western J. Surg., Obstetrics and Gynecology, LXXI:140–143, 1963.
6. Lambert, C. N. and J. Sciora: A Questionnaire Survey of Juvenile to Young Adult Amputees. J. Bone & Joint Surg., XLI–A:1437, 1959.
7. Inland Motor Corporation, Radford, Virginia, Technical Data Sheet T–0716.
8. Saginaw Steering Gear Division, General Motors Corporation, Saginaw, Michigan. Design Guide, 8th ed., 4, 1964.
9. Ibid., 2.
10. Nicad Battery Division, Gould National Batteries, Inc., St. Paul, Minnesota. Form No. NC1JR, 3.
11. Nicad Battery Division, Gould National Batteries, Inc., St. Paul, Minnesota. Form No. NCB, 7.
12. University of California Los Angeles, Engineering Artificial Limbs Project. Manual of Upper-Extremity Prosthetics (W. R. Santschi, ed.), 217, 1958.

APPENDIX A
PURCHASED COMPONENTS

Component	Manufacturer	Size or manufacturer's part no.
Torque motor	Inland Motor Corporation, Radford, Virginia	T–0716
Ball screw/nut	Beaver Precision Products, Inc., Clawson, Michigan also	B–50 Pitch dia. 3/16" Lead 1/16"
	Saginaw Stering Gear Division, G.M. Corporation, Saginaw, Michigan	5709747
Battery	(Most major battery manufacturers)	12 volt, 500 milliampere hour capacity nickel-cadmium
Battery charger	Electronic Components Corp., Addison, Illinois	10–050
Thrust bearings (Model I only)	Boston Gear Works, Quincy, Massachusetts	A05
Spherical bearing	Fafnir Bearing Company, Britain, Connecticut	BS8ATC21
Radial ball bearing (Model II only)	Reed Instrument Bearing Company, Division of SKF Industries, Inc., Chatsworth, California	SA 2032 2ZE7
Drive belt ("O" ring) (Model II only)	Standard size "O" ring, available from several manufacturers	7/8" OD × 11/16" ID × 3/32" Dia.
Control switch cable	Sonotone Corporation, Elmsford, New York	988:641S (20") 988:641M (30") 988:641L (40")
Jack for control switch cable	Sonotone Corporation, Elmsford, New York	Hearing Aid Jack-Model 200
Battery charger jack	Switchcraft, Inc., Chicago, Illinois	TR–2A
Battery charger plug	Switchcraft, Inc., Chicago, Illinois	Type 880
Switch (for control switch)	Grayhill, Inc., La Grange, Illinois	39–1

APPENDIX B

Mary Free Bed Hospital and Orthopedic Center
Occupational Therapy Department
Grand Rapids, Michigan

William B.....

Report on Experimental Prosthesis (Excerpt)

June 2, 1966

Conclusions:

The most functional elbow position for Bill was at 70 deg. of flexion. At this point complete opening and closing of the hook was achieved and the prosthesis related well to the working surface.

Although the prosthesis was designed to utilize body power initially, supplemented by electric power, Bill chose to use the prosthesis in reverse.

Despite emotional immaturity, ..., and increased weight of the prosthesis, it was the feeling of this therapist that the experimental prosthesis offered Bill advantages over his standard body-powered S/D prosthesis. Its main advantage appeared to be ease of operation and increased TD opening at functional elbow ranges.

APPENDIX C

Mary Free Bed Hospital and Orthopedic Center
Occupational Therapy Department
Grand Rapids, Michigan

William B.....

Discharge Summary

June 2, 1966

Billy was seen in Occupational Therapy for evaluation of and training of an experimental prosthesis. Bill's prosthesis was returned for revisions throughout his hospitalization. Wearing tolerance increased from 15 minutes to 1 hour after which he showed signs of fatigue and excessive perspiration. He was able to learn the controls for terminal device opening and closing, forearm lift, and elbow lock. Occasionally, he had difficulty isolating controls between TD opening and closing or forearm lift and lowering, however, with concentration, this distinction was made. He learned to feed himself with this prosthesis in a manner which was better than the pattern he had achieved with his previous body-powered prosthesis. The prosthesis was used for play activities which involved simple grasp and release and holding type such as use of crayon and pencil. Bill continued to be a severely dependent youngster attaining very little totally independent activity. He was very possessive of the prosthesis and was eager to show it off to his peers.

Although Bill was eager to cooperate, he demonstrated an extremely short attention span and constant need for approval.

At time of discharge, Mr. B..... was given detailed instructions in regard to use, care, and maintenance of this experimental-type prosthesis.

APPENDIX D

State of Michigan Crippled Children Commission
The Area Child Amputee Program
Grand Rapids, Michigan

William B.....
Clinic Report (Excerpt)
September 26, 1966

. . . This boy has not been wearing his bilateral prostheses to any effectual degree. In prolonged discussion with the attendant social worker, we find that the boy has not worn this at home; contrarily he has more or less rejected the bilaterality. He was functioning at an inferior level as far as prehension is concerned and his motivation has dropped considerably. He is under the jurisdiction of a home baby sitter who in all probability does not understand the situation . . .

. . . In school, he has difficulty operating and there is not a full time therapist to supervise his particular situation. This boy has an IQ level of 80, which suggests he is not functioning on an average level for his age despite his superficial conversation proficiency. In discussing this with the team, we feel that in all probability the best move at the present time is to discontinue the powered prosthesis. The recommendations are that the boy remain here for a few days to have the right cap remodeled and converted to a cable-powered mechanism. We will try to cut down the left cap and use it in a small size for suspension only . . .