VA Hospital, Seattle, Washington
Ernest M. Burgess, M.D.

To date some 150 cases have been managed by the Seattle Prosthetics Research group, using immediate postsurgical prosthetics techniques. Considerable efforts have been expended to disseminate the procedures involved to interested clinicians. The three universities offering prosthetics educational programs will offer courses in immediate postsurgical prosthetics during the next academic year. These courses will be limited to physicians and prosthetists, with prerequisite training in lower-extremity prosthetics.

A manual entitled "Immediate Postsurgical Prosthetics in the Management of Lower Extremity Amputees" has been prepared by Dr. Ernest M. Burgess, Mr. Joseph E. Traub, and Mr. A. Bennett Wilson, Jr. and may be purchased from the Government Printing Office. This publication describes surgical and prosthetics procedures used primarily by the Seattle project for the various levels of lower-extremity amputations. Included are special instructions for nursing, ambulation, and training. Sources of supply for necessary components are given.

SENSORY AIDS

Howard Freiberger, A.M.

Electronics Engineer, Research and Development Division
Prosthetic and Sensory Aids Service, Veterans Administration
New York, N.Y. 10001

Fabrication of Obstacle Detectors for the Blind
Bionic Instruments, Inc., Bala Cynwyd, Pennsylvania 19004
Thomas A. Benham, J. Malvern Benjamin, Jr., D. Ridgeley Bolgiano, and E. Donnell Meeks, Jr.

The model C–3 laser typhlocane, Figure 1, mentioned in BPR 10–6 was completed in December 1966 and then demonstrated before several groups interested in mobility for the blind. The reactions to the cane were obtained from knowledgeable people, including blind individuals, at some eight different locations.

Based on experience with the Model C–3 cane, the developers are building a Model C–4 which will embody some new features and redesign of a number of details. Use of magnesium and possibly boron-reinforced plastic laminate should make the weight of the C–4 less than that of the C–3 and well under 2 lb. The center of gravity will be shifted toward the upper end. A joint between upper and lower sections will permit quick-disconnect action yet provide the rigidity

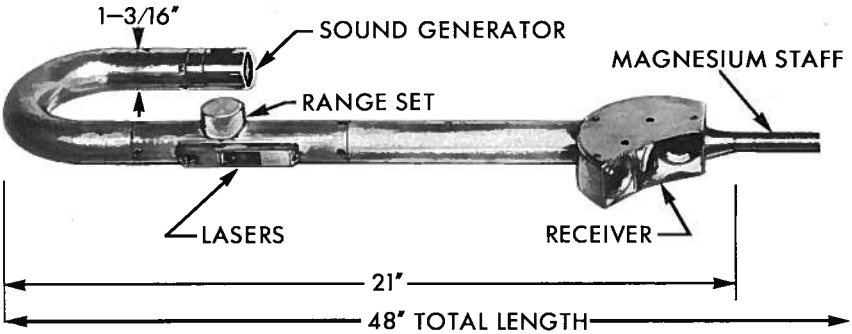

FIGURE 1.—Model C–3 laser typhlocane.

needed when the sections are engaged. The size of the circuit-bearing crook-end will be reduced to minimize the bulky look of the C–3. The "on-off" switch will be repositioned to make its accidental operation unlikely. The operating noise from the energy storage capacitor used for pulsing the lasers will be reduced. The two audio "alarm" signals, the higher pitched to warn of overhanging obstacles and the lower pitched to warn of large drop-offs, will both be reduced in pitch to accommodate persons with high-frequency hearing loss while preserving good pitch separation of the two tones. (A wireless arrangement to present the warning tones through hearing-aid-type glasses may be incorporated in later versions.) "Cross-talk," both optical and electronic, between the three channels will be kept as low as possible to reduce ambiguities in interpretation of signals. A sensitivity control on the drop-off channel will be placed for ease of operation by the user. Means to deactivate the "upward-looking" channel and the straight-ahead channel may be included in the Model C–4 cane primarily for use in training and evaluation periods. The "active zone" out ahead and above the cane in the head and shoulders region (overhanging obstacles) will be brought in closer to the user in the Model C–4 than it was in the C–3. The downward beam "looking" for terrain discontinuities will also be focused on a ground area somewhat closer to the user in the C–4 than in the C–3. The lasers in the C–4 will continue, as in the C–3, to operate with a pulse width of less than 100 nanoseconds, and a pulse repetition rate of 40 pulses per second. A rechargeable nickel-cadmium battery will serve as power source.

During the latter part of January 1967, the C–3 cane was shipped to London for use in a British Broadcasting Company television show, "Tomorrow's World."

Spelled-Speech for Automatic Readers Usable by the Blind
Metfessel Laboratories, Inc., Los Angeles, California 90043
Milton Metfessel, Ph. D., and Constance Lovell, Ph. D.

Professor Metfessel, the principal investigator on this project, is currently engaged in preparing the final technical report on his findings. He has indicated that the report will contain information enabling other workers to produce spelled-speech sound-sets. He plans to supplement the report with tape recordings of some of the sounds he has developed.

Research on Audible Outputs of Reading Machines for the Blind
Haskins Laboratories, Inc., New York, N.Y. 10017
Franklin S. Cooper, Ph. D., and Jane Newman

Work continues at Haskins Laboratories to produce relatively natural-sounding speech by machine. Current emphasis is on a study of those temporal factors in normal speech that must be imposed on word-by-word synthesis to confer naturalness and high intelligibility at normal to rapid reading rates. The staff is also working on equipment and plans for field tests of compiled speech and re-formed speech and is conducting research studies of speech synthesized by rule, with the view that in the long-term this will be the method of choice for the output of large reading machines for the blind.

Information is also being obtained on the stress patterns in spoken English words uttered as elements of natural speech sequences. The difficult problem of the grapheme-phoneme correspondence in English is also under study. A fairly thorough knowledge of this correspondence will be necessary if strings of letters recognized in a character recognition machine are to produce an output of strings of phonemes, i.e., speech, utilizing synthesis by rule or similar speech generating processes.

The projected field tests with compiled and re-formed speech are dependent on equipment developments that are nearly complete. For compiled speech, computer storage and later release of speech waveforms will be used to generate quarter-hour recordings of text from current magazines. The PCM (pulse code modulation) input and output equipment is complete and working; programing for the conversion of input text to output speech recordings is in process. For re-formed speech, the parametric description of spoken words will be stored in the computer and then used on demand to synthesize the successive words of the magazine article. A high performance synthesizer has been built and is in use for the synthesis-by-rule studies. Production of re-formed speech in the required quantities will, however, require compilation of the dictionary of parametric descriptions, which is a

sizable task. Initial field trials will be made with compiled speech which, although inherently less promising than re-formed speech, will serve to evaluate methods and provide useful baseline reactions from blind listeners.

Output Characteristics and Construction of an Interim Word-Reading Machine

Haskins Laboratories, Inc., New York, N.Y. 10017
Franklin S. Cooper, Ph. D., and Paul Brubaker

The work on this project has been completed, and the contractor is currently preparing the final report. On completion of the report this fixed-price contract will be closed.

The Development and Evaluation of a Personal Reading Machine for the Blind

Mauch Laboratories, Inc., Dayton, Ohio 45439
Hans A. Mauch and Glendon C. Smith

A number of the devices in the VA-Mauch Laboratories research program in aids for the blind have been completed for clinical trial since the notes for BPR 10–6 were written. Ten Colineators have been built for use in guiding along lines of print the different optical probe-transducer devices resulting from the work at Mauch Laboratories. Four Visotactor B units have also been finished. These convert from the ink-print characters on an ordinary page to a semi-facsimile tangible replica delivered to four finger tips through the selective patterned vibrations of eight tacticle stimulating pins. Six improved Visotoners, each compactly packaged with a Colineator, batteries, and recharger in an attache carrying case, have also been completed.

One of the prototype devices has been used by Mr. Harvey Lauer, a staff member at VA's Central Rehabilitation Section for Visually Impaired and Blinded Veterans, Hines, Illinois. Mr. Lauer finds this prototype Visotoner an improvement over an earlier model. Demonstration of the Visotoner by Mr. Lauer and playing of a tape recording of a sentence read by the complete recognition machine at a briefing for the House Committee on Veterans Affairs are noted elsewhere.

Current plans for future development of the Visotoner and Visotactor systems for slow, laborious, but independent deciphering of printed or typed materials by the blind and deaf-blind call for the production, for expanded clinical trials, of about 30 second-generation Visotoners and about 10 Visotactors Model B, with associated Colineators, battery chargers, and carrying cases. The unit cost in manufacturing runs of the order of 40–60 complete device packages is estimated at $2,500 at the present time. (Later and presumably more refined devices may

eventually be produced in larger quantities at lower costs.) There is a possibility that responsible agencies other than the development sponsor, the Veterans Administration, may wish to order one or more of these still-experimental devices for local trial purposes from the manufacturer, to be produced concurrently with the forthcoming VA production run, probably in the autumn of 1967. Those interested may request information from:

Chief, Research and Development Division
Prosthetic and Sensory Aids Service
Veterans Administration
252 Seventh Avenue
New York, N.Y. 10001

The electromechanical "Word Synthesizer" described in earlier issues of the Bulletin of Prosthetics Research, designed, built, and patented (U.S. No. 3,175,038 of March 23, 1965) by Mauch Laboratories, has been set aside for the time being to permit trials of a commercially available unit serving somewhat the same functions. In the new unit the recorded letters are all set in equal time "slots," a mechanically convenient but theoretically wasteful arrangement, whereas the older unit had provisions for "variable-length" letters. A Model 632 "Speechmaker," a 31-channel optical sound track rotating-drum-type "audio memory" system, manufactured by Cognitronics Corporation, has been adapted to work in cooperation with an external Word Storage Unit to produce strings of edited Metfessel spelled-speech sounds assembled into "words" after the fashion of the synthesizer first used. Four "repeats" of one particular spelled-speech sound are stored in each of the 31 tracks. Selection arrangements provide for playback of the desired sounds in sequence from the steadily rotating drum.

Recognition Prototype II has been completed and given preliminary trials. It operates well with several type fonts at speeds up to 15 characters per second. It has tolerance for vertical misalignment of the probe ("Visotactor A") relative to the line-of-type approximately twice that of the first model. A blind young lady with some experience with other Mauch reading machines occasionally reached peak reading speeds of 15 to 20 words per minute with Recognition Prototype II after only half an hour of practice with the spelled-speech output. She is currently engaged in a series of weekly sessions with the device to improve both tracking skill with the probe and speed of assimilation of spelled-speech.

Determination of Performance Attainable with the Battelle Optophone

American Center for Research in Blindness and Rehabilitation,
Newton, Massachusetts 02158
Leo H. Riley, M.D., and Ann Harrington

Work with the optophone has not been very successful in a positive way in the Boston area. The contractor is currently preparing a report which will point out the difficulties experienced with the system as applied at ACRIBAR, including change of instructors, problems in recruiting subjects, and illness or other unrelated personal factors hampering training. It is believed that even though results are negative, this report will have constructive value when viewed in the light of the overall optophone program.

Evaluation of Ultrasonic Aid for the Blind

American Center for Research in Blindness and Rehabilitation,
Newton, Massachusetts 02158
Leo H. Riley, M.D.

A major technical report on the work of this project was reported on in the BPR 10–6 Fall 1966 issue of the Bulletin. This report contains the results of the formal, controlled evaluation of the unit conducted by ACRIBAR in 1965–1966.

After the controlled evaluation was completed, several of the units were placed with blind users for a less-formal home-use evaluation. This phase of the work was much less structured by the researchers, and led to many reports from the users, pro and con. Users reported they could do things with the device they could not do before. They could follow the snowbank at the side of a cleared pathway, they could note the dividing line between the gravel of a path and the grass alongside, and they could "recognize" objects in the interior of buildings without touching them. On the negative side of the ledger, some were bothered by the lack of identification provided by a blind-man's cane, particularly when crossing streets. Others found the device's sounds too loud even at minimum setting of the volume control. (This is obviously easy to correct.) Some found the aid fatiguing to the ear, some said their progress with it was slower than with a cane, and one indicated he just could not "press himself to find stepdowns" with the device.

The contractor is assembling these reports of trial users and hopes to prepare a useful summary document based on them.

Development of Test Procedures for Evaluation of Binaural Hearing Aids
Northwestern University, Evanston, Illinois 60201
Raymond Carhart, Ph. D., Tom W. Tillman, Ph.D., and Wayne O. Olsen, Ph. D.

A report by Professors Olsen and Carhart appears elsewhere in this issue of the Bulletin and provides a summary of the work at Northwestern University.

Another source of information on this research is the newly issued "Annual Report of the Auditory Research Laboratories," Northwestern University, Evanston-Chicago, 1965–1966, covering the period September 1, 1965 through August 31, 1966. This report is the first in a series and contains a 48-item bibliographic listing of publications of staff members during the period January 1, 1962 through August 31, 1966. Summaries of many of the listed papers are given. A useful listing of 18 doctoral dissertations is also included.

Electroacoustic Characteristics of Hearing Aids
Houston Speech and Hearing Center, Houston, Texas 77025
James Jerger, Ph. D.

In a feature article in this issue of the Bulletin, Doctor Jerger gives a detailed summary of his research under Veterans Administration contract. He explores the question as to the extent differences in certain physical parameters of hearing aids as measured by electroacoustic instruments are important in terms of the user's performance in speech comprehension with the aid.

The Effects of Distortion on Hearing Aid Performance
Auditory Research Laboratory, VA Hospital, Washington, D.C. 20422
Roger N. Kasten, Ph. D., and Stephen H. Lotterman, Ph. D.

A full-length article by Dr. Kasten and Dr. Lotterman appearing in this issue of the Bulletin covers one aspect of the work completed at the Auditory Research Laboratory. Studies on the effects of total nonlinear distortion in hearing aids have been completed, the results verifying that speech-perception performance with speech heard through an aid is inversely proportional to total nonlinear distortion. Current work includes an examination of the influences of intermodulation distortion on perception of hearing-aid processed speech.

Dr. Kasten plans to accept a new position July 1, 1967, with the Department of Audiology and Speech Science at Purdue University. His successor at the VA Hospital, Washington, D.C., will be Dr. George Simon who will be transferring from his position as Audiology Clinic Chief, VA Hospital, Denver, Colorado.