A NEW METHOD FOR THE MEASUREMENT OF NONLINEAR DISTORTION USING A RANDOM NOISE TEST SIGNAL [a]

Edwin D. Burnett. B.A.

Physicist, Institute of Basic Standards
National Bureau of Standards
U.S. Department of Commerce
Washington, D.C. 20234

ABSTRACT

A method is presented for measuring the nonlinear distortion produced by a hearing aid with a wide-band random noise input signal. This method will more nearly represent the distortion of a hearing aid under conditions of actual use than do sinusoidal test methods. The limitations of conventional test procedures are discussed briefly. The correlation coefficient between the results of the random noise test and the results of harmonic distortion testing is calculated as 0.43 for a large group of hearing aids.

INTRODUCTION

The purpose of this paper is to discuss a method of measuring the nonlinear distortion of a hearing aid, using wide-band random noise as the test signal. Nonlinear distortion is the production of frequency components in the output signal which are not present in the input and which are associated with nonlinearity of the transfer (output level versus input level) curve. It should be kept in mind that there is no such thing as "the" nonlinear distortion of a device such as a hearing aid. Rather, there is "a" measured distortion which is dependent upon the nature of the test signal as well as upon the characteristics of the device being tested. The nonlinear distortion which occurs when a speech signal is presented to a hearing aid is of primary interest, of course, and the test signal should be one which will be distorted in a similar way. Some reasons will be given for considering the conventional test methods to be inadequate in this respect, thus making desirable the development of a better test procedure. No attempt will

[a] Based on work performed for the Veterans Administration.

be made in this paper to evaluate quantitatively the effects of the measured distortions upon the perception of speech or other signals. The use of the premise that the "undesirability" of distortion is a monotonic function of distortion, increasing as distortion increases, should be clear, however.

Although the instrumentation was developed specifically for hearing aids with their limited frequency response and relatively high distortion, the concepts have general applicability for distortion measurements in communication systems.

I. CONVENTIONAL MEASUREMENT METHODS

The usual measurement of nonlinearity made on a hearing aid is the simple one of measuring the harmonics in the output for sinusoidal inputs at 500, 700, and 900 Hz (1). The r.m.s. level of the harmonics is divided by the r.m.s. level of the total signal (or the r.m.s. level of the fundamental component only) and the resultant number is called the harmonic distortion. This harmonic distortion is one type of nonlinear distortion and is the only type which occurs when the input consists of a single frequency. This test has two large virtues: it is an easy one to make and, for that reason, has been standardized. If one makes harmonic distortion measurements at higher frequencies it is noted that when the input frequency is above the region of 1500 to 2000 Hz the harmonic distortion in the output virtually disappears. The harmonics may be produced in the amplifier but are not passed by the earphone which cuts off sharply around 3000 or 4000 Hz. Actually, the high frequency region is often the one in which the distortion is the greatest. This is because most hearing aids have a rising slope to the response versus frequency curve, which gives a higher output sound pressure level at higher frequencies [a]. This situation is made worse by the fact that many earphones fall off somewhat in response above the first resonance at about 1500 Hz. This requires an additional boost in response in the amplifier or microphone at high frequencies. The resultant signal can cause distortion or even saturation of the final amplifier stage and/or earphone for rather low-amplitude high-frequency signals.

This distortion increase at high frequencies would not matter if the harmonic distortion—which is filtered out—were the most important nonlinear product, but this is not the case. When a complex signal is subjected to a nonlinear operation, the harmonic components produced are small in amplitude compared to the intermodulation products (2). These latter are products of the form ($N_aF_p \pm N_bF_q \pm$

[a] This is true for constant sound pressure versus frequency inputs. The situation is modified somewhat for a signal such a speech. See Sec. IV.

$N_cF_r \cdots\cdots$), where $F_{p,q,r}$ are input frequencies. The values of the integers N_i and the number of terms in the series depend upon the nature of the nonlinearity.

The significance of harmonic distortion, then, depends upon its value in predicting the amplitude of intermodulation distortion. This type of prediction can be made readily only for very simple types of systems which have flat frequency responses and which produce equal distortions for all input frequencies. These restraints are such that one could use harmonic distortion, cautiously, on such devices as high fidelity amplifiers as a figure of merit, but on a hearing aid such a use can be most misleading.

Using two frequencies at a time in an intermodulation test is rather routine in measurements on many acoustical devices, but seems to have been done very little in hearing aid evaluation (3). The SMPTE test (4), with one high and one low frequency, is not appropriate for hearing aids. Even if the usual frequencies of 60 and 3000 Hz are changed to, say, 400 and 3000 Hz, the results are too dependent upon the gain at the particular frequencies used. The CCIF test (5), with two frequencies, F_1 and F_2, close together, which are scanned through the frequency range, has some usefulness, especially in determining distortion as a function of frequency. Usually, the only measurement made with this test is the amplitude of the second order component which falls at the fixed frequency F_2–F_1. For many hearing aids other components must be measured in order to obtain a more complete picture of the distortion. Third and higher odd-order components will predominate in push-pull instruments. A tracking filter is necessary to measure such components, which are not fixed in frequency. This measurement is possible, of course, and has been done in this laboratory using a heterodyning technique to track these frequencies. Figure 1 gives the results on a hearing aid for this test, showing a second, a third, and a fifth order component at the frequencies, F_2–F_1, $2F_1$–F_2, and $3F_1$–$2F_2$, respectively. For our purpose, a basic problem with the test is that there are too many parameters, both in the input and output signals, to allow ready intercomparison of hearing aids. Also this test will still not directly measure the amount of distortion which occurs with complex signals. With such signals, the highest amplitude distortion components are not of the form $N_1F_2 \pm N_2F_1$ but are of the form $F_1 \pm F_2 \pm F_3 \pm \cdots\cdots$, with as many terms in the expression as the number of the order of the distortion which is involved (2). No test can be made with a two frequency input which will measure these components, unless the distortion is entirely second order. However, there is considerable information given by this test about individual hearing aids if one wishes to run the several curves required.

II. RANDOM NOISE TESTING

An attractive alternative to scanning the input frequencies is to use a random noise signal so that all possible combinations of input frequencies are formed, more or less simultaneously. This signal over-

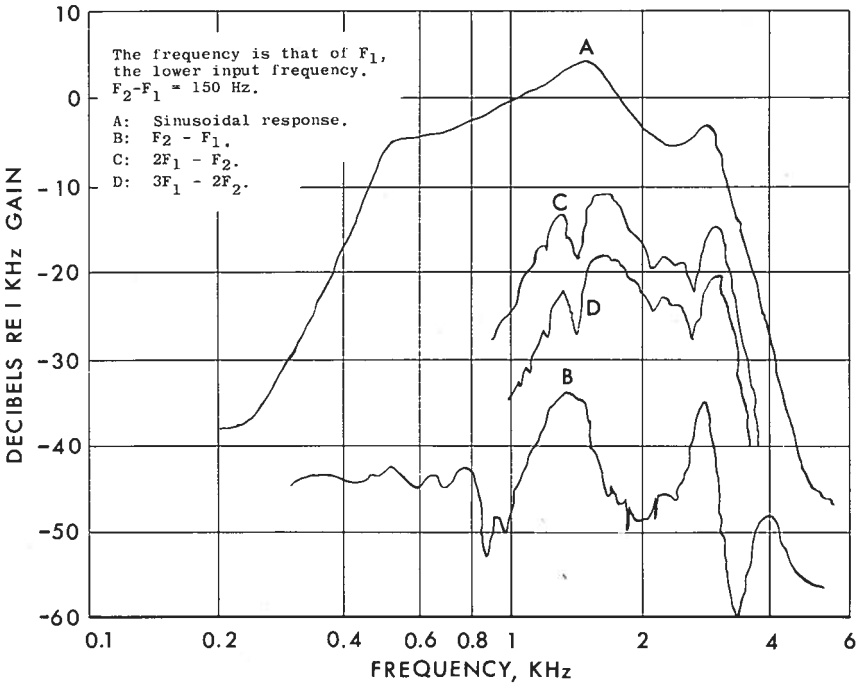

FIGURE 1.—CCIF distortion measurement on a hearing aid.

shoots the desired condition, in that more frequencies are present at one time than exist in a speech signal. The distortion produced by a nonlinear system with a speech signal approaches the distortion produced with a noise signal rather closely, at least for lower orders of distortion (2). Also, there will generally be some noise in the listening environment, which will make the signal more complex. In addition, the Gaussian distribution of the amplitudes of the random noise signal is a reasonable approximation for our purposes of the amplitude distribution of speech (6).

A set of data which shows the equivalency of the distortion produced by random noise and by speech was taken by the following method:

Distortion was artificially produced by feeding a sinusoidal signal through a circuit whose output was the instantaneous square of the input. The gain was so adjusted that the AC component of the output was the same level as the input. This AC component is the second harmonic of the input. The sinusoid was removed and a Gaussian signal, of the same r.m.s. amplitude as the sinusoid, was applied. The r.m.s. amplitude of the output of the square law device was 6 dB greater than it was for the sinusoid. This is in agreement with theory (2). Then a speech signal was applied to the input. The outputs obtained for five different speakers are shown in Table 1. Note that the average output for the five speakers is 0.6 dB higher than the output for the noise signal. Thus, for second order distortion it is confirmed that the distortion level produced for a noise signal is very similar to that for a speech signal, although there can be some differences in the amplitude versus frequency distribution. For higher orders of distortion, the results will be similar, with any differences between the noise and speech distortion amplitudes becoming somewhat greater as the distortion order increases.

TABLE 1.—*Distortion Level for Five Speakers*

Speaker	Output level (dB re input level)	Speaker	Output level (dB re input level)
A	9.2	D	5.5
B	5.6	E	8.2
C	4.7		
		Average	6.6

III. TEST PROCEDURE

The basic method for the random noise test is to use a signal which has a hole in its spectrum at some frequency. This hole is partially filled in by nonlinear products produced in the hearing aid; the degree of filling in is used as a measure of the distortion. This type of test with a fixed hole frequency has been used routinely for RF distortion testing on radio receivers and by at least one experimenter on hearing aids (7). It is possible to perform a more complete test by scanning the hole frequency and the detector frequency so that distortion is obtained as a function of output frequency; this is the nature of our test. A convenient and stable way of doing this is described below. The

block diagram is shown in Figure 2 and details of the design are shown in Figures 3, 4, and 5.

The method of producing the test signal is first described. A white noise signal is filtered to have a spectrum from 150 Hz to 5000 Hz.

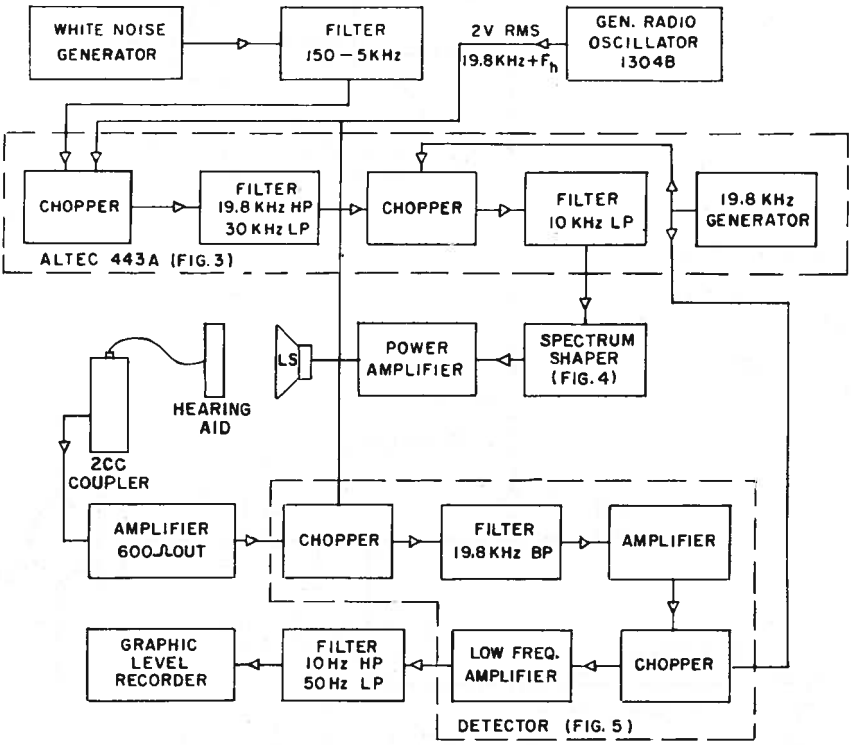

FIGURE 2.—Block diagram of distortion test signal generation and detection.

The filter used should be down at least 40 dB at 100 Hz and at 10kHz. This noise is chopped, i.e., turned on and off, at a rate of 19.8 kHz$+F_h$ (F_h=center frequency of hole). This gives a spectrum of

$$19.8\times10^3+F_h\pm(150\rightarrow5000)\text{Hz}$$

considering only first order sidebands (Fig. 6, upper). This signal is low-pass filtered at 30 kHz to remove higher order components, sharply high-pass filtered at 19.8 kHz, and chopped again at a rate of 19.8 kHz. This gives rise to a signal whose first-order difference-frequency sideband consists of

$$(0\rightarrow(F_h-150) \text{ and } (F_h+150)\rightarrow(F_h+5000)\text{Hz}$$

which is the desired test signal with a hole 300 Hz wide. This spectrum

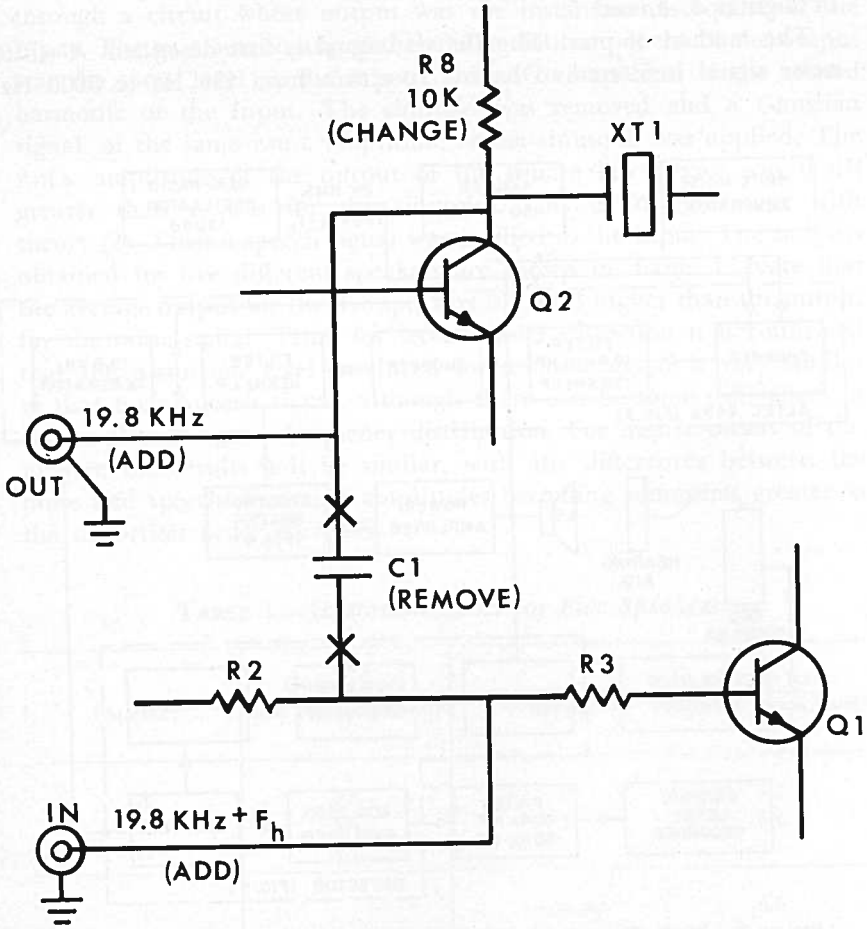

FIGURE 3.—Modifications on Altec 443A feedback suppressor.

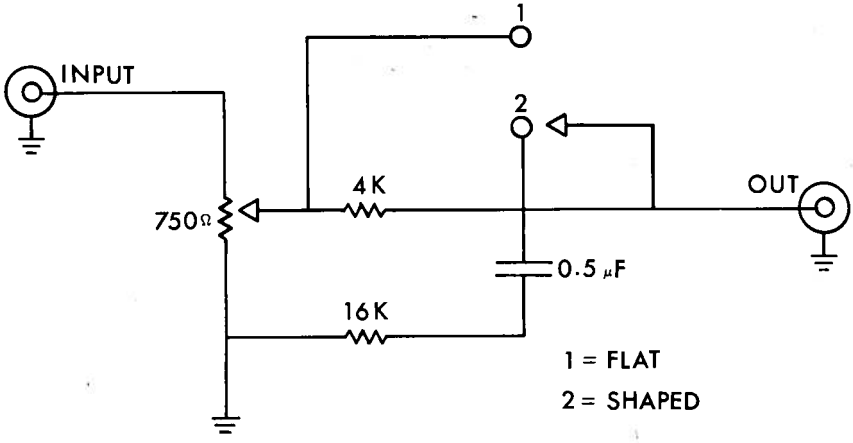

FIGURE 4.—Level control and spectrum shaper.

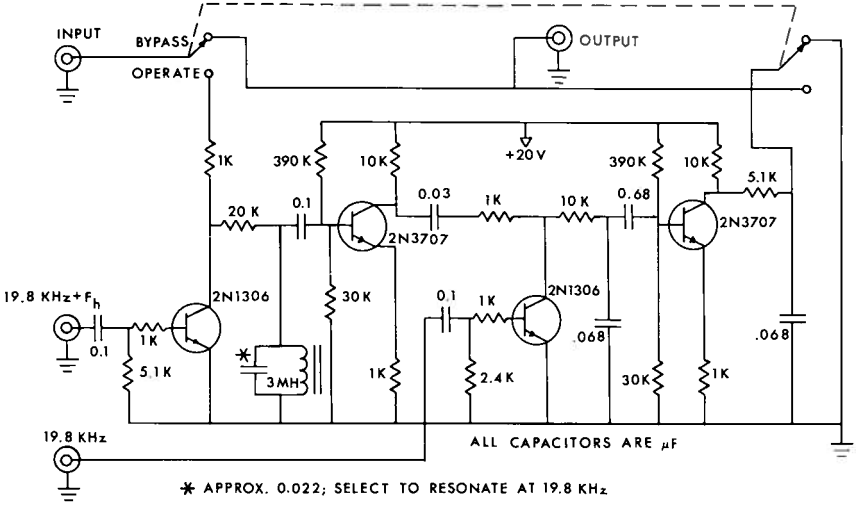

FIGURE 5.—Distortion detector.

is shown in Figure 6, lower. The upper cutoff frequency is not constant, but since it is always 5 kHz or higher, this is not important for hearing aid testing. Other components produced by the chopping are at higher frequencies and are removed by a 10 kHz low-pass filter.

The purpose of the 19.8 kHz high-pass filtering is to remove components which would form negative frequencies after chopping. These would fold back into the spectrum and fill in the hole. The character-

istics of this filter largely determine the hole depth which can be achieved. If the lowest hole frequency to be used is 300 Hz, then the filter must be down the desired hole depth at 19.5 kHz.

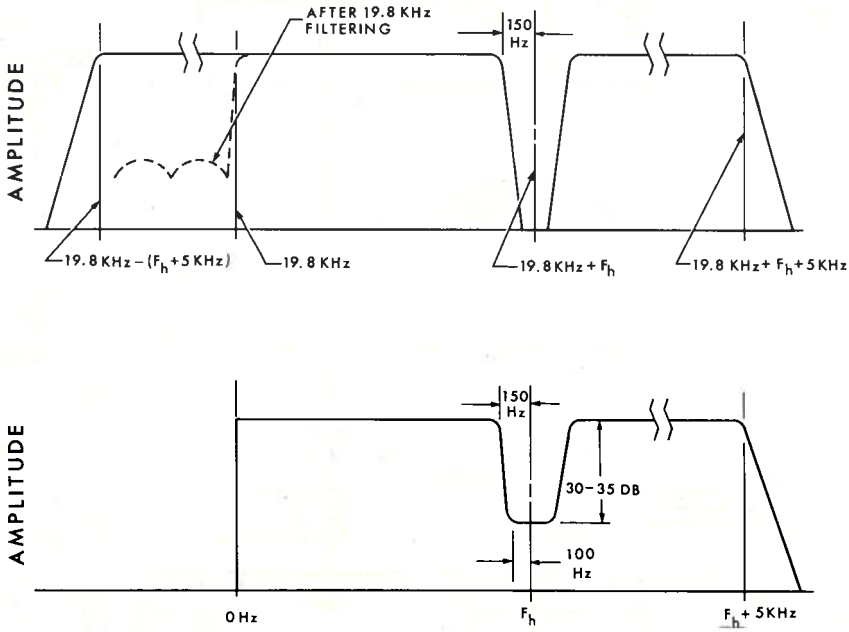

FIGURE 6.—Upper: signal spectrum after chopping at 19.8 kHz rate. Lower: final test signal.

A feedback suppressor of the type normally used to produce a 5 Hz frequency shift to raise the threshold of instability in sound reenforcement systems (8) can be used to perform many of the necessary functions. The 19.8 kHz, 30 kHz, and 10 kHz filters, the 19.8 kHz oscillator, and the choppers are in this unit. The only modifications necessary are to feed an external frequency of 19.8 kHz+F_h into the first chopper in place of the signal from the first internal multivibrator, and to feed out the nominally 19.8 kHz signal from this multivibrator for detection purposes. The modifications for an Altec-Lansing 443A are shown in Figure 3. Units of other manufacturers could be used with possible minor changes in the modifications. The frequency of the second internal multivibrator is the 19.8 kHz signal referred to in this discussion and the actual frequency of the unit used should be substituted in future references to this frequency. The frequency of the first internal multivibrator should be tuned to be about 2 Hz less than this fre-

quency to prevent beat phenomena which would occur in detection if its frequency were exactly the same.

The external oscillator used for developing the frequency of 19.8 kHz $+F_h$ is a General Radio 1304B. This is a beat frequency type, with a logarithmic scale from 20 to 20,000 Hz, and a second range whose frequencies are normally those of the first range plus 20 kHz. For this use the second range is slightly detuned internally so that the output frequency is the dial reading plus 19.8 kHz. The dial reading then indicates the frequency of the center of the hole. This is particularly convenient because this oscillator can be linked to a graphic level recorder whose frequency scale matches the dial readings.

The detector on the hearing aid output also uses chopping for its operation (Fig. 5). The hearing aid output is chopped at a rate of 19.8 kHz$+F_h$. This shifts the hole to frequency of (19.8 kHz$+F_h$) $-F_h=$ 19.8 kHz. This signal is passed through a 19.8 kHz resonant circuit to remove other sidebands. It is then rechopped at a rate of 19.8 kHz. This moves the hole to the region of -150 Hz$\rightarrow 0 \rightarrow +150$ Hz. There will be an undesired component near 0 Hz unless the carrier frequency in the first chopper in the feedback suppressor is well suppressed. This component will actually be at 2 Hz when the hole frequency is stationary, because of the deliberate 2 Hz offset in the detection frequency. When the hole frequency is scanned, this frequency will vary from 2 Hz downward to DC at the scanning rates used (56 seconds from 200 Hz to 5000 Hz) because of the time delay (3 msec.) between the loudspeaker and the hearing aid. A 10 Hz high-pass filter is used to remove this component. This can be a simple 6 dB/oct RC filter. A 50 Hz low-pass filter which is 40 dB down at 100 Hz is also used so that only frequencies within the hole are recorded. These filters are placed between the final chopper and the level recorder.

This system then gives a recording of hole depth as a function of frequency. A recording of the response of the hearing aid to a signal with no hole in its spectrum can be made by switching the feedback suppressor to the "out" position. This passes the original 150$\rightarrow$5000 Hz signal to the hearing aid. The detection system then measures the total output of the hearing aid as a function of frequency. The spacing between this curve and the distortion curve is used as a measure of distortion.

IV. SPECTRUM SHAPING

Some shaping of the spectrum before it is presented to the hearing aid will generally be desirable. It is beyond the scope of this report to determine definitively the optimum shape to use for this purpose, but

some preliminary considerations will be given. One should not fall into the seductive trap of shaping the spectrum to resemble the long time average power spectrum of speech. This rolls off a substantial amount at high frequencies because of the short time duration of many consonant sounds. The peak spectrum of speech—say the level as a function of frequency which the speech exceeds 1 percent of the time—will more nearly represent the desired spectrum. The 1 percent spectrum given by Fletcher (9) can be roughly approximated by a 3 dB/oct slope above 500 Hz up to 5000 Hz, with the 3 dB point at about 900 Hz. This curve was measured with constant percentage bandwidth filters. Unfortunately, it cannot be converted to a curve showing energy per unit cycle by the simple addition of a 3 dB/oct downward tilt because the energy measured in a given band may occupy only a portion of that band at any time. Lacking definitive information as to the peak power of speech on a constant bandwidth basis, the best modification that can be made on white noise to match that spectrum seems to be to use a curve falling somewhere between a 3 dB/oct slope with the 3 dB point at 900 Hz, and a response with an additional 3 dB/oct slope. For the testing reported in this paper, the first extreme was arbitrarily used. The circuit of Figure 4 gives the desired curve up to 5000 Hz. For later work the 16K ohm resistor was shorted out so that the circuit could be defined by a single time constant. The difference is 3 dB at 4000 Hz, and the effect on the measured distortion proved to be negligible.

V. TEST RESULTS

Seventy-four instruments were tested using the method described above. In each case the gain setting was that for which the r.m.s. harmonic distortion did not exceed 10 percent at any frequency with an input sound pressure level of 62.5 dB. It should not be understood that this is considered a particularly good volume control setting to use for this test. Rather, it was desired to compare the data obtained with this test with data obtained at this control setting in the routine testing which was done on the same aids. For this test an input sound pressure level of 70 dB was used. This is somewhat higher than the level of conversational speech, but input pressures of this level will often be encountered, and it was desired to see the performance at this level.

The graphs obtained for four different aids are shown in Figures 7 and 8. Hearing aids A and B are body worn instruments, and C and D are over-the-ear instruments. The upper curve for each aid is the total response, and the lower curve the distortion response. Aid B has a gain at 1 kHz which is 4 dB less than the gain of aid A; its maximum

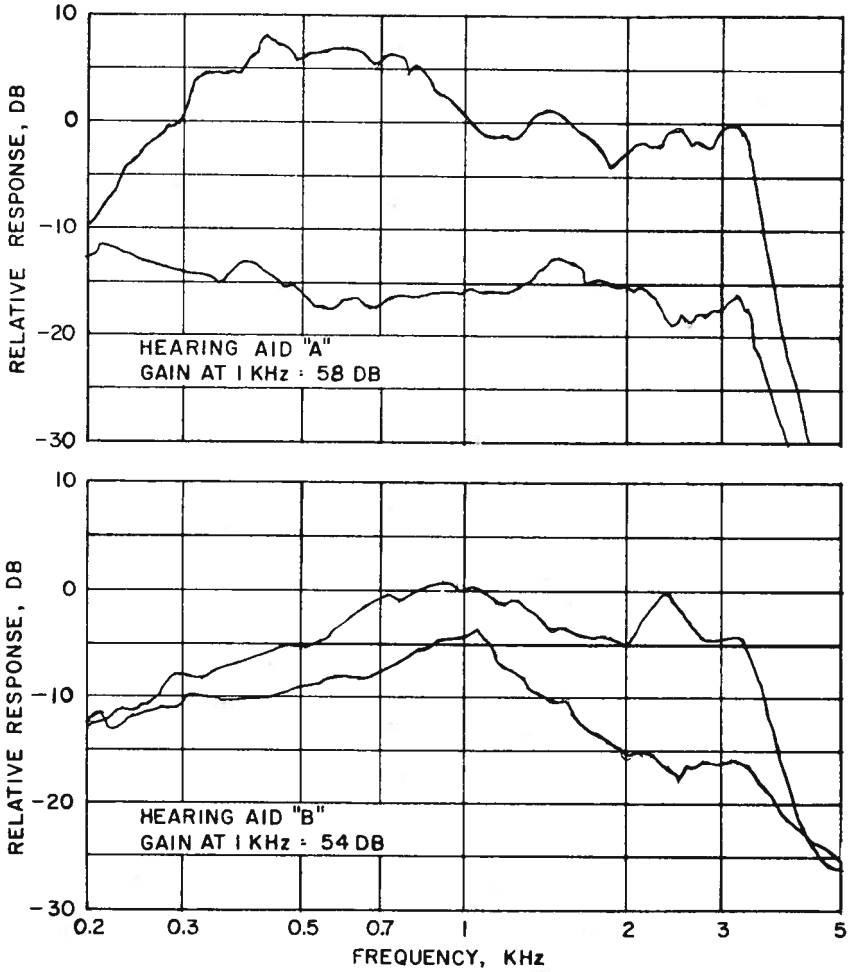

FIGURE 7.—Noise and distortion responses for hearing aids A and B.

power output is also 4 dB less. It follows that instrument B could have as low a distortion as does aid A. It clearly does not. The average distortion, as defined below, of aid B is down 7 dB. That of aid A is down 17 dB. Hearing aids C and D are instruments whose gains, fre-

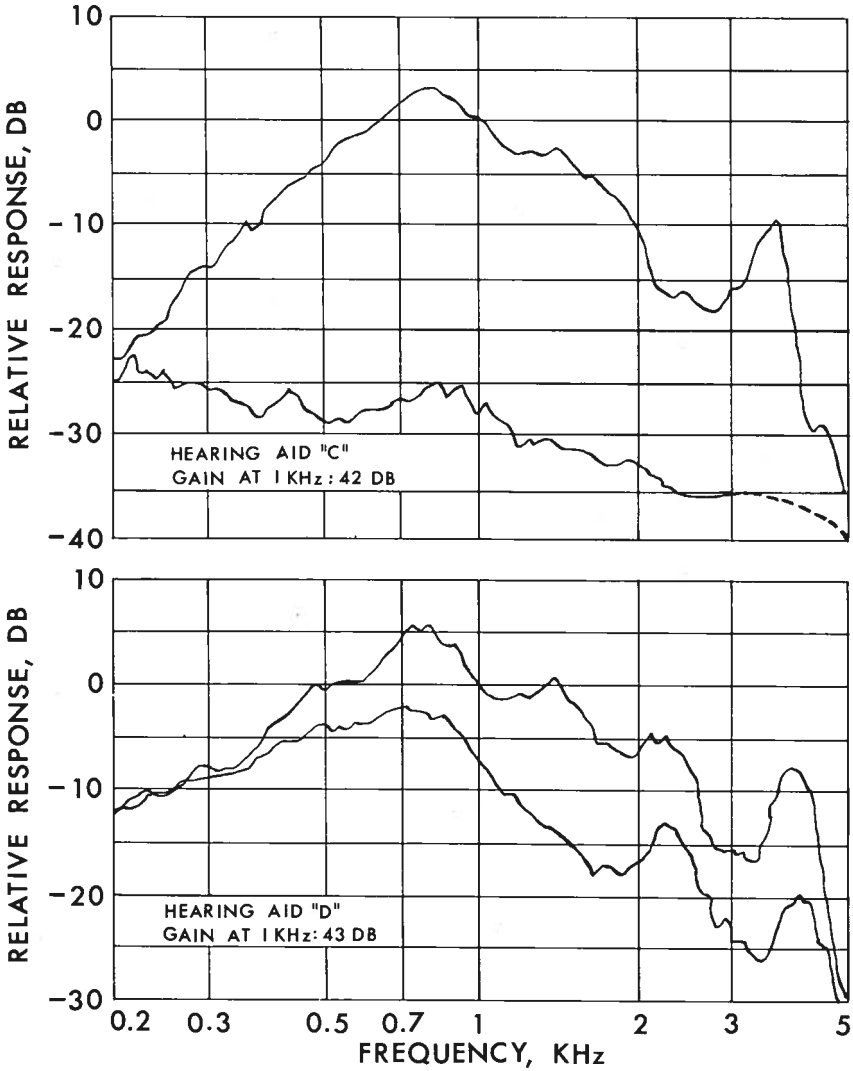

FIGURE 8.—Noise and distortion responses for hearing aids C and D.

quency response curves, maximum power outputs, and harmonic distortions, are closely matched. The complex signal distortions are very different, as the graphs show. The average distortion of aid D is down 8.5 dB and that of C is down 26 dB.

The upper noise response curve has a close, though not always predictable, relationship to the sinusoidal response curve for the same instrument. If the hearing aid is not being saturated, adding a 3 dB/oct upward slope above 900 Hz to the upper curve will give an approximation to the sinusoidal response curve. For comparison the sinusoidal responses of the four hearing aids are shown in Figures 10 and 11.

At low frequencies, the output of the hearing aid may be largely

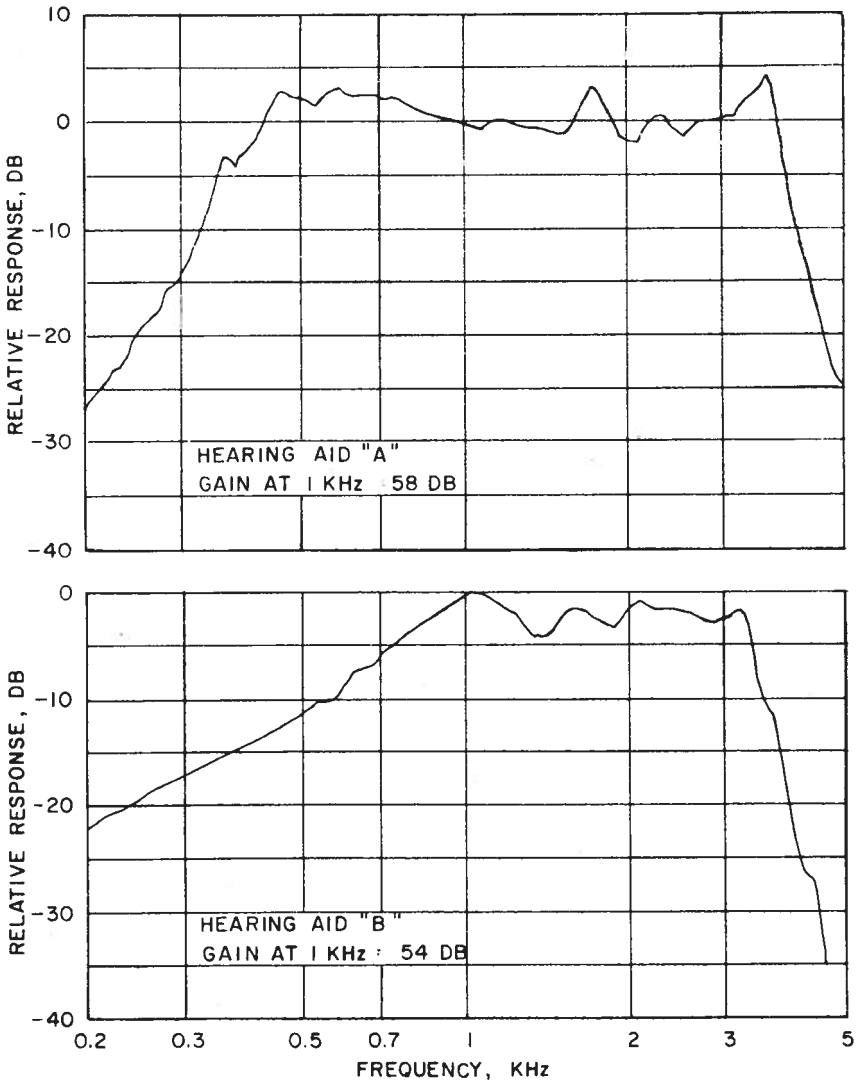

FIGURE 9.—Sinusoidal response for hearing aids A and B.

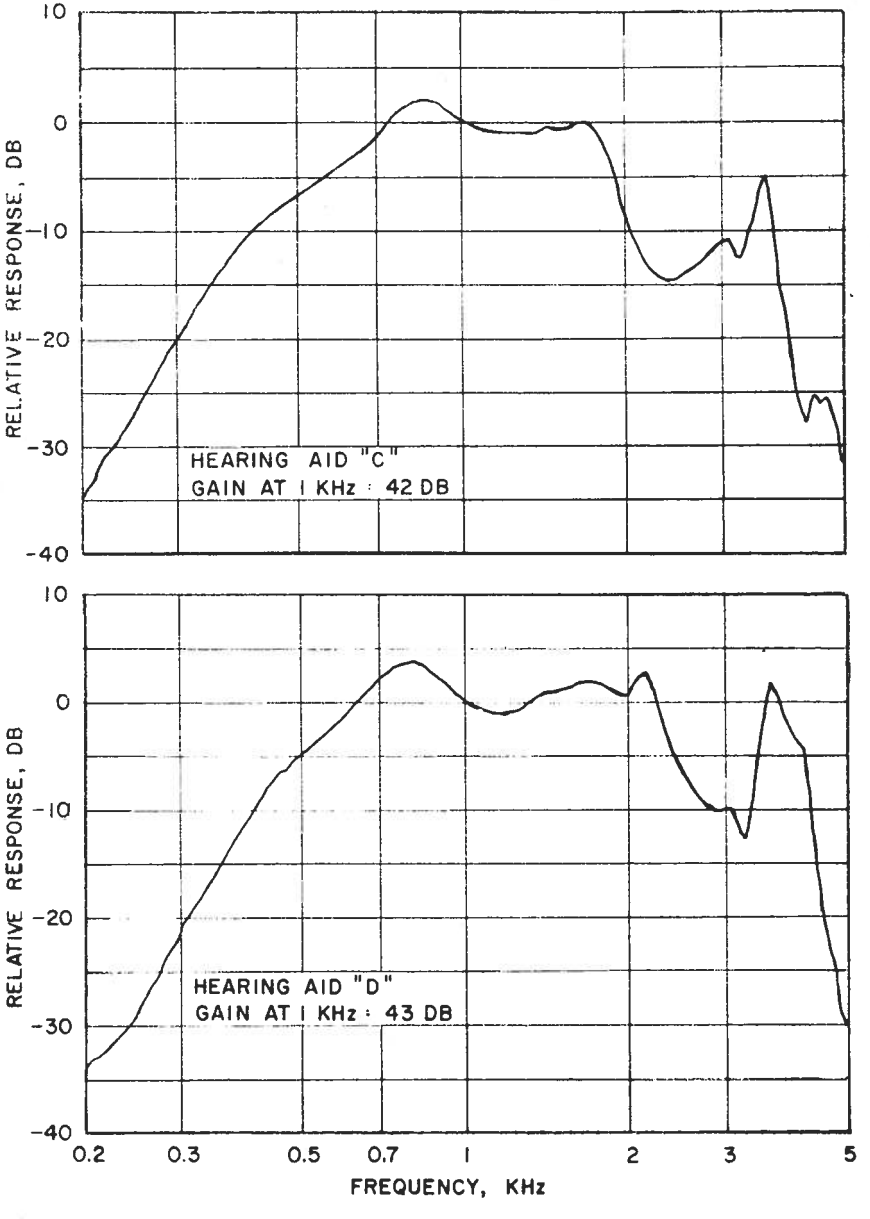

FIGURE 10.—Sinusoidal response for hearings aids C and D.

distortion. This is particularly noticeable in hearing aid D where the output is almost entirely distortion below 400 Hz. The sinusoidal response curves show little output in this region. The distortion output may cause a significant number of false clues in this region, as well as mask the fundamental response and cause the hearing aid to sound unusually noisy.

Of considerable importance is the correlation between the measurements made with this method and the conventional harmonic distortion measurements. The average of the notch depth, in decibels, was taken for the frequencies 500, 700, 900, 1200, 1500, 2000, and 3000 Hz, and the resulting decibel number was converted to percent distortion. The average of the harmonic distortion with inputs of 500, 700, and 900 Hz at a level of 75 dB was also taken. The correlation coefficient for all seventy-four aids between these two measures was .43. This number did not show any significant deviation if the aids were divided into low, medium, and high power categories and the coefficient determined separately for each category. This correlation is low enough to show that harmonic distortion testing is inadequate for predicting the distortion that occurs in a hearing aid with a complex input signal.

VI. CONCLUSION

The random-noise intermodulation test described should come closer to indicating the distortion obtained with a speech signal than the conventional testing procedures. The actual significance of the various degrees of distortion can only be obtained by extensive clinical testing. The partial correlation with harmonic distortion tests shows the desirability of doing that type of test if no better means is available, but also clearly shows the inadequacy of that test to predict the distortion with a complex input signal. In fact, it is doubtful that any one type of nonlinear distortion test is adequate for all purposes of hearing aid evaluation. This random-noise test is useful for comparisons between aids, but as a design tool it is deficient because it does not give information as to the distortion as a function of input frequency.

VII. ACKNOWLEDGMENTS

The author would like to thank M. A. Bassin for building the specialized equipment which was used, M. T. Kobal for making most of the measurements, and J. T. Priestley and E. L. R. Corliss for many helpful discussions.

REFERENCES

1. American Standard Method for Measurement of Electroacoustical Characteristics of Hearing Aids, S3.3–1960, American Standards Association, New York.

2. BROCKBAND, R. A. and C. A. A. WASS: Non-linear Distortion in Transmission Systems. J. Inst. Elec. Engrs. (London) Pt. 3 V92:45–56, 1945.
3. PETERSON, A. P. G.: Intermodulation Distortion. (An interesting exception.) Gen. Radio Experimenter, 25 (10), 1951.
4. FRAYNE, J. G. and R. R. SCOVILLE: Analysis and Measurement of Distortion in Variable-density Recording. J. Soc. Motion Picture Television Engrs., 32:648, 1939.
5. CCIF, Document No. 11 of the meeting of the Commission Mixt, CCIC/UIR March 2 and 3, 1937.
6. DAVENPORT, W. B., JR.: An Experimental Study of Speech Probability Distributions. J. Acoust. Soc. Am., 24:390–399, 1952.
7. BANG, B. E.: A. F. Non-linear Distortion Measurement by Wide Band Random Noise. Congress Report I of the Fourth International Congress on Acoustics, Copenhagen, 1962.
8. PRESTIGIACOMO, A. J. and D. J. MACLEAN: A Frequency Shifter for Improving Acoustic Feedback Stability. J. Aud. Eng. Soc., 10:110–113, 1962.
9. FLETCHER, HARVEY: Speech and Hearing in Communication, 80–81. D. Van Nostrand Company, Inc., New York, 1953.