INFORMATION AND CONTROL ANALYSIS OF EXTERNALLY POWERED ARTIFICIAL ARM SYSTEMS

Amos Freedy, M. S., Luigi F. Lucaccini, M.A., and John Lyman, Ph. D.

Biotechnology Laboratory
Department of Engineering
University of California
Los Angeles, California 90024

FOREWORD

The research described in this report, *Information and Control Analysis of Externally Powered Artificial Arm Systems,* by Amos Freedy, Luigi F. Lucaccini, and John Lyman, Report No. 67–44, was carried out under the technical direction of John Lyman.

This investigation was supported by the United States Veterans Administration Contract No. V1005P–9779, Washington, D.C.

ABSTRACT

This paper examines the problem of an adequate control system for an artificial arm based on a systems approach to the problem. A general model of the control loop is defined. Some representative past control systems are briefly examined and evaluated.

From the standpoint of control theory the movement pattern of the normal human arm is defined mathematically. Also the human operator is examined in terms of the ability to provide control information which could reproduce normal arm movement patterns.

Taking as system performance criteria the information limitations of the human and the trajectories of the human arm, a series of possible control systems is examined theoretically. It is concluded that of the systems examined, an optimal switching or "bang-bang" control system meets the adopted criteria best. A suggestion is made for reducing operator information requirements further by adding a nondeterministic predictive subsystem to the control system.

INTRODUCTION AND BACKGROUND

A major problem in optimizing any man-machine system is that of matching required system inputs and available operator outputs. Up to 25 years ago the problems of the man-machine interface were overlooked and it was taken for granted that man was an ideal adaptive operator with a high

system capacity.[a] This approach was possible because in early human-operated machines man acted as the power source as well as the controller. In such cases the control loop resembled a passive filter. As such, its input was attenuated, and the man-machine system could be considered an inherently stable system. At that stage of development the important factor in designing man-powered systems was to match the power requirements of the machine to operator power capabilities. As machines became larger and more sophisticated, external energy sources were added to human-operated control systems. The control loop of such systems contained active elements, such as amplifiers and motors, which introduced new parameters, such as gain and phase shift, that affected the stability of the system. Man-machine systems could no longer be taken for granted as adaptive. The requirement for stability analysis resulted. In response to this need various mathematical models of the human operator for the case of manual tracking were developed (Bekey, 1962; Elkind, 1957; Krendel and McRuer, 1960; Ragazzini, 1948; Tustin, 1947).

In the context of the amputee-prosthesis control system the problem is that of insuring that the amputee can provide the signals necessary to control the output device, a prosthesis. Unfortunately, however, very little attention has been given to the relevant man-machine interface problems in externally powered prosthetics, that is, to a mathematical description of the human operator in *nonmanual control.* In view of the growing research in externally powered prostheses, a clear need exists for such a model since specification of the transfer function of the operator in nonmanual control is a necessary step in the attempt to design an optimal prosthesis control loop.

Before approaching the problem of an optimal prosthesis control loop it is necessary to examine the amputee-prosthesis system. There are three basic units in the control loop: the operator, the coupling system, and the arm prosthesis, as shown in Figure 1. In externally powered upper-extremity

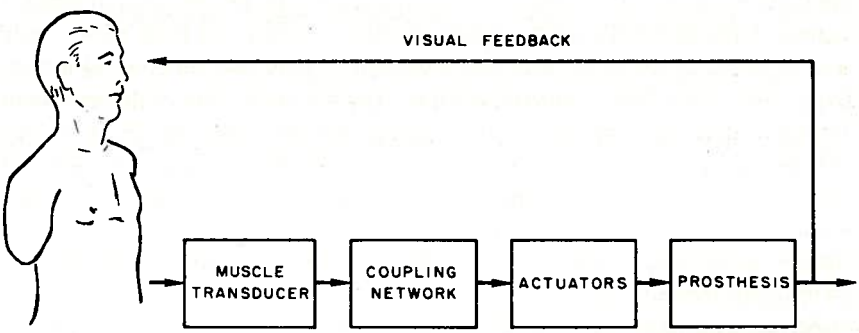

FIGURE 1.—The prosthesis control loop.

[a] System capacity is defined as the information rate a system can handle.

prosthetic systems the operator typically generates control signals through relative movements between fixed and movable parts of his body or through surface muscle transducers. Each control signal normally drives *only 1 deg. of freedom,* and the number of control signals that the operator can generate simultaneously is limited. A command in the form of some skeletal muscle contraction is sensed by and fed through muscle transducers to the coupling system, which processes the inputs and controls the arm prosthesis actuators. The operator receives feedback information about the state of the device from vision and other sense modalities.

Correct limb movement requires an error signal for each of its dimensional movements. The operator has to add vectorially the independent components of the error and must continuously generate a resultant spatial correction vector until the desired position is achieved. This requirement places a decision load on the operator in proportion to the number of degrees of freedom involved and the level of precision of positioning required for success.

It is the contention of this paper that externally powered prosthetic systems developed in the past have not supplied adequate functional regain to the amputee because the decision load placed on the human operator has not been successfully reduced. In the remainder of this section control problems in some representative upper-extremity prostheses will be reviewed. In succeeding sections some attempts will be made to design control loops to solve these problems.

Groth and Lyman (1961) reviewed the operation of both the IBM-Alderson IV–E electric arm and the Heidelberg pneumatic prosthesis. The IBM-Alderson Arm required the amputee to operate an extremely complex system of nine control switches. The amputee had to select and actuate the correct switch, then turn it off after completion of the motion. Each selection had to be made independently. Only one motor was available, and it had to be separately coupled by a clutch for each arm function. The Heidelberg pneumatic prosthesis was equipped with two sequential control valves. Although there was a separate source of power to each valve, their sequential arrangements permitted selection of only one function at a time from each valve. Since control selection and operation for both prostheses required that very careful discriminations be made by the amputee, his full attention was needed to achieve a given elementary function. Detailed evaluation studies revealed that the decision load on the amputee was excessive and degraded system performance in simple and complex test situations (Gottlieb, Santschi, and Lyman, 1953; Lucaccini, Wisshaupt, Groth, and Lyman, 1966).

An attempt was made by Tomovic and Boni (1962) to unburden the human operator by adding external information sources to the prosthetic control loop. The fingers of their prototype hand contained pressure sensi-

tive elements which, when subjected to pressure, supplied an input signal to a motor to initiate one of two grasp patterns. In the operating process it was necessary for the operator only to switch the hand on and to bring it in contact with an object. Information concerning the object size and weight, i.e., type of grasp pattern and grasp force required, were supplied by the pressure sensitive elements. Although this approach seems to promise a solution to hand prosthesis control, it is impractical for positioning an arm in space.

An attempt to insert a digital information source in the control of a prosthesis was reported by Wijnschenk (1964). Movement patterns of the normal human arm during standard daily tasks were recorded in digital form on a tape recorder. The operator selected a specific stored movement pattern by generating control signals through movements of his head. A powered arm brace was then controlled by the stored program. The selected movement pattern was normally inflexible except for an override feature. Although this approach has been proven useful (Wijnschenk, 1964), it is not adaptive; the pattern of movement is restricted to the boundaries of the control program and by the number of discrete control signals than can be generated to select from the available stored programs.

A concept for an adaptive system which makes use of the observed high autocorrelation of manipulator movements states was proposed by Lyman and Freedy (1967). In their system the input control information was provided by the operator as well as by an adaptive processor which made use of the history of the pattern of movement. The decision load associated with system operation was less than that normally required for externally powered devices. The approach promises a solution to the information problem but at the expense of increased hardware requirements, since a large memory and data processing capability are necessary to realize it. This concept has not yet been extensively studied and deserves a separate detailed discussion which is beyond the scope of this report.

CONTROL THEORY ASPECTS OF ARM MOVEMENT

The first step in this analysis is the determination of the movement pattern of the normal human arm, that is, its states of movement—velocity and position—as a function of time. The case of interest is that of ballistic movement (Stetson and McDill, 1923), in which a limb motion about a joint is started by contraction of one muscle and inhibited by the later overlapping antagonistic contraction of another muscle.

McWilliam (1965) measured the movement patterns generated by normal subjects when moving objects from place to place. His data yield the typical velocity curve for ballistic motion shown in Figure 2 in which velocity reaches a peak near the midpoint of movement and time.

McWilliam (1965) made the following conclusions about the characteristics of human arm movement.

1. Peak velocity and total time vary with the distance of movement, while the waveform remains the same.
2. Movements about different joints in the arm have the same general form.
3. Addition of loads to the arm slows movement down but does not alter its basic characteristics.
4. When movements of more than one joint are combined to position the hand, the hand itself shows the typical velocity waveform of Figure 2.

Supporting evidence for McWilliam's conclusions comes from experiments by Smith (1962). Subjects were required to position a pointer by sliding it to one of a number of possible locations along a track. Spring constant, inertia, and coefficient of friction were varied from trial to trial. The characteristics of the resulting movement states are shown in Figure 3. Subjects used constant force to accelerate the load until the error dropped to one half. They then applied an equal opposing force to decelerate the velocity until the error and the velocity approached zero simultaneously.

The movement state curves obtained by McWilliam (1965) and Smith (1962) can clearly be described by the second order system equation

$$\frac{d^2x}{dt^2} = \pm K, \tag{1}$$

where K is positive and negative for the acceleration and deceleration segments, respectively. Solving for velocity as a function of position in the acceleration segment we obtain

$$x - x_o = \frac{v^2}{2K}, \tag{2}$$

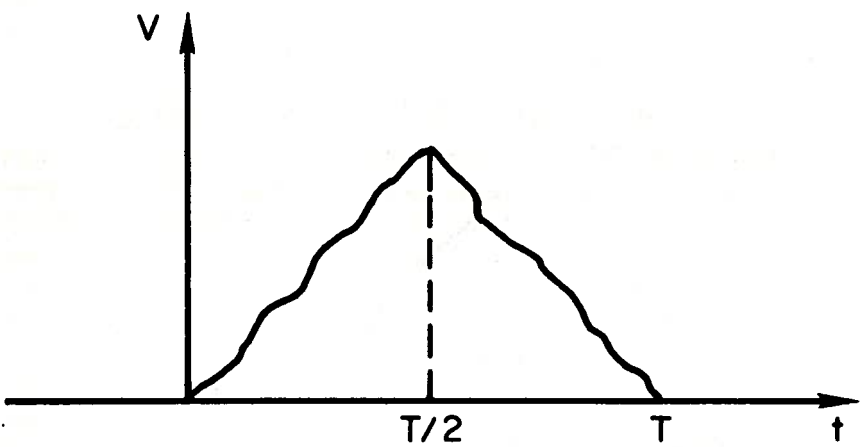

FIGURE 2.—Normal arm movement velocity curve (McWilliam, 1965).

where x_o is the initial position. Equation (2) is the equation of a parabola. Similarly, the deceleration segment is a parabola. Equation (2) can be plotted on a phase plane diagram as shown in Figure 4 and represents the best trajectory for a second order system with the limitation of some finite acceleration (Gibson, 1963).

Additional data from McWilliam (1965) show peak velocity as a function of the distance moved. The subject was asked to move an object between two points by moving his arm in the plane of elbow rotation. His data are replotted in Figure 5 in a normalized phase plane diagram. In an approximate fashion the curve represents the switching boundary of the human arm system and defines the deceleration trajectory of the human arm. Accelera-

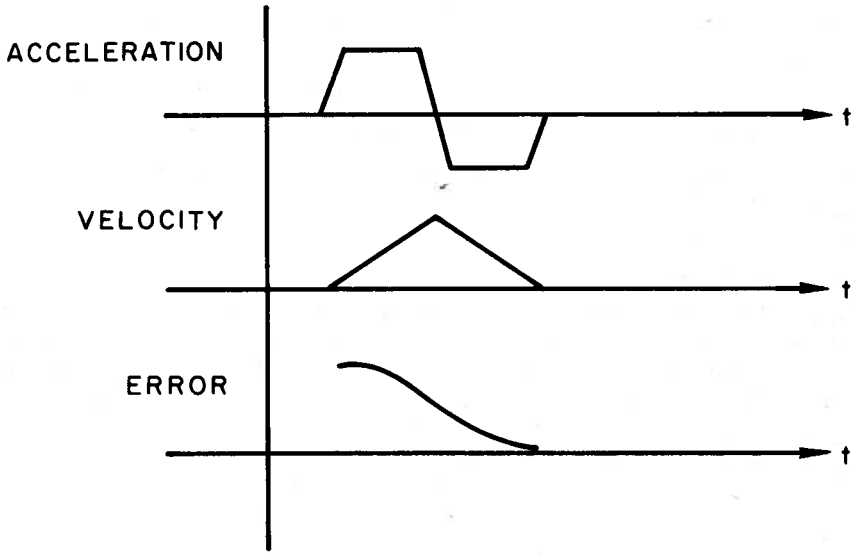

FIGURE 3.—Movement states of the normal arm (Smith, 1962).

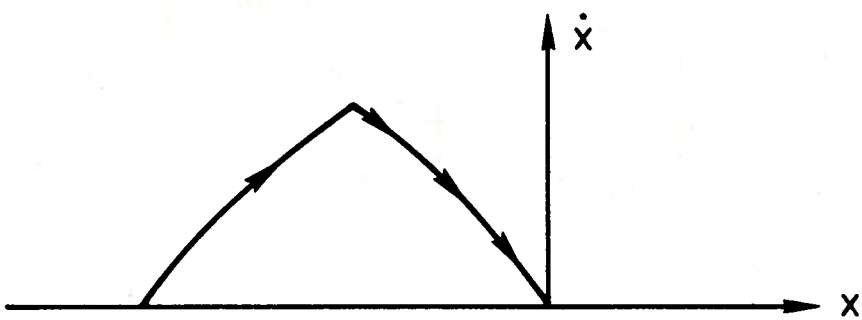

FIGURE 4.—Phase plane plot of normal arm movement.

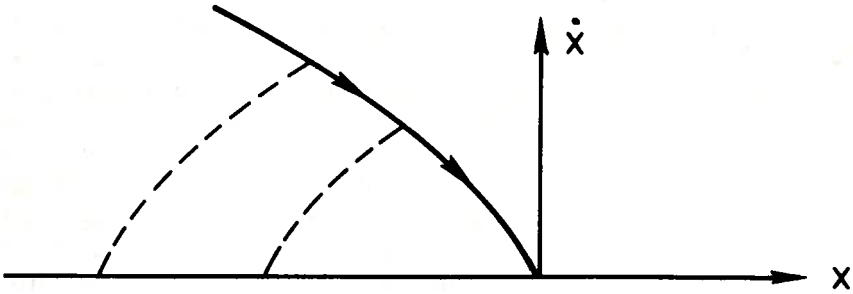

FIGURE 5.—Switching boundary of the normal arm.

tion from any initial condition will switch to deceleration upon intersecting this curve as shown in Figure 5.

A system that will produce such trajectories is shown in Figure 6. The plant consists of an ideal second order system, $\frac{K}{s^2}$, and is driven by an ideal relay. The feedback loop contains an anticipation network which provides for an optimum switching boundary, where K is a function of the initial and final position of the arm. This system represents an optimum "bang-bang" switching control.

Since the human arm can be described as a second order system with the trajectories of the above model, for our purposes the human arm will be assumed to be an *ideal second order switching system* and the equations of motion of the human arm, (1) and (2), will be used as the model for the ideal prosthesis trajectories assumed in the design of a prosthetic control system in a later chapter.

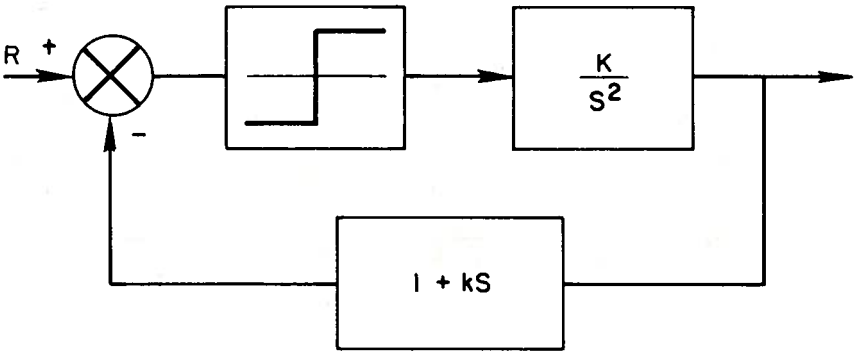

FIGURE 6.—A system which produces movements identical to the normal arm.

THE INFORMATION CAPACITY OF THE HUMAN OPERATOR

Information Rate in Manual Operation

In open loop information transmission, such as piano playing, a skilled operator can continuously transmit up to 22 bits per second with 37 keys (Quastler and Wulff, 1955). In closed loop operation, where the operator acts as an error generator, the maximum rate of transmission is much lower. Under such conditions the operator acts both as a receiver and a transmitter whose output is the difference between the instantaneous state of the system and its required final state. The computational time lags for such an operator reduce his system capacity.

An indication of the information rate that a human can generate under closed-loop conditions can be deduced from experiments by Telford (1931), Vince (1948, 1949a, 1949b), Poulton (1950), and Welford (1952). Telford (1931) suggested that a process analogous to the refractory period in a nerve fiber [b] governs the central nervous system during closed-loop operation such as tracking. His original work showed that the reaction time to the second of two successive sound stimuli was lengthened if the time interval between the two stimuli was 0.50 second or less. Similar results were obtained by Poulton (1950) who showed that stopping a zig-zag movement between two rows of contacts was difficult if the time allowed between the stop signal and the time the contact was reached was less than 0.50 second. Similar observations were made by Vince (1949a) who suggested that the human operator was unable to utilize visual feed-back after his corrective movement was initiated. Welford (1952) suggested that the human operator is a "single channel information processing system, and therefore a new stimulus cannot be dealt with when the system is receiving information, processing it, or monitoring the responding movement." These results are discussed at length by Bekey (1962) in his study of the human operator.

On the basis of the above line of experimentation, Bekey (1962) developed a sampled data model of the human operator for manual compensatory tracking tasks. The model is shown in Figure 7. The sampler and hold circuit of the model incorporates the notion of a basic refractoriness

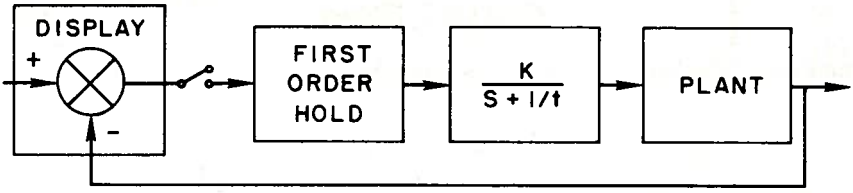

FIGURE 7.—Sampled data model of the human operator (Bekey, 1962).

[b] Refractoriness in the nerve fiber refers to the time interval following the occurrence of a nerve impulse during which the fiber cannot respond to any stimulus.

or intermittency in information processing by the operator. In Bekey's model the operator is assumed to sample "information taken from the perceptual input at discrete intervals." The sampling frequency determines the rate at which the operator can effect changes in his output when he acts as a controller in a closed loop. Empirical studies by Bekey (1962) indicate that an average sampling interval of about 0.33 second, or a sampling of 3 c.p.s., is a reasonable assumption for compensatory tracking tasks.

Supporting experimental evidence for this assumption comes from the fact that human response curves for manual tracking tasks show that the response spectrum of the operator is dominated by a frequency component of 2 c.p.s. (Craik, 1947, 1948). Measurements of tracking records made by Hill, Gray, and Ellson (1947) showed that 80 percent of the wavelengths of the correcting responses of trained trackers ranged between 0.2 and 0.6 second. Thus, in closed loop operation it seems reasonable to assume that the system capacity of the human operator is restricted to a frequency band of 2 to 3 c.p.s.

An expression for the system capacity of the operator can be derived from the general expression for the channel capacity of an information system:

$$C=-B\sum_{j=1}^{j=n} P_j \log_2 P_j \text{ bits/sec.,} \tag{3}$$

where n is the total number of distinguishable signal levels, P_j is the probability of occurrence of the jth signal level, and B is the bandwidth of the system (Shannon and Weaver, 1949). In the case of a manually operated control system, the channel capacity is limited by the bandwidth of the operator and the number of signal levels, n, that he can distinguish. Assuming that the signal levels the operator can distinguish are all equally probable, the system capacity of the operator can be written as

$$C=B \log_2 n \text{ bits/sec.} \tag{4}$$

Since B has been shown to be approximately 3 c.p.s. (Bekey, 1962; Craik, 1947, 1948; Hill et al., 1947), channel capacity can be written as

$$C=3 \log_2 n \text{ bits/sec.,} \tag{4a}$$

and since $B=1/T$, where T is the sampling interval,

$$C=\frac{1}{0.33} \log_2 n \text{ bits/sec.} \tag{4b}$$

Information Rate in Nonmanual Operation

The control of a multidimensional movement device which has the same movement patterns as the human arm requires input signals with

high information content. In the normal arm these signals come through voluntary control loops which are aided by reflex loops. For practical purposes, the only control signals available for operating an artificial limb are voluntary movements of residual muscles, such as upper trunk muscles. Various approaches to methods of generating and sensing such control signals have been described by Weltman, Groth, and Lyman (1959), and by Lucaccini, Freedy, and Lyman (1967). They will not be discussed further here.

It is generally agreed that the fineness of control (small motor units), the rich sensory feedback available, and the lifelong development of skill in manual tasks are all factors which make the human hand the superior output device it is. In contrast, upper body muscles sites, with coarser control (large motor units), less sensory feedback, and primary use in postural support, are clearly inferior to the hand as an output device and less able to transmit control information.

How, then, can the operator's system capacity be defined for the nonmanual case? In view of the above differences between the manual and nonmanual cases the expression for system capacity in the manual case is an overestimate.

Assuming that sampling time is proportional to and reflected in reaction time, then an adjustment to equation (4) is possible. Comparison of simple RT data obtained by Hick and Bates (1950) for manual response and by Lucaccini et al. (1967) for upper trunk muscles responses shows an average increase of 0.25 second in nonmanual RT over the manual case. If we can assume that sampling interval is increased proportionately from 0.33 second to about 0.58 second then equation (4) can be restated for surface muscles as

$$C=\frac{1}{0.58}\log_2 n \text{ bits/sec.} \tag{5}$$

Thus, in the nonmanual case the operator can generate one control change per 0.58 second and he has an information rate of 1.73 $\log_2 n$ bits/sec.

For the case of three surface muscle transducers, operator system capacity can be expressed as

$$C=-\frac{3}{T}\sum_{j=1}^{n} P_j \log_2 P_j \text{ bits/sec.,} \tag{6}$$

where n is the number of output levels possible for each muscle site, and P is the relative probability of use of each transducer. Equation (6) can be rewritten, under the assumptions that n is the same for all muscle sites and that the frequency of use of the sites is the same, as

$$C=\frac{3}{T}\log_2 n \text{ bits/sec.} \tag{7}$$

Again, an adjustment in sampling interval seems in order. The data of Lucaccini, et al. (1967) for complex RT obtained with three such muscles sites indicated that an increase of 0.22 second in RT occurred and sampling interval should be increased accordingly. Therefore, T is assumed to be $0.58+0.22=0.80$ second, and system capacity is then

$$C=\frac{3}{0.80}\log_2 n \text{ bits/sec.} \tag{7a}$$

or

$$C=3.75\log_2 n \text{ bits/sec.} \tag{7b}$$

or

$$C=1.25\log_2 n^3 \text{ bits/sec.} \tag{7c}$$

A detailed derivation of the expressions for operator system capacity in nonmanual control is given by Freedy (1967).

EVALUATION OF SOME CONTROL MODES

Definition of the Problem

Assuming that an idealized three-dimensional upper-extremity prosthesis capable of simultaneous motion of all three dimensions is to be controlled by an amputee using three body muscle sites, questions to be answered in deciding upon a workable control system are: 1. Whether the operator can generate enough information to control it simultaneously in three dimensions, and 2. whether the operator can generate control signals such that the arm is driven with trajectories similar to those of the normal arm.

A general representation of the relevant control loop was shown in Figure 1. The assumed arm has three servomotors, one for each axis of movement. Control information is fed from the three muscle transducers of the operator through the coupling system to the arm. The coupling system determines the control mode.[c] Each servomotor is coupled independently to the coupling system. Each one of the three mutually exclusive error signals that the operator generates can be fed into the coupling system independently in parallel or in any logical combination of two or three, depending on the chosen control mode. Four modes can be defined in terms of the method the operator uses to control the arm. They are 1. position, 2. velocity, 3. frequency generation, and 4. switching (on-off and "bang-bang"). Each control mode will be examined in terms of its information requirements and its ability to produce ideal trajectories for the prosthesis assumed above.

[c] By control mode is meant the correspondence between the operator's input signal and the output of the arm.

Position Control

In the position mode of operation the relative level of the operator's transducer output has a one-to-one correspondence with the position of the servomotor. In such a system the coupling network constitutes a closed loop position servo in which the operator sets up the reference input as shown in Figure 8. The output of each transducer corresponds to one dimension of movement. By mapping a position in space onto three force vectors exerted on the three muscle transducers, the operator positions the arm. The major advantage of such a system is that it gives the operator force and visual feedback regarding his position in space. The major disadvantage of this system is the high information content required for operation. The operator must be able to generate at each muscle site a large range of force levels to be able to position the arm at any point in space. The amount of information, H, required to introduce a change in state is $\log_2 \left(\frac{1}{D}\right)^3$ where D represents the smallest increment of the normalized input required by the system in order to change the state of the arm in space. The rate at which the operator can generate information with three transducers, C, was shown to be $1.25 \log_2 n^3$. Thus, the time required to position an arm in space with this control mode will be:

$$t = \frac{H}{C} \simeq \frac{1}{1.25} \frac{\log_2 \left(\frac{1}{D}\right)^3}{\log_2 n^3} \text{ sec.}$$

Assuming that $\frac{1}{D} = n$, which is a liberal assumption, each change of state will require 0.8 second, an excessive amount of time.

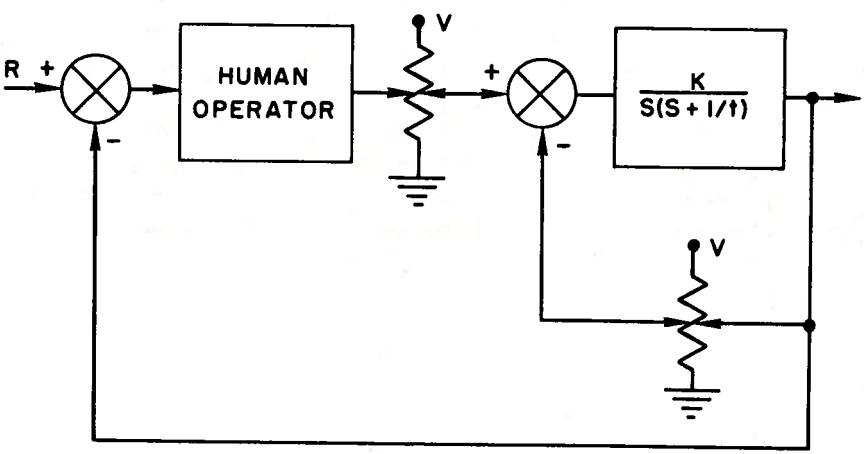

FIGURE 8.—Position control loop.

The position mode also has the limitation that a high degree of isolation[d] between control sites is necessary. The amputee must generate and maintain distinct force levels at each muscle site. Evidence exists to show that a high degree of isolation is sometimes impossible to maintain and that the maintenance of a constant force level at each control site interferes with normal body activities such as breathing (Rey, 1965).

A position control system would pose no problem in meeting the requirement of producing a trajectory which is similar to that of the normal arm. With the proper damping constant a position-following control system could be designed to yield a trajectory similar to an optimum second order switching trajectory.

Velocity Control

In the velocity control mode the relative level of a muscle transducer's output signal has a one-to-one correspondence with the power supplied to the servomotor. Thus, the relative level of force the operator applies on the transducer corresponds to the instantaneous acceleration state of the movement and determines velocity of movement, just as pedal pressure on the accelerator of a car governs the velocity of the car.

To be able to control each arm dimension in both directions or degrees of freedom about its axis a control site must be able to generate signals of two polarities in addition to controlling velocity. A method of polarity switching was used by Lucaccini et al. (1967) in which the operator initiated a ramp control signal whose slope determined the required signal polarity. After selecting polarity the operator then controlled velocity with the same transducer. Figure 9 shows a velocity control system with a polarity selection arrangement for one control site. Three such control channels would permit

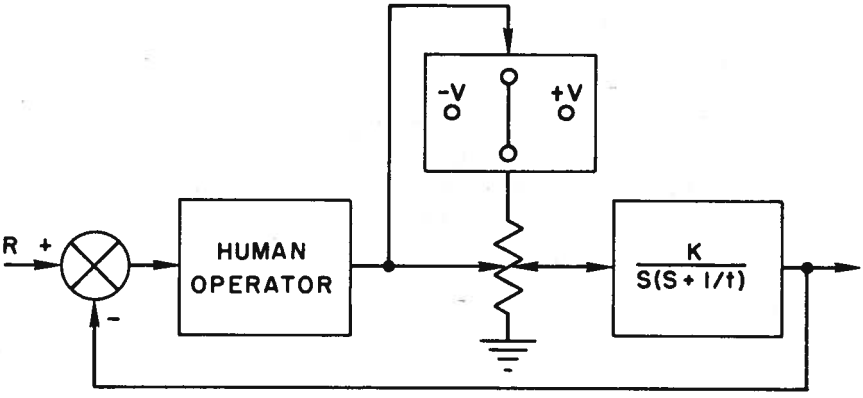

FIGURE 9.—Velocity control loop.

[d] Isolation refers to the ability to generate a control signal without activating another site inadvertently.

an operator to control a three-dimensional arm from three body control sites. From an information standpoint the operator could move the arm in three dimensions with the proposed velocity system.

It appears that the information requirements for the generation of optimum trajectories are excessive. In a velocity control system the time characteristics of the operator input will determine precisely the shape of the trajectory of the arm. Figure 10 shows a typical input-output relationship for a velocity control system which would result in an arm trajectory similar to that of the normal arm. The figure shows that the operator must continually vary his control signal in the manner shown for each dimension of the arm in motion. The control information, H, required to do this in three dimensions is $\log_2 \left(\frac{1}{D}\right)^3$ per change. Since the operator's system capacity, C, is $1.25 \log_2 n^3$, the time required to perform an operation in the required manner would permit only very slow rates of operation.

Frequency Control

A control mode similar to velocity control was suggested by Rey (1965) and is termed frequency control. Her studies of the available control signals from upper body muscle transducers showed that an operator could gen-

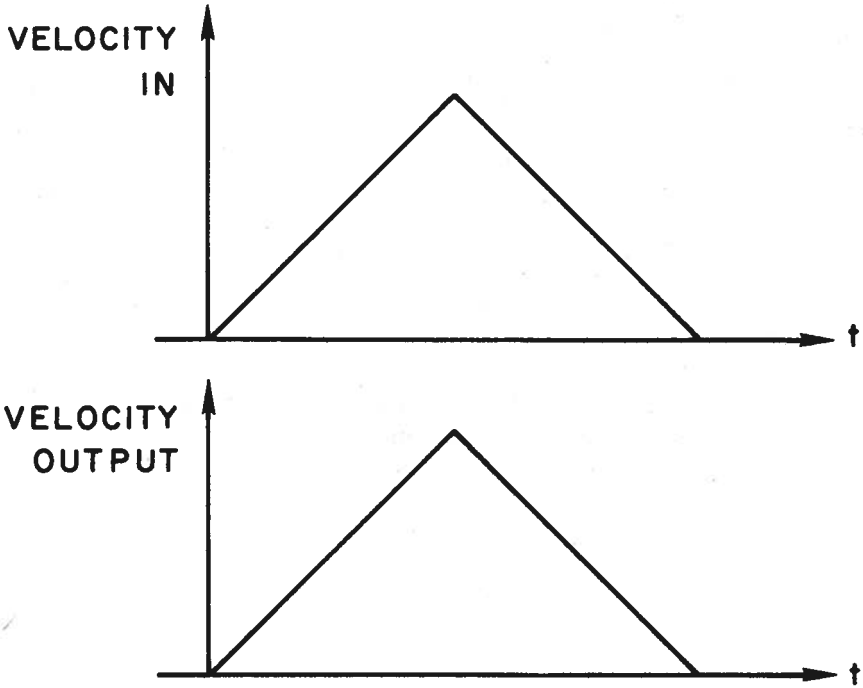

FIGURE 10.—Input-output relationships in the velocity control loop (for t <<1).

erate saw-toothed wave-like signals at frequencies from 0.3 to 1 c.p.s. Generation of signals in this manner did not interfere with normal body activities (breathing, etc.) and the operator could discriminate between frequencies of a certain ratio or larger without feedback. A system utilizing such control signals is shown in Figure 11. A detailed description of the system is given by Lucaccini et al. (1967) and Freedy, Rey, and Lyman (1967).

Each transducer is assumed to be coupled to a separate servomotor. Operation of the system involves two phases: 1. Selection of the signal polarity, and 2. controlling velocity just as with the velocity control mode discussed above. The polarity of the signal can be selected as in the case of the velocity control mode. The instantaneous frequency of the sawtooth can be used to control power by differentiating the positive slope of the saw-toothed signal. As in the velocity control mode, production of an ideal trajectory would require information content beyond the operator's system capacity.

On-Off Control

Another control mode is possible with the use of a switching network, i.e., an on-off or a "bang-bang" control configuration. Such systems are classified as nonlinear systems and their analysis is more complex than the systems discussed up to now. A distinction should be made between on-off and "bang-bang" control. The latter allows the operator complete control over the movement trajectory because acceleration and deceleration are both controlled, while the former allows control only of acceleration, trajectory is determined by the servomotor dynamics.

In the on-off system, constant power is supplied to the servomotor; the operator controls power by turning a simple switch on or off. A schematic representation of an on-off system is shown in Figure 12. Each switch controls a single degree of freedom and two switches will be required for

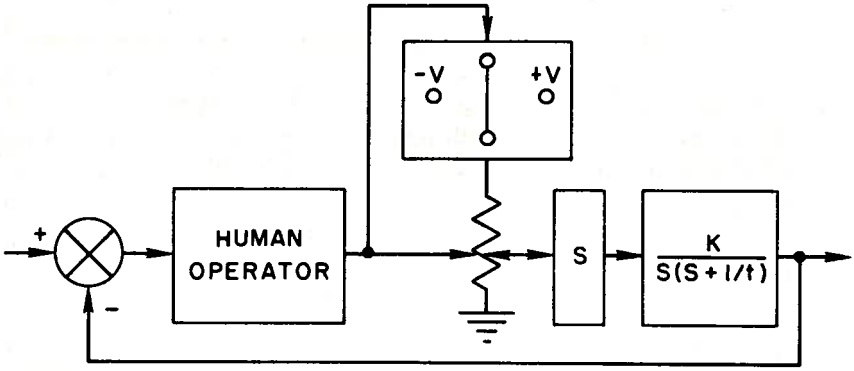

FIGURE 11.—Frequency control loop.

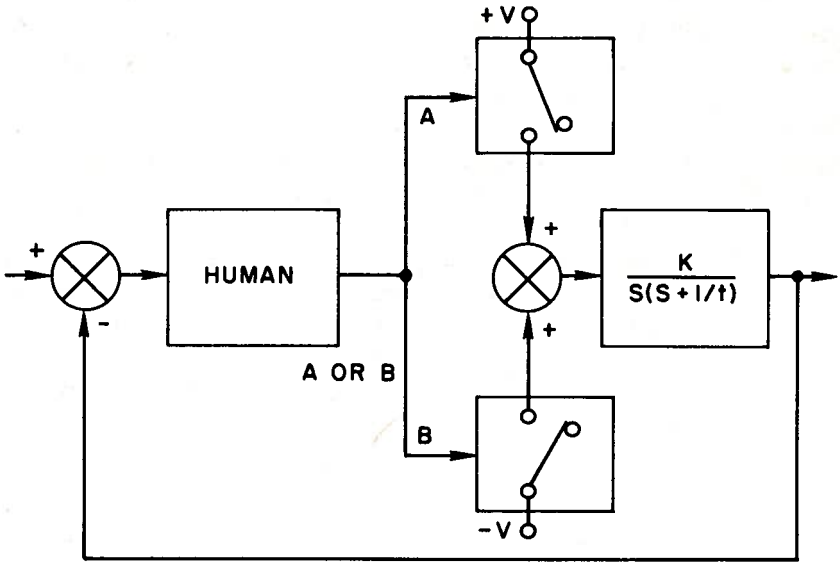

FIGURE 12.—On-off switching control loop.

each one-dimensional movement. If each switch is operated by a separate control muscle site, a total of six muscle sites would be required to control the arm in three dimensions; that is, double the number of control sites assumed to be available. The requirement of six independent muscle control sites is an extremely difficult requirement and it is not likely that it could be met, at least with electromechanical transducers.

An alternative approach would be to use logical combinations of the three transducer switches to select and activate each of the 6 deg. of freedom available (Weltman, DeBiasio, and Lyman, 1962). This approach eliminates the possibility of simultaneous control of three-dimensional movement and introduces serious training problems; however, it does have the advantage of a low information rate requirement, since the operator has to generate only two signal levels per transducer. The required information, H, per change in state is only $\log_2 2^3$ or 3 bits. Unfortunately, the low information requirement is not a sufficient condition to permit the generation of the proper trajectories since the latter will depend only on the "built-in" inertia, friction, etc., of the arm. To provide proper control of the required trajectories a "bang-bang" control loop may be introduced.

"Bang-Bang" Control

The problems of the on-off mode can be overcome with a "bang-bang" switching system. In the "bang-bang" system proposed here each control site is permanently coupled through an independent channel to one servomotor, and controls one dimension of movement in 2 deg. of freedom. As

shown in Figure 13 any input force, e, that the operator generates, where $a<e<b$, will correspond to a negative step input and any force where $b<e$ will correspond to a positive step input signal. Thus the operator has to discriminate between three force levels, 0, $0<e<b$, and $b<e$, and the total information that the system requires per one-dimensional movement is $\log_2 3$ or 1.6 bits. Operation of all three dimensions would require 4.8 bits per change which is not an excessive requirement.

In the "bang-bang" system the trajectory requirement can be satisfied. The transfer function of the arm in each dimensional movement has been assumed to be an ideal second order system of the form $\frac{k}{S^2}$. An input force applied to the coupling network would be transposed into a positive or negative step, depending on its magnitude, causing a linear increase in velocity over time with slope K. In the process of controlling the movement the operator could either accelerate or decelerate the servomotor. To obtain an optimum trajectory of movement, the operator would need only to reverse the polarity of the coupling network output by changing the level of his applied force at some point during the movement. For example, suppose the operator wished to move the end point of the arm in a certain direction in one-dimensional movement. He would apply a force $b<e$ to produce a positive acceleration, K. At the midrange of his movement he would then change his force level so that $e<b$ to produce a deceleration, $-K$. If he had succeeded in switching at the right time, the end point of the arm would reach the target location at zero velocity. The trajectory of such a movement is shown in Figure 14 and is identical to the idealized trajectory of the normal arm. To produce a three-dimensional movement the operator would add the three vector components of each dimensional movement to produce an optimum three-dimensional vector trajectory.

DISCUSSION AND RECOMMENDATIONS

Various control system configurations for an arm prosthesis have been discussed in terms of their ability to satisfy the design criteria of 1. operator controllability over the movement states and 2. input information content requirements. The systems of position, velocity, frequency, and simple on-off control do not appear feasible for prosthesis control purposes due to their high information content requirements. It appears that both from an

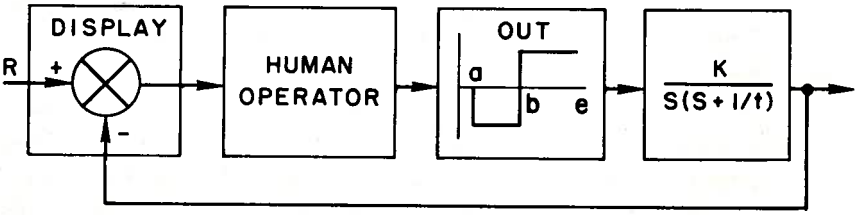

FIGURE 13.—The "bang-bang" switching control loop.

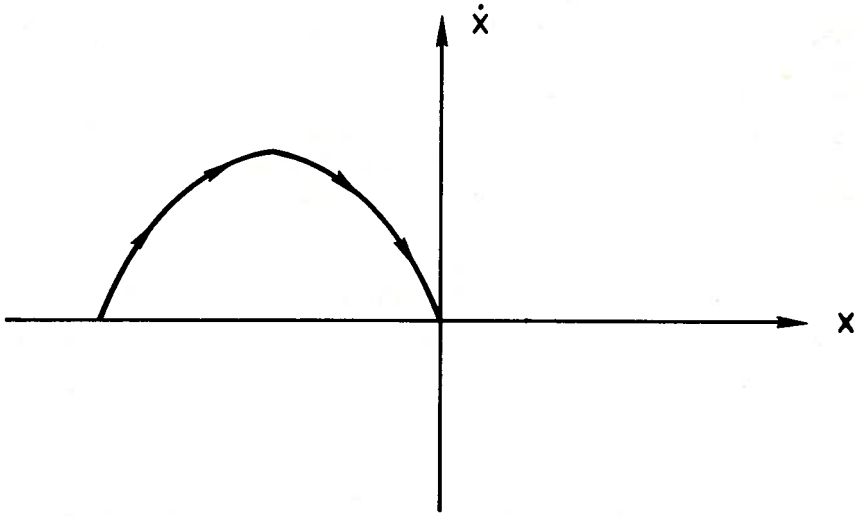

FIGURE 14.—Movement trajectory of the "bang-bang" control system.

information and a control theory point of view the "bang-bang" control system alone permits the amputee to control the arm prosthesis in an optimal manner.

It is recommended that futher studies be done in order to lower the input information requirements of the proposed system. One of the ways in which that goal can be achieved is by adding an nondeterministic predictive subsystem to the control loop. The operator would have to generate only one bit of information for each dimension of control in order to start a movement. On the basis of the probability that a certain future state is required the subsystem would supply the proper control signal to the system. The problem in such a system is how to generate the probability function. One argument for implementing this concept would be to assume a relationship between the position of the arm in space, its expected range of movement, and its past history of movement patterns. If such a relationship could be determined mathematically, it could be used to generate the a priori conditions for the next future state. Once in the new state the subsystem would again generate the input required to drive the arm to its next future state, and so on. That is, as each new state is reached the process would repeat itself until the desired terminal state is achieved.

A practical system of the type proposed could be realized by employing a conditional probability computer of the type suggested by Uttley (1959). In a conditional probability information processing system control information would be supplied by the operator as well as by the subsystem. Crude input signals from the operator, perhaps of the on-off variety, could produce an ideal movement trajectory over an expected range. The desire of the

operator to move the arm to a position other than the expected range would require additional corrective input signals, and the required control information would be inversely proportional to the probability that the new state would be the expected state. At present the proposed system is impractical since it would require expensive and sophisticated hardware. However, current progress in the development of integrated electronic circuits indicates that it is very likely that such a system could be realized in the near future.

ACKNOWLEDGMENTS

The authors gratefully acknowledge the effect of the many critical discussions with Dr. Eugene Murphy of the Prosthetic and Sensory Aids Service of the U.S. Veterans Administration. Thanks are also due to Dr. Horst Arp for reading and commenting on the manuscript.

REFERENCES

1. Bekey, G. A.: An Investigation of Sampled Data Models of the Human Operator in a Control System. ASD Technical Document Report, G2–36, Wright-Patterson Air Force Base, Ohio, Feb. 1962.
2. Craik, K. J. W.: Theory of the Human Operator in Control Systems: I. The Operator as an Engineering System. Brit. J. Psych. 38: 56–61, 1947.
3. Craik, K. J. W.: Theory of the Human Operator in Control Systems: II. Man as an Element in Control System. Brit. J. Psych., 38: 142–148, 1948.
4. Elkind, J. I.: Characteristics of the Human Operator in Simple Manual Control Systems. Lincoln Laboratory Report No. 111, MIT, Lincoln, Mass., June 1957.
5. Freedy, A.: An Information Theory Approach to Control of Externally-Powered Artificial Arms. M.S. thesis, Department of Engineering, University of California, Los Angeles, California, 1967.
6. Freedy, A., P. Rey, and J. Lyman: Transducer Controlled Multidimensional Movement Devices. Unpublished Report, Biotechnology Laboratory, Department of Engineering, University of California, Los Angeles, California, 1967.
7. Gibson, J. E.: Nonlinear Automatic Control. McGraw-Hill, New York, 1963.
8. Gottlieb, N. S., W. Santschi, and J. Lyman: Evaluation of the Model IV-E2 Electric Arm. Memorandum Report No. 18, Department of Engineering, University of California, Los Angeles, California, Feb. 1953.
9. Groth, Hilde and J. Lyman: Evaluation of Control Problems in Externally-Powered Arm Prostheses. Orthopedic and Prosthetic Appliance Journal, 174–177, June 1961.
10. Hick, W. E. and J. A. Bates: The Human Operator of Control Mechanism. Permanent Records of Research and Developments No. 170204, Ministry of Supply, London, England, May 1950.
11. Hill, H., F. Gray, and D. G. Ellson: Wavelength and Amplitude Characteristics of Tracking Error Curves. AAF-AMC Engr. Report TSEAA–694–2D, Wright Field, Ohio, April 1947.
12. Krendel, E. S. and D. T. McRuer: A servomechanism Approach to Skill Development. J. of the Franklin Institute, 29: 24–42, 1960.
13. Lucaccini, L. F., A. Freedy, and J. Lyman: Externally-Powered Upper Extremity Prosthesis Systems: Studies of Sensory Motor Control. Department of Engineering Report No. 67–12, University of California, Los Angeles, California, Feb. 1967.

14. LUCACCINI, L. F., R. WISSHAUPT, H. GROTH, and J. LYMAN: Evaluation of the Heidelberg Pneumatic Prosthesis. Bulletin of Prosthetics Research, BPR 10–5: 58–115, Spring 1966.
15. LYMAN, J. and A. FREEDY: Inhibitory Control: Concept for A First Model. Proceeding of the USC-NASA Conference on Manual Control, University of Southern California, Los Angeles, California, March 1967.
16. MCWILLIAM, R.: Some Characteristics of Normal Movements in the Upper Limb. Proceedings of a Symposium on Powered Prostheses, Roehampton, England, 11–16, Oct. 1965.
17. POULTON, E. C.: Perceptual Anticipation and Reaction Time. Quart. J. Exp. Psych., 2:99–112, 1950.
18. QUASTLER, H. and V. J. WULFF: Human Performance in Information Transmission. Control System Laboratory Report R–62, University of Illinois, Urbana, Illinois, 1955.
19. RAGAZZINI, J. R.: Engineering Aspects of the Human Being as a Servomechanism. Unpublished Report, Columbia University, New York, 1948.
20. REY, P.: Studies in Non-Manual Muscular Control. Unpublished work Biotechnology Laboratory, University of California, Los Angeles, California, 1965.
21. SHANNON, C. E. and W. WEAVER: The Mathematical Theory of Communication. The University of Illinois Press, Urbana, Illinois, 1949.
22. SMITH, O. J. M.: Nonlinear Computations in the Human Controller. IRE Transaction on Biomedical Electronics, 125–128, April 1962.
23. STETSON, R. H. and J. A. MCDILL: Mechanism of Different Types of Movement. Psychol. Monog., 32:18–40, 1923.
24. TELFORD, C. N.: Refractory Phase of Voluntary and Associative Responses. J. Exp. Psych., 14:1–35, 1931.
25. TOMOVIC, R. and G. BONI: An Adaptive Artificial Hand. IRE Transaction on Automatic Control, April 1962.
26. TUSTIN, A.: The Nature of the Operator's Response in Manual Control and Its Implication to Controller Design. J. Inst. of Elect. Engr., London, 94(II–A): 190–202, 1947.
27. UTTLEY, A. M.: The Design of Conditional Probability Computers. Information and Control, 2:1–24. 1959.
28. VINCE, M. A.: The Intermittency of Control Movements and the Psychological Refractory Period. Brit. J. Psych., 38: 149–157, 1948.
29. VINCE, M. A.: Corrective Movements in a Pursuit Task. Quart. J. Exp. Psych., 1: 85–103, 1949a.
30. VINCE, M. A.: Rapid Response Sequences and the Psychological Refractory Period. Brit. J. Psych., 40: 23–40, 1949b.
31. WELFORD, A. T.: The "Psychological Refractory Period" and the Timing of High-Speed Performance: A Review and a Theory. Brit. J. Psych., 43: 2–19, 1952.
32. WELTMAN, G., F. C. DEBIASIO, and J. LYMAN: Control Logic for a Myoelectric Servo-Boost System. Memorandum Report No. 16, Department of Engineering, University of California, Los Angeles, California, Aug. 1962.
33. WELTMAN, G., H. GROTH, and J. LYMAN: An Analysis of Bioelectrical Prosthesis Control. Report No. 59–49, Department of Engineering, University of California, Los Angeles, California, July 1959.
34. WIJNSCHENK, M. J.: Engineering Evaluation and Preliminary Studies of the Case Research Arm Aid. Report No. EDC4–64–3, Medical Engineering Laboratory, Case Institute of Technology, Cleveland, Ohio, 1964.