AN ADAPTIVE APPROACH TO OPTIMUM SWITCHING CONTROL OF ARTIFICIAL ARMS

Amos Freedy, M.S., Luigi F. Lucaccini, M.A., and John Lyman, Ph. D.

Biotechnology Laboratory
Department of Engineering
University of California
Los Angeles, California 90024

FOREWORD

The research described in this report, *An Adaptive Approach To Optimum Switching Control of Artificial Arms,* by Amos Freedy, Luigi F. Lucaccini, and John Lyman, Report No. 67–47, was carried out under the technical direction of John Lyman.

This investigation was supported by the United States Veterans Administration Contract No. V1005P–9779, Washington, D.C.

ABSTRACT

The problems involved in adapting a "bang-bang" switching system for control of an externally powered artificial arm are considered. Stability problems of the "bang-bang" system were solved by designing and constructing an adaptive self-stabilizing subsystem. The overall system was simulated on an analog computer for control of one-dimensional movements. In a pilot study four subjects using manual control demonstrated that the system would reach stable operation.

INTRODUCTION

In a previous report (Freedy, Lucaccini, and Lyman, 1967, elsewhere in this issue) information and control aspects of the operation of artificial arm systems were considered in selecting a criterion against which the performance of proposed externally powered limb control systems could be assessed. The performance criterion selected was that the operator should be able to reproduce normal human arm movement patterns with the control information available in nonmanual operation. A series of possible control system configurations was examined and an optimal switching or "bang-bang" control system was found to meet the criterion best.

In this report the problems of adapting the "bang-bang" system for the control of an artificial arm will be considered. Attention will be directed to two aspects of system behavior: a. determining the system parameters

which will allow the arm-operator system to behave in a stable manner and b. providing the system with the ability to reach a terminal state in the shortest possible time, that is, optimizing it with respect to time.

THE "BANG-BANG" CONTROL SYSTEM

System Operation

A block diagram of the system under study is shown in Figure 1. The system consists of the human operator, a switching network, and a servomotor. One control site is permanently coupled through an independent channel to a servomotor and controls one dimension of movement in two degress of freedom. The operator controls the switching network by generating a force, e, against an electromechanical muscle transducer.

The switching network consists of a modified "bang-bang" switch as shown in Figure 1. The operator discriminates between output forces so as to produce one of three force levels, as shown in Figure 1. The force levels of $e<o$, $0<e<a$, and $a<e$ result in zero, positive step, or negative step inputs, respectively, to the system.

Assuming that the transfer function of the arm servomotor can be compensated so that an ideal second order system of the form $\frac{k}{S^2}$ results, a signal applied to the switching network will result in a linear change in velocity over time with slope $\pm K$. In the process of controlling movement the operator can choose to accelerate or decelerate the servomotor. To obtain an optimum time trajectory of movement, the operator must reverse the polarity of the output of the coupling network by changing the level of his applied force at the midpoint of his movement. For example, suppose the operator wished to move the end-point of the arm in a certain direction between two points with one-dimensional movement. He would generate a muscle force $a<e$ to produce a positive acceleration, K. At the midrange of movement he would reduce his force level so that $0<e<a$, producing a deceleration, $-K$. If he had succeeded in switching at the right time, the end-point of the arm would reach the target location with zero velocity. The trajectory of such a movement is shown in Figure 2. It is the optimum trajectory for minimal time control of an ideal second order "bang-bang" switching system and is identical to the trajectory of the normal

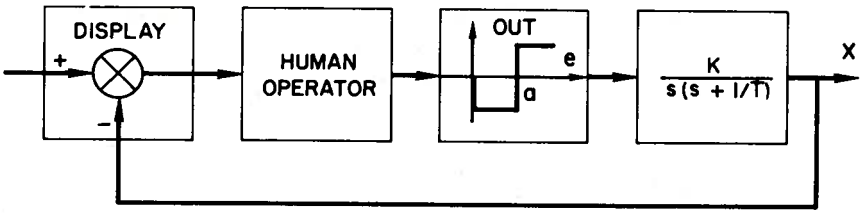

FIGURE 1.—The "bang-bang" control loop.

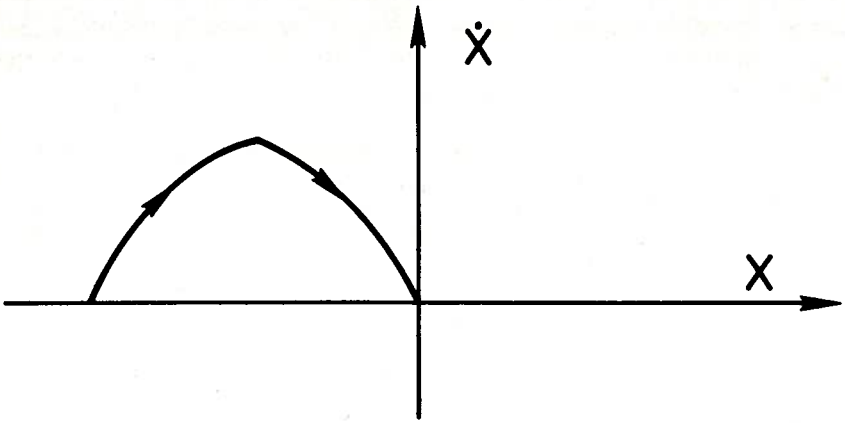

FIGURE 2.—Movement trajectory of the "bang-bang" control system.

human arm (Freedy, et al., 1967). Carrying the example to the case of three-dimensional movement the operator would act in the same fashion adding the vector components of each dimensional movement to produce an optimum three-dimensional vector trajectory.

System Stability and Optimization

The transfer function of one channel of the "bang-bang" control system can be written as

$$\frac{C(S)}{R(S)}=\frac{H(s)G(s)K_{eq}}{1+H(s)G(s)K_{eq}}$$

where K_{eq} is the describing function of the switching network. From the transfer function of the system, the closed loop characteristic equation can be written as:

$$1+H(s)G(s)K_{eq}=0$$

or

$$H(s)G(s)=-\frac{1}{K_{eq}}.$$

The plant, $G(s)$, has the form $\frac{Km}{s\left(s+\frac{1}{T}\right)}$, where Km and $\frac{1}{T}$ are the functions of the servomotor characteristics and the movement of inertia of the load. For a large T the optimum trajectory for a minimal time terminal control is shown in Figure 2. It consists of an acceleration up to the midrange of the movement and then deceleration (Gibson, 1963).

The time required to reach a terminal state can be written as (Freedy, 1967):

$$t=\frac{4}{\sqrt{K}}\sqrt{X_f-X_o}$$

where K is the overall system gain, and X_o and X_f are the initial and final positions. Completion time is inversely proportional to the square root of gain. For minimal time control, gain should be as high as possible. To determine the highest permissible value of gain at which stable operation can be obtained, a stability analysis of the system should be performed.

Two problems arise in the attempt to analyze the "bang-bang" system for stability. First, the transfer function of the operator is not available. As noted by McRuer and Ashkenas (1962) the adaptive characteristics of the human operator are a function of the process he controls. Experimental procedures are required to determine these characteristics. Second, the system is nonautonomous. The switching network of the system can be represented by an ideal relay in series with a summing stage to which a step input is applied. Thus, the system is nonlinear and cannot be reduced to an autonomous system. Therefore, it cannot be analyzed for stability by the "describing function technique" (Gibson, 1963).

When an analytical solution is not possible in control system analysis, a solution may be accomplished by analog or digital computer simulation. In the simulation analysis of a physical system, gain is varied to determine that range of gain settings for which the system is stable. For the simulation analysis of a system controlled by a human, the range of system stability is more difficult to determine, since stability is not only a function of gain but also of the operator's transfer function. As noted above, the transfer function varies in an unknown manner with level of experience and skill of the operator. Therefore, an adaptive gain adjustment system was designed and simulated to allow experimental determination of the range of stable operation.

THE ADAPTIVE SYSTEM

The Adaptive System Concept

By definition, a system which adjusts its own parameters for optimum performance may be called adaptive (Mishkin and Braun, 1961). In the present case application of an adaptive subsystem to a human-operated plant is represented in Figure 3. The subsystem records the performance of the plant and adjusts parameters of the overall system up or down according to a given criterion of performance.

In the present case performance is measured in terms of integrated error. Error is measured as the size of the integrated overshoots and undershoots that occur before a terminal state is reached. Integrated error, E, can be expressed mathematically as:

$$E=\int_{t_o}^{t_f} |X_f-X|dt,$$

where t_o is the time at which the error started, t_f is the time when a terminal state is reached, and X_f is the terminal state.

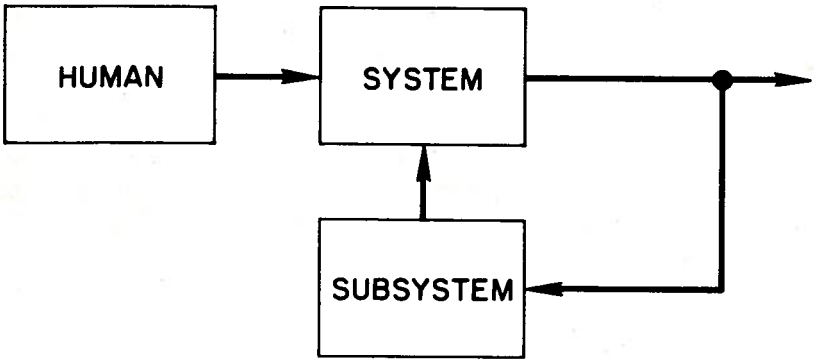

FIGURE 3.—Adaptive system concept.

The performance level of the operator of a system will principally be a function of his skill and system gain. At low skill levels, that is, with an untrained operator, system gain must be kept low to keep error scores low. With practice, operator skill will increase and gain can be correspondingly increased without degrading performance. The highest permissible gain level for operation with minimum error can be determined only after the operator has become thoroughly experienced in system operation.

Under this philosophy, an adaptive gain adjustment system would be set so as to increase system gain whenever a low error score occurs, indicating that operator skill is adequate for the current level of gain. Whenever error scores are high, implying either that gain is too high or that the operator has not yet acquired the necessary skill to operate at such a gain level, gain would be adjusted downward to permit the operator to acquire additional skill at a lower level of task difficulty. Moderate error scores would imply that the task was neither too easy nor too difficult for the operator at his present level of skill and that no gain adjustment should be made.

Physically, the gain adjustment subsystem can operate according to a preset gain adjustment program as shown in Figure 4. The independent variable in Figure 4 is integrated error, E. The dependent variable is the change in gain to be introduced after a single operational trial.

For trials on which performance falls in the region of low error, $0<E<a$, a unit increment in gain will be introduced. For trials in the medium error region, $a<E<b$, no gain changes will be introduced. For trials in the high error region, $b<E$, a unit decrease in gain will be introduced. The low, medium, and high error regions can be chosen according to performance criteria of interest.

Realization of the Adaptive System

A "bang-bang" control network with an adaptive gain-adjustment subsystem was constructed. The realized system is shown in Figure 5. The sub-

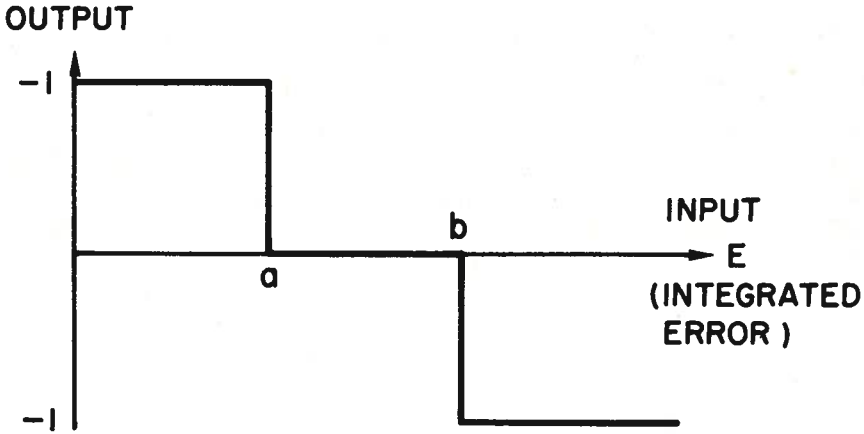

FIGURE 4.—Gain adjustment program.

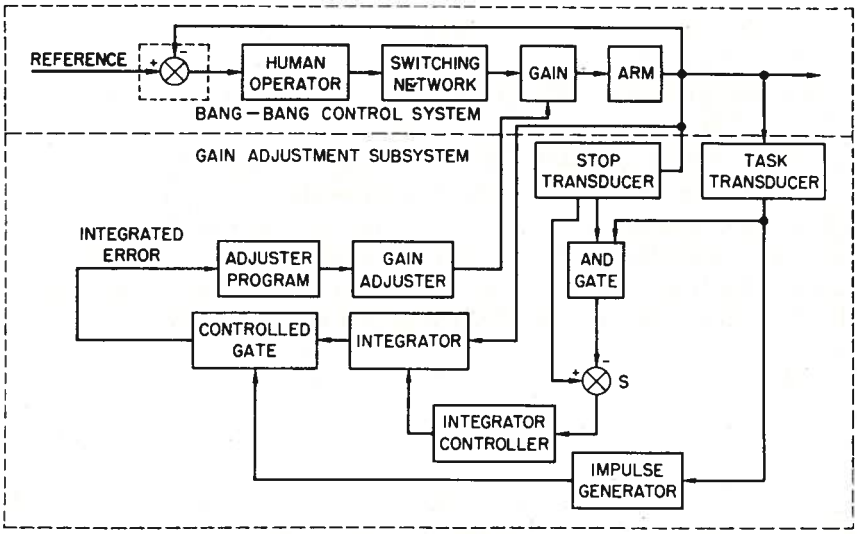

FIGURE 5.—The realized system.

system basically consists of an error sensor, an error integrator, and a gain reset unit. A detailed circuit diagram of the adaptive system is given in the Appendix. The output of the control loop is connected to a task transducer and a stop transducer. The outputs of the two transducers are fed into an AND gate, then to a summing circuit, and then combined with the output of the stop transducer. The stop transducer produces a step output signal whenever the velocity state of the output, X, is zero, while the task transducer produces a step output signal whenever the terminal state, X_f, is the

required one. If the velocity state drops to zero and the task is not completed, a positive step is fed through the summing circuits into the integrator controller which sets the error integrator in operation. Then the difference between the final position and the present position, $|X_f - X|$, is integrated until the operator brings the output to the desired terminal state. At the instant the movement is brought to the terminal state the task completion transducer is triggered and the AND gate is opened. The output of the summing circuit drops to zero and the error integrator operation is terminated. At the same time the step signal from the task transducer closes a controlled gate which feeds the integrated error into the weighting unit or adjuster program for a fixed length of time. The output of the weighting stage, either positive, zero or negative, is applied to the gain adjuster which consists of a servomotor that controls system gain through a potentiometer.

PILOT STUDY

A short experiment was conducted to test the adaptive system. One-dimensional arm movement was simulated as an ideal second order system on an analog computer. The position of the arm was displayed as a ¼ in. dot on a 14 in. by 14 in. CRT screen. Four subjects were trained to position the dot between two points on the screen while system gain was held constant.

Next, a series of testing sessions was conducted in which the adaptive gain subsystem adjusted the gain of the control system automatically after each trial depending on the observed level of integrated error. Figure 6 presents the level of gain over 120 trials for a single subject. Inspection of the figure shows that the gain level saturated after 100 trials. This implies

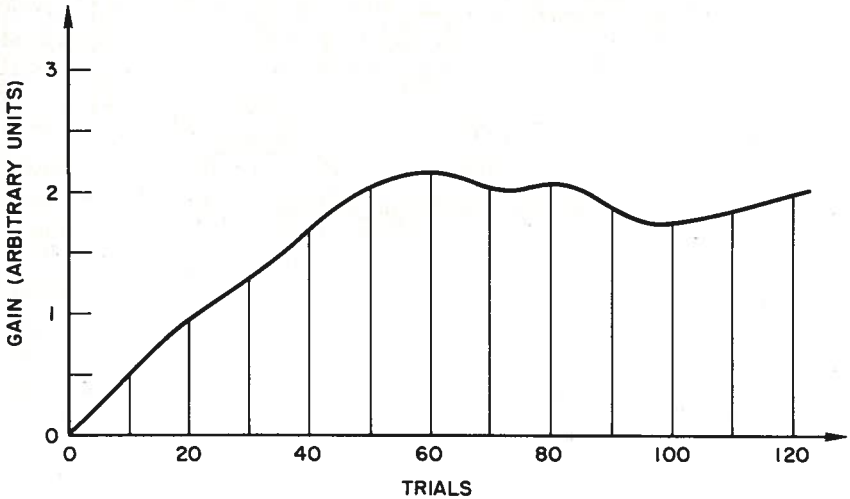

FIGURE 6.—Change in gain over trials.

that the operator reached his physical response limits and could not improve performance. Results were very similar for the other subjects.

Figure 7 represents the rate of change in gain as a function of gain, based on averages calculated from the data shown in Figure 6. The figure shows that beyond a gain level of 1 (arbitrary units) a decrease in the rate of improvement (or increase in gain) occurs. At a gain of 2 the rate of change of gain has dropped to zero, implying that the system has reached the highest permissible gain for adequate operation under the criterion adopted.

The application of the concept of the adaptive gain-adjusting subsystem is not limited to arm prostheses alone. Its unique feature of gain adjustment as a function of operator performance can be utilized in a wide variety of closed loop systems where the human operator acts as the controller. In such systems maximum permissible gain for system stability is limited by the operator's skill as well as by his dynamic response as a servocomponent. Use of an adaptive gain-adjustment subsystem permits acquisition of skill at the proper gain levels. Only after skill has improved will system gain rise. System gain will not saturate until asymptotic operator performance limits are reached. The primary advantage of such a system is that it permits training and selection of optimum system gain to proceed together in time, resulting in a more efficient total system.

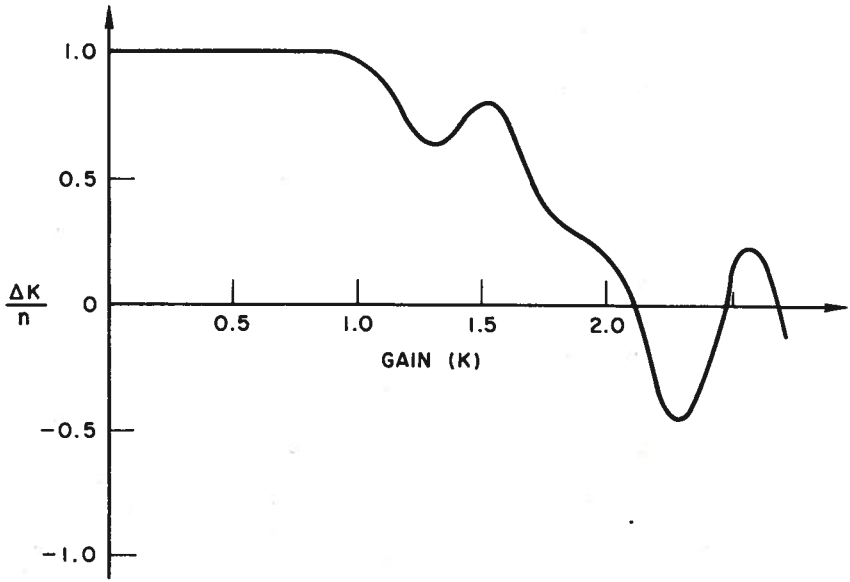

FIGURE 7.—The rate of change of gain as a function of absolute gain.

ACKNOWLEDGMENTS

The authors acknowledge the assistance of Meir Boyarsky in constructing the system and of Dr. Horst Arp in reviewing the manuscript.

REFERENCES

1. Freedy, A.: Information Theory Approach to the Control of Externally-Powered Artificial Limbs. M. S. Thesis, University of California, Los Angeles, 1967.
2. Freedy, A., L.F. Lucaccini, and J. Lyman: Information and Control Analysis of Externally-Powered Artificial Arm Systems. Technical Report No. 67–44, Department of Engineering, University of California, Los Angeles, 1967. (Reprinted elsewhere in this issue.)
3. Gibson, J.W.: Nonlinear Automatic Control. McGraw-Hill, New York, 1963.
4. McRuer, D.T. and I.L. Ashkenas: Design Implications of the Human Transfer Function. Aerospace Engineering, Sept. 1962.
5. Mishkin, E. and L. Braun, Jr.: Adaptive Control Systems. McGraw-Hill, New York, 1961.

APPENDIX

SUPPLEMENT TO CIRCUIT DIAGRAM

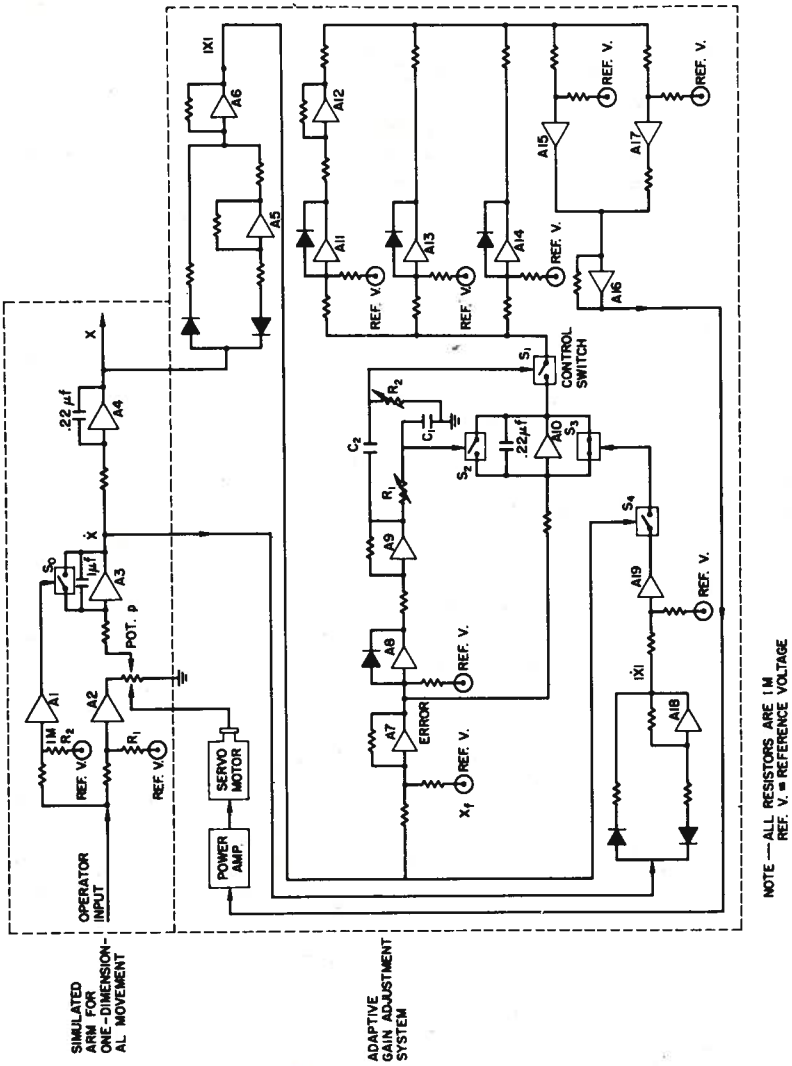

FIGURE 8.—Circuit diagram.

The system circuit diagram consists of two basic subsystems: the simulated arm and the adaptive gain adjustment system. Operational amplifiers A1, A2, A3, and A4 constitute a simulated "bang-bang" controlled servomotor. Both the position vector, X, and the velocity vector, $\dot{X}$, constitute the actuating inputs for the adaptive gain-adjustment subsystem. The position and velocity vectors are converted to their absolute value by the circuits of amplifiers A5 and A6 and A18.

Amplifier A7 is used to detect error. The reference voltage at A7 represents the final required position, X_f. It is subtracted from the instantaneous value of position. The error is fed to amplifier A8 which generates a step voltage when the error reaches zero. The error is also fed into the error integrator A10 which is controlled by the circuits of A19 and A9, through control switches S_2, S_3, and S_4. The contacts of the controlled switch S_4 are set to close when $0 < |X|$.

The contacts of control switch S_3 are normally closed and that of S_2 are normally open. When the velocity vector drops down to zero, amplifier A19 generates a step which opens the contacts of switch S_3. (This process is irreversible until the next trial.) At that instant the integrator starts to integrate the error. When $|X_f - X_o|$ reaches zero, amplifier A8 generates a step voltage to activate switches S_2 and S_1. The input to S_2 lags the input to S_1. The length of time that the contacts of S_1 are closed depends on the values of R_2C_2. The values of R_1C_1 were set such that S_2 closes after S_1 opens.

During the interval that S_2 is closed, the final value of the integrated error is fed to the gain-adjustment program circuit, A11, A12, A13, A14, A15, and A17. The reference voltages of these amplifiers determine the gain-adjustment program. The output of the program, a positive or negative pulse of a fixed duration, is fed to a power amplifier. It drives a servomotor which adjusts the gain through potentiometer, P.