A REVIEW OF THE VETERANS ADMINISTRATION BLIND GUIDANCE DEVICE PROJECT

J. Malvern Benjamin, Jr., M.S.E.E.

President, Bionic Instruments, Inc.
221 Rock Hill Road
Bala-Cynwyd, Pa. 19004

INTRODUCTION

Despite the excellence both of the long cane and of the dog, when used by trained people, relatively small fractions of the totally blind population use either. While these proportions are likely to increase with the current development of rehabilitation centers specializing in mobility training, there appears also to be some demand for a device which would not interfere with other pedestrians by physical contact, would be relatively inconspicuous [a] and would permit operation in crowded and noisy environments where auditory cues are absent or useless.

Any mechanical method for detecting hazards during travel by the blind should fulfill at least three functions:

1. It should detect obstacles and roughly indicate their proximity. Large obstacles such as walls are rather easily detectable by auditory cueing, if the blind traveler is experienced and has good hearing. However, obstacles such as chairs, posts, awnings, lamp posts, fire hydrants, projecting mail boxes, trash cans, mesh trash receptacles, projecting doorsteps, and doors standing ajar cause considerable discomfiture to the unaided blind traveler. A special difficulty posed in traveling over familiar ground is the appearance of unexpected obstacles such as movable trash cans, children's toys, or pedestrians.

2. It should detect down-steps and holes. These may take the form of downward curbs, down-going flights of stairs, edges of train platforms, docks, open manholes, and cellarways. A relatively unexpected hole, such as an open manhole, usually has some form of guard for the protection of sighted careless perestrians. On the other hand, a down-curb, a flight of stairs, or a sudden increase in the steepness of a hill poses special problems.

3. It should detect up-steps and low obstacles as exemplified by upward curbs, low steps, and similar stumbling blocks which may well be too small to be detected by other methods used primarily for detecting walls and doors.

---

[a] Some blind persons prefer an indicator of blindness comparable to the white cane or the dog as a warning to motorists.

Some blind individuals would also like a travel aid to help them walk in a straight line and to give compass bearings. A magnetic compass has been adapted to this purpose by Jacobson (1), while Swail has used the directional attributes of a radio antenna to make a direction and straight line sensing device. Though these devices function satisfactorily, they seem to be too cumbersome for the amount of information that they supply, so that they have not become popular.

From a mechanical point of view the instrument should be small, light in weight, easily stored when not in use, and easily picked up and put down. An instrument for the use of which someone must get "dressed up," with wires running through shirt sleeves and lenses mounted on a hat or the toe of a shoe, is so cumbersome that few blind people would consider the aid to be worth the trouble. Furthermore, it should be quiet in operation and not present any signal to the user except when encountering an obstacle. The signal that is then presented to the user should, if possible, be tactile rather than audible, because the blind traveler would like to reserve his ears for naturally occurring auditory cues.

This paper will review the numerous principles and devices suggested to meet these requirements, trace the history of our project, and describe the Bionic C4 Laser Cane currently being built for clinical application studies under the auspices of the Veterans Administration.

DEVICES SUGGESTED AND TRIED

Altogether about 25 guidance devices working on a variety of principles have been built by many investigators under various sponsorships in the last 20 years. The devices and the thinking behind their development are described in varying details in the publications listed in the bibliography. Broadest coverage can be found in "Blindness" (2) and, more recently, in "Proceedings of the International Congress on Technology and Blindness" (3), while others (4, 5) contain quite comprehensive bibliographies.

A few devices have operated from ambient light reflected by the obstacle, but most have radiated a beam of sound or electromagnetic radiation and detected the reflected ray. In most cases range information is elicited as well as information regarding the presence or absence of the obstacle.

Historically, most investigators have considered the detection of substantial obstacles, such as walls or doors, as their principal goal. Gradually, with increasing study of the problem, they have realized the importance of step-down detection also, obviously considerably more difficult than the detection of large conventional obstacles. In addition, they have recognized the less serious step-up detection problem, which, while superficially related to the obstacle detection problem, is, indeed, of a further order of difficulty.

Most recently, the problem of head height obstacles has also been considered.

Most devices have been designed simply to alert the user to the presence or absence of an obstacle, though some also attempt to give information regarding the texture of the objects sensed. Of course, the more information that is displayed, the more user training is required.

Throughout the development of these devices, the greatest emphasis has been upon systems by which an otherwise able-bodied individual, lacking only vision, could find his way about safely at a reasonable walking speed of 3 or 4 miles per hour. The individual's reaction time, stumble recovery, and general physical condition are expected to be normal or perhaps even somewhat above average.

Sonic Devices

Reflection of sound forms the most versatile source of travel information available to the blind. Supplementing other ambient sound, sound from the tap of a cane or the scuff of a foot reflected from an obstacle, will announce its presence to the acutely perceptive blind person. But the newly blind traveler, or the experienced man in a noisy street will find these echoes too faint. To overcome these problems several workers have developed small, easily carried horns that generate high frequency sound in sharp bursts to augment the more naturally occurring but less intense sound usually employed. Twersky (6) and Witcher (7) each produced useful instruments of this type. At first glance this might seem to be a very desirable system, since it employs the natural faculties of the user to a maximum. However, this is not a satisfactory solution, as it is not possible to obtain a sufficiently narrow beam for frequencies in the audible range. The highest frequency that seems practical is 10 kHz. If it were to be higher than that, too many people would not be able to hear the reflections. At 10 kHz the beam width is so wide that too much reflection from the ground confuses the pattern. It works under ideal conditions, but not under actual operating conditions. It also makes enough noise to be an "attention getter." However, it is probably a useful teaching aid.

Ultrasonic Devices

Until a few years ago, ultrasonics did not seem to be a very promising approach. There are several factors against its use and only one in its favor. On the positive side, the speed of transmission of ultrasonic waves makes it possible to employ time of flight (sonar) ranging principles. This is not yet practicable with electromagnetic waves, since the distances are short and the speed of transmission is quite high. About 25 years ago the Hoover Company and the Brush Development Company each built an ultrasonic device, while Stromberg Carlson tried several ultrasonic systems employing simple time lapse, single and multiple echo, and frequency modulation (8, 9). None of these proved to be satisfactory. Thermal and convection currents in the air introduced refraction effects that quite frequently completely obliter-

ated signals. One blind evaluator (T. A. Benham) vividly recalls standing still while observing a tree trunk about 10 ft. away and noticing that the tree would seem to come and go in a most disconcerting manner.

More recently, Leslie Kay has tried again and produced a successful instrument (10). Using wide-band transducers, the instrument transmits a signal whose frequency varies with time between 30 kHz and 60 kHz. The signal returned from an object is mixed with the then outgoing signal to produce an audio beatnote whose pitch varies with range. If the surface of the object is rough or intermittent, like the foliage of trees or stalks of grass in a lawn, the signal will have several frequency components, giving it a "rough" sound as compared to the much purer tone generated by a smooth wall. Furthermore, the loudness will depend on the sound reflectivity or "hardness" of the surface. Thus, the instrument will give a rich information return. The device has been evaluated and reported on in this country (11, 12) [b] and is currently undergoing further evaluation in England and in Sweden.

Lindsay Russell of MIT has also developed an ultrasonic device which is worn on the chest, with a strap around the neck. A small earpiece warns of an obstacle in the path. This device is much easier to learn to use than the Kay device and it is less encumbering; but, of course, it does not produce as much information.

UHF Devices

Another possible approach which is frequently suggested is the use of radar. In general, a true radar system would presently be too heavy for portable use and unsuited to the very short ranges involved in a practical device for the blind. However, one system that has been suggested comprises a 1/4 wave antenna which changes the frequency of a high frequency oscillator when it nears an obstacle. This is the principle used in the proximity fuse.

Recently, with the advent of the Gunn Effect diode oscillator, a miniature laser-type guidance radar has been attempted. However, it does not measure range, but speed of approach (13).

In another approach, the Franklin Institute, on a grant from the Kellogg Foundation, developed a cane (14) using UHF which senses capacitively the distance between the tip of the cane and the ground or other obstacles. With this device the user has essentially the protection of a normal, reasonably long cane, but usually does not have to touch the ground physically. He is able to carry the tip of the cane a few inches off the ground without receiving any tactile or audible signal. If the tip then passes over the edge of a down-curb, the distance to the ground suddenly increases, the capac-

[b] Another evaluation, "Short Term Field Evaluation of Type 8A9 Ultrasonic Aid for the Blind," appears elsewhere in this issue.

itance between the end of the cane and the ground changes abruptly, and a signal is given. This approach has the disadvantage that the detection range is limited to only a few inches more than the length of the cane; thus it cannot provide early warning.

A similar type of electronic cane was later developed by August W. McCollum of SITE Inc. (Sight Implementation Through Electronics).

Passive Systems Using Light

It is possible to build a system that detects an object by means of reflected ambient light. Such a "passive" system has the advantage of saving the power, weight, and space required by an "active" system that carries its own light source. One extremely ingenious and well engineered instrument was called "Optar" (15). This device detected ambient light reflected from the obstacle and determined the range by automatically measuring the image distance, the distance behind a lens at which an obstacle would be in sharp focus. Information was presented as a tone, the pitch of which indicated distance. In practice the tone was complex and difficult to interpret, and the device in the form in which it was constructed was not capable of detecting down-curbs.

Our laboratory studied the possibility of finding objects by detecting the contrast between adjacent areas of differing reflectivity. The system required too much ambient light to be practical for any but specially selected objects. Ranging was to be accomplished by finding the image distance, as in the Optar system described above.

Active Systems Using Light

A device working in the same part of the spectrum but carrying its own light source was developed by Dr. Lawrence Cranberg, then of the Signal Corps (16). RCA later manufactured 25 experimental units. Figure 1 shows the model of this device manufactured by RCA.

Briefly, the principle of operation is as follows: A beam of light interrupted 500 times per second emanates in a narrow beam from an optical system, strikes an object or the ground, and is diffusely reflected back into the second optical system. This second optical system focuses the image of the spot of light reflected from the object on a coding disk, behind which is located a photoelectric cell. The output of the photoelectric cell is fed through an electronic amplifier tuned to 500 Hz to a vibrator in the handle of the instrument. The coding disk interrupts the reflected light 4, 8, 16, or 32 times per second, depending upon the distance to the object. Thus the rate at which the 500 Hz pulses in the handle are modulated by this lower frequency informs the user as to the distance to an obstacle, while the position of the handle indicates the azimuth: that is, whether the obstacle is to the left, to the right, or straight ahead. Tuning the amplifier to 500 Hz gives the

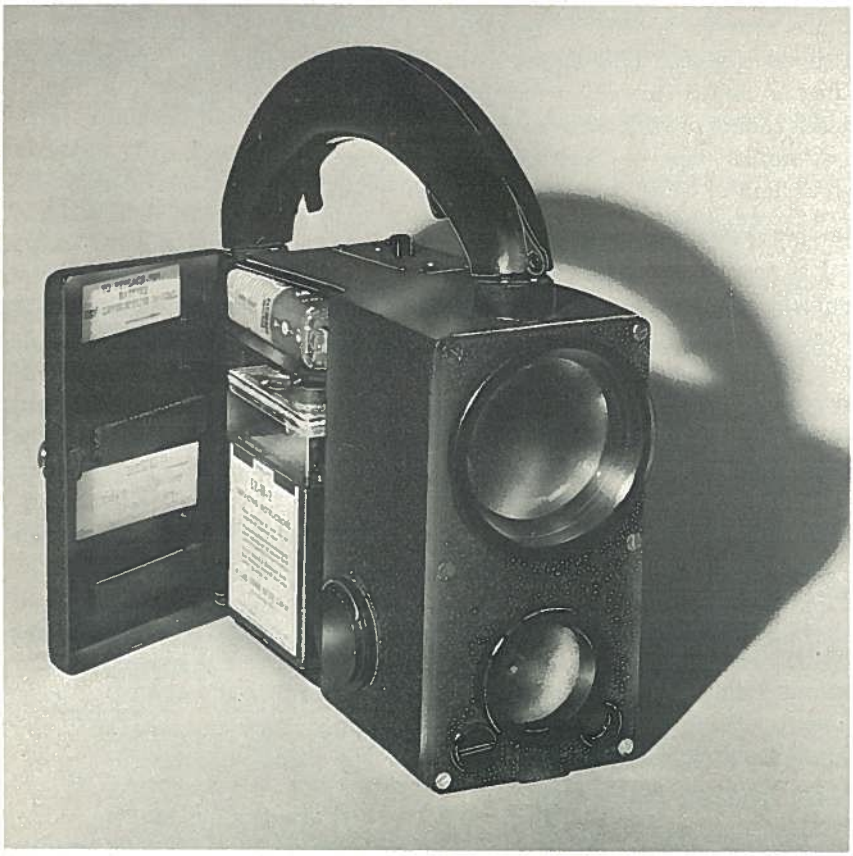

FIGURE 1.—Signal Corps Obstacle Detector manufactured by RCA.

system a favorable signal-to-noise ratio and helps discriminate against ambient light and low frequency transients.

Another recent RCA device (17), built on the same basic principle of optical triangulation, makes use of their recently developed room temperature solid state laser. The device is somewhat cane-like. It sends out two beams of light at different angles which return reflections from the ground at approximately 3 ft. and 6 ft. in front of the device. Interruption of a beam is signaled by interruption of the appropriate finger stimulator pulses. If both stimulators go dead, the ground has disappeared altogether, while interruption of one stimulator indicates a curb or step. The present device is a study model, and it is not presently known if RCA is planning further work.

Another optical triangulating device using visible light was built by the late Dr. Clifford M. Witcher at the Massachusetts Institute of Technology. He gave considerable time and thought to the overall problem of obstacle

detection; to the special aspects of auditory localization, including the presentation of information in a map-like display (extending the work of Sokal (18)); and to the detection of step-downs or curbs. For this last problem he developed a test model of a device intended to be fitted in a briefcase, which projected a beam of light obliquely forward and downward upon the ground and then scanned this beam back and forth along the ground, nearer to and farther from the user. The beam was projected through the lower of two lenses, while a photocell was placed behind the upper lens. So long as the spot was on level or uniformly sloping ground, the optical system received a solid uninterrupted spot of light. If, however, the beam of light projected over the edge of a curb, there was a momentary interruption in the spot because the curb cast a shadow. While there seemed to be some difficulty in keeping the optical systems in focus over the rather wide range of distance involved, a ratio of about two to one, this difficulty could probably have been overcome by adding an automatic focusing arrangement coordinated with the scanning of the spot back and forth. Dr. Witcher's untimely death prevented further development of this concept.

Ultraviolet Device

Under the Committee on Sensory Devices, the Franklin Institute Laboratories for Research and Development worked on an optical triangulation ranging system using ultraviolet light. Ultimately the basic idea was given up because it was not as realizable as the Signal Corps device, also employing the principle of optical triangulation.

BIONIC INSTRUMENTS, INC.: EARLY DEVICES

The RCA version of the Signal Corps device described above was evaluated by Professor Benham in 1950, and his evaluation report (19) contained a list of recommendations which became the specifications for the series of instruments developed by our laboratory.

In 1953 the Veterans Administration contracted with Haverford College to develop, under the direction of Professor T. A. Benham, an improved version of the Signal Corps device embodying, wherever that might be practical, the desired features enumerated in the Haverford Evaluation Report. Haverford College subcontracted the laboratory development to Biophysical Instruments, Inc. (now Bionic Instruments, Inc.), leaving the evaluation to be performed by Haverford directly. The rest of this paper reports the thinking, design philosophy, and hardware that have flowed from this assignment.

Ranging by Triangulation

The optical principle of range determination by triangulation used in the guidance device may be explained by reference to Figure 2. A beam of light sent out by a source lamp is focused by the source lens on an obstacle which

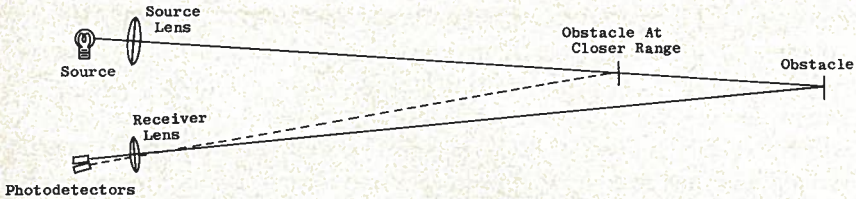

Triangulation principle used in obstacle detectors. A light source is focused by a source lens on an obstacle. Two obstacles are shown at different ranges. Some rays from the image of the source appearing on the obstacle are focused by the receiving lens onto a photosensitive receiver. Obstacles at different distances reflect light to different receivers to discriminate range.

FIGURE 2.—Triangulation principle used in Signal Corps and Bionic guidance devices.

may be at any distance within the range of the obstacle detector. Two arbitrary positions for the obstacle are shown. Specular or mirror-type reflections from these obstacles generally will not return light to the receiving lens, because the angle of return of the reflected ray will depend on the angle that the reflecting surface of the obstacle makes with the central source ray. However, unless the obstacle has a very shiny surface, a small amount of light will be reflected from it in all directions (diffuse reflection). Regardless of the position or the angulation of the obstacle, there will thus exist a pencil of rays that will run through the center of the receiver lens to form an image as shown in the figure. Thus the location of the image with respect to the lens axis will be a measure of the distance to the obstacle. Note that in this system range determination is independent of the optical characteristics of the obstacle so long as enough light can be diffusely reflected to be electrically detectable. Most vertical objects, even black objects, will diffusely reflect enough light to be detected. However, mirrors, clear glass, and oblique or horizontal surfaces that are very dark or very shiny will cause trouble.

The obstacle detector is only required to discriminate range crudely. In fact, the first two models were built with no ranging discrimination at all. However, limited field tests with these models indicated that some range discrimination was desirable.

Early Models

At the beginning of the project the problem of curb detection was separated from that of obstacle detection, because the former was more difficult than the latter, and we couldn't even do the latter! Several generations of obstacle detectors were developed, culminating in the three range detector, Model G5 (3), shown in Figure 3 and the much smaller nonranging "flashlight" shown in Figure 4.

The G5 had a short range of 5 ft., a medium range of 10 ft., and a far range of 35 ft. An obstacle was signaled tactually by a stimulator in the

FIGURE 3.—Bionic G5 Obstacle Detector.

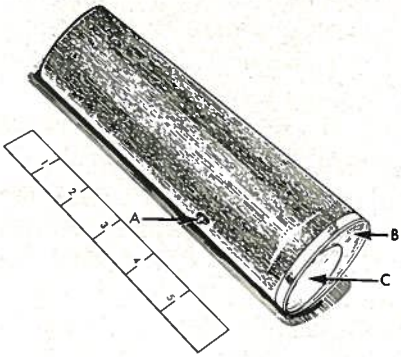

FIGURE 4.—Bionic Nonranging "Flashlight" Obstacle Detector: A. tactile stimulator, B. receive lens, and C. transmit lens.

handle. The instrument was rather inconspicuous and quite rugged. It weighed about 2 lb., complete with rechargeable batteries.

Approximately 15 units were built and evaluated for use on level ground by Tracor (20) in 1965. Tracor trained a group of blind travelers in "mazes," on a street, and in a store. It was concluded that the instrument increased the speed of the otherwise unaided traveler and that the users made about the same number of errors as with conventional devices. However, it actually slowed down the cane or dog user. It seemed that the user, upon encountering an obstacle, would frequently stop to explore in more detail, thus slowing down his travel but increasing his knowledge of his environment. Whether this kind of performance is considered "good" or "bad" depends on the desires of the user.[c] Further, it was determined that the absence of hole detection was quite a serious lack, though the device had been designed only for obstacle detection. It was so serious, in fact, that most travelers felt quite insecure unless they could also carry a cane in their other hand to probe for stepdowns. A few devices were fitted with downward probing automobile antennas, but the antennas were unacceptably flexible. Under these conditions, the device became an added encumbrance that was more trouble than it was worth.

These tests clearly showed, then, that it would be highly desirable to incorporate the guidance device into the body of a cane so that the user would have only one device to carry, and further, that it was quite important to incorporate a stepdown detector if at all possible.

Fortunately, at just about this time solid state infrared generators began to be developed. As with many of our previous instruments, the first one was built around a component that was not yet commercially available. It took the form of the nonranging "flashlight" shown in Figure 4. By the time the rest of it was finished the light generator it needed was on the market. Though it was small and light in weight, this "flashlight" had a maximum range of only 6 ft.; so it was useful primarily as a study model.

We next attempted a three channel cane. This cane (see Fig. 5), like the "flashlight" that preceded it, demonstrated that technology now made possible the compression of many components into what had been considered heretofore an unrealistically small space. The use of integrated circuits, small Fresnel lenses, and a solid state (gallium arsenide) light source made that compression possible.

The cane incorporated three complete detectors. In addition to a detector that looked straight ahead, an upward looking one provided coverage of the head and shoulder region, while a downward looking one gave warning of large dropoffs. Like its predecessor, the "flashlight," it was quite insensitive because of the low output of the light source. Furthermore, its human

[c] Later trials showed that when subjects were encouraged to speed up and use the device only to look for a clear path they were able to do so.

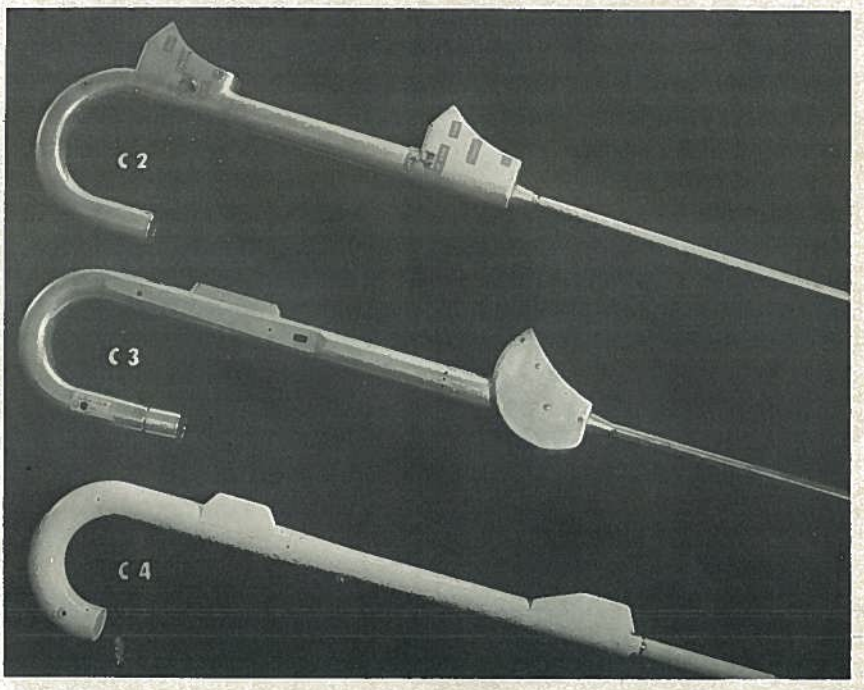

FIGURE 5.—C2, C3, and C4 Bionic Canes.

engineering was quite poor because major emphasis had been on technology. The weight and balance were bad, switches were located in unmanageable places, and the tactile output signals were almost unusable. However, it did allow a test of the idea of a beam to protect the upper body, heretofore untried.

Just about the time that this cane was completed, technology took another leap forward. There became available a light source made of the same gallium arsenide, but so doped and fabricated that it was a true laser at room temperature. Now, with almost 1,000 times more light available, it was finally possible to build a cane that would have the power required to work at realistically useful distances.[d] Furthermore, with the batteries made lighter, it became reasonable to look into a wide variety of materials in order to make the rest of the cane lighter.

So, in 1966, the first true laser cane built by us was completed (21). It is also shown in Figure 5. It was informally evaluated by over 50 blind travelers and trainers of the blind, and as a result of that evaluation the present model, the C4, was developed. It is shown in use in Figure 6 and next to the C2 and C3 models in Figure 5.

[d] The laser used in this application has at least 100 times less power than would be required to cause eye damage if the laser light were focused directly on the retina.

FIGURE 6.—C4 Laser Cane in use.

THE BIONIC C4 CANE

General Description

The functioning of the cane can be understood by reference to Figure 7. The end of the crook contains a sound generator used for warning of dropoffs and overhangs. The curved portion of the crook houses the electronics to drive the sound generator and the batteries that power the whole system. Proceeding down the front of the cane, at the top is the circuitry that drives the three lasers that generate the three separate light probes

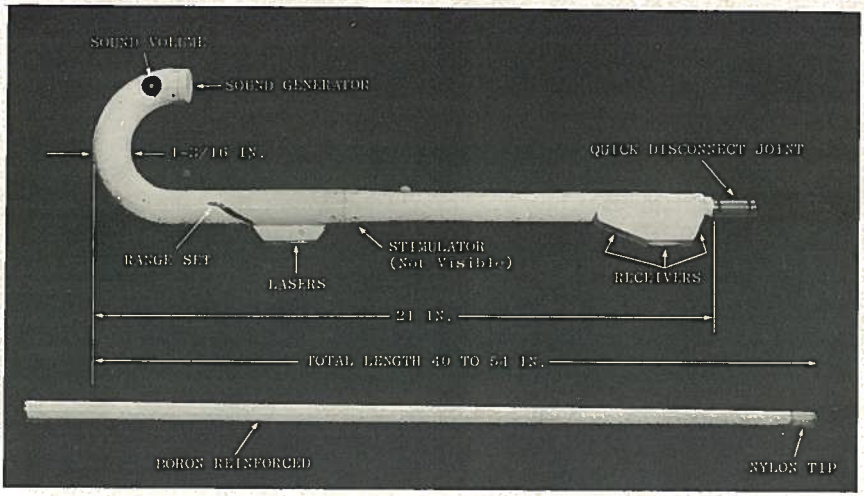

FIGURE 7.—Close-up of C4 Laser Cane.

which look down, ahead, and up. Next come the lasers themselves, situated behind the lens system. This assembly forms the upper nacelle. Above this nacelle is a small lever that can be moved to adjust the maximum range of the straight ahead channel. The housing is broken again 9 in. below the bottom of the upper nacelle by the start of the larger lower nacelle, which houses the receiving optics. The space within the cane between these two optical housings is occupied by receiving and logic electronics as well as a poking-type stimulator. This stimulator is situated on the right side of the cane shaft between the two nacelles in a position to contact the ball of the index finger when the cane is being carried in the right hand as a "long cane." It signals the detection of an object in the field of the straight ahead channel.

The strength of this stimulus has been made independent of the strength of the light reflection from the object, since such information was considered to be more confusing than helpful.

The other two channels, however, were arranged to give an auditory output for several reasons. One stimulator could conceivably be used with three coded stimulator pulse patterns, but the time required to interpret such coded bursts was considered to be too long. Three separate stimulators could be used, but besides taking additional space and power, this solution would require a more rigid hand posture that was judged to be too tiring. Finally, it was postulated, and later confirmed, that brief auditory tones would be better "attention getters" than a tactile stimulus. This would seem desirable for the dropoff and overhang channels, whose warning of difficulties really ought to be strident.

Since these two channels emit signals only occasionally, it was considered that the auditory signal would not be objectionable. The upward looking channel has been set to emit a high pitched tone (about 2200 Hz); the downward looking channel emits a lower pitch (1200 Hz); while if the two channels go off simultaneously, an intermediate tone is produced. The sound generator is a piezoelectric crystal mounted in the end of the crook. A control allows the user to adjust the volume so as to produce a signal loud enough to overcome ambient noise without attracting undue attention.

Stimulator

It was decided that the best way to signal the presence of an obstacle to the user was through a tactile stimulator in the handle of the obstacle detector. This mode of communication lends itself to keeping the device simple to use and avoids the necessity of using the complicated harnesses required by electrical or aural stimulation. Aural stimulation for the most frequent signals was ruled out from the very start, because of the desirability of keeping the ears free for normal cues.

To minimize the size and weight of an obstacle detector, considerable design effort has been directed toward minimizing power requirements. Accordingly, an experiment was performed to determine how much power was needed to alert the user reliably. Two modes of tactile stimulator were thought to be possible:

1. A poking stimulus such as would be provided by a small blunt pin activated by a solenoid.
2. A rubbing or scratching stimulus such as that produced by moving a rough surface across a fingertip.

The latter might be more desirable because it would activate more nerve endings and might reduce the tendency to fatigue.

In order to test these two stimuli and to determine the amount of power they required, a special piece of apparatus was built. The device for providing a rubbing stimulus is shown in Figure 8. It consists of a shaft mounted in very low friction bearings and two disks mounted on that shaft. D_1 is a disk against which the shaft of a motor may be touched in order to bring the rotating system up to some predetermined angular speed. D_2 is a large disk on which is located a rough stimulating surface. The finger gains access to this stimulator through a guard in which are drilled "finger" holes. As the disk rotates, the rough surface rubs the finger tip once each revolution. The percentage of the time that the stimulus is presented to the finger during each revolution can be varied from 5 percent to 50 percent by changing the length of the rough surface glued to the side of the disk.

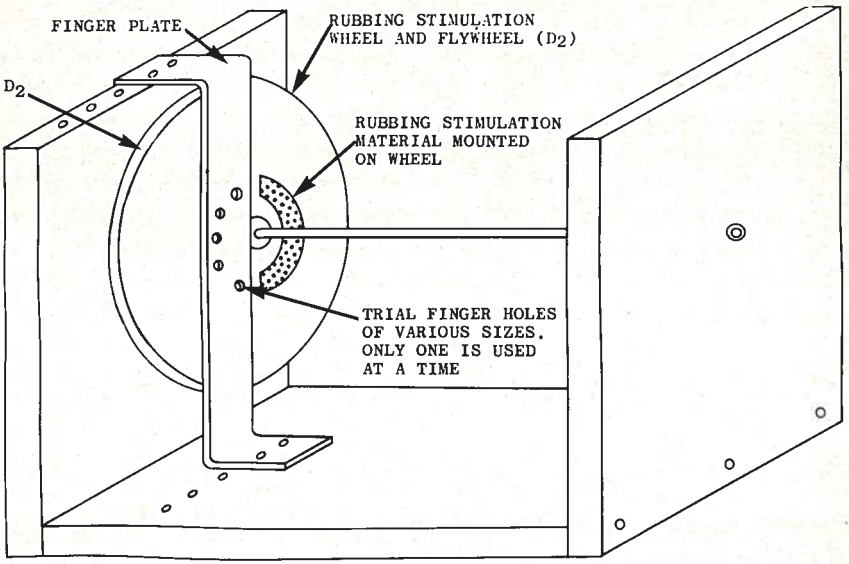

FIGURE 8.—Experimental device for measuring rubbing stimulus power requirements.

Tests with the rubbing stimulus showed that the fingertip fatigued after the first two or three seconds. In the case where 50 percent of the disk was covered with stimulating surface, the power required was about 75 milliwatts.

In an effort to learn what would be required for a poking stimulus, the apparatus was altered as shown in Figure 9. A cam was fitted to a shaft arranged to raise and lower a spring-loaded pin. This pin protruded about $\frac{1}{32}$ in. above the finger plate at the top of the stroke and was about the same distance below the surface of the plate at the bottom of the stroke.

The results indicated clearly that the power required for this type of stimulus was about the same as for the rubbing stimulator. The poking stimulator had the advantage, however, that the finger could be more readily moved slightly from time to time to expose a fresh set of nerve endings to the stimulator. In this way the effects of fatigue could be reduced. Also, from the engineer's point of view it seemed easier to make a poking device than a rubbing device; consequently, it was decided to use a poking stimulator.

The design uses an Alnico magnet approximately half the length of the coil as the moving core of a solenoid. The stationary field of the solenoid is wound with two adjacent coils connected in series opposing so that their poles point the same way with respect to the magnet armature. This arrangement gives maximum force in a limited space. The direction of the electromagnetically powered armature motion is away from the finger to be

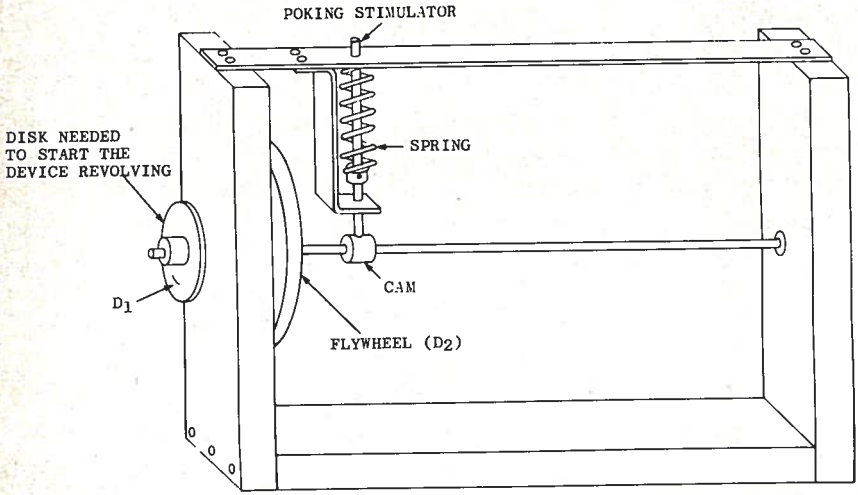

FIGURE 9.—Experimental device for measuring poking stimulus power requirements.

stimulated. In so moving, the armature compresses a spring, which then propels the armature toward the finger when the coil current stops. On the side of the armature toward the finger is glued a small length of piano wire to act as a stimulating element. This wire protrudes through a hole in the side of the cane against which the finger is pressed. The hole is made small enough to keep the finger from touching the wire stimulating element when the armature assembly is at rest. This arrangement allows for maximum energy transfer to the finger and, at the same time, allows for variations in finger pressure against the sensing hole.

Optics

The basic optical principle of range detection, "Optical Triangulation," is described earlier. The sensitivity of such a system to a range change is directly proportional to the distance separating the lenses. Thus the configuration used in the cane is excellent for this ranging system, since it allows several inches of separation between the source lasers mounted in the upper nacelle and the receiver photocells mounted in the lower nacelle. The separation in the present cane is about 9 in. The cane is normally expected to be held in the position of a conventional long cane, about 45 deg., and the optics are set accordingly.

The "straight ahead" optical train consists of the lowest source (upper nacelle) and the center receiving lens (lower nacelle). Maximum range for the system is set by adjusting the angle of the source lens-laser assembly, which is mounted in the nacelle on a pivot so that it may be rotated by sliding the range adjusting lever referred to in the general description and shown in Figure 7. Pushing the lever forward extends the range. The most

forward position corresponds to 12 ft. from the cane tip. The system is capable of sensing up to 18 ft., but most travelers do not find it desirable to observe more than 12 ft. ahead. Pulling the lever back moves the range in; the minimum distance possible is the end of the cane itself. This arrangement allows the traveler to walk in a congested area without receiving more signals than he feels is necessary.

The image formed by the receiver lens will move as the range changes, so the photodiode that responds to this image must be a rectangle with a width equal to the long dimension of the light source and a length equal to the travel of the image as the detected object moves from the cane tip out to the maximum distance set by the laser lens angle.

The laser light is a rectangle approximately 400 microns by 30 microns. Thus, even at 10 feet, when imaged through a lens with a focal length of 13 millimeters, it has only spread to a beam approximately ¾ in. wide and would make an image that long on a receiver diode placed at that point. For this reason it is possible to gage rather accurately the width of an obstacle by a slight rotation of the cane. Figure 10 shows the beam coverages.

This figure also shows the beam coverages for the upward and downward looking beams, neither of which is movable by the user, though they are both adjustable internally to fit the height and stride of the individual user.

The upward going light train is formed by the uppermost source lens and the uppermost receiving lens. It must be the most accurate ranging system of the three because it must protect the head without giving a false alarm for a door jam that may be only 6 in. above the head of the user. It is also adjusted to sense only out to a point perpendicularly above the tip. Earlier experiments showed that sensing beyond this point caused confusion and was unnecessary. If the user is warned of an obstacle at head height just before he is about to hit it, he can easily stop and reach up and out to verify that warning.

The downward looking channel contacts the ground approximately 3 ft. in front of the cane tip, 5½ ft. from the forward foot, in order to provide two steps of warning. So long as any light is returned from the ground, the device is silent. It gives a signal to the user only if the light disappears. An abrupt dropoff of about 7 in. is required, so that the device will not reliably detect small down-curbs or small single steps. There is another mode of operation, however, by which it may be made more sensitive. Frequently there is a change in the color of the terrain between the sidewalk and the street. Usually the street is darker. In such cases the sensitivity of the receiving amplifier may be reduced so that the signal returned from the darker surface of the street, taken in combination with some optical signal loss due to the down-curb itself, will be enough to register as "no return." The present cane contains a gain control that is user adjustable to see if this feature is sufficiently useful to be worthwhile.

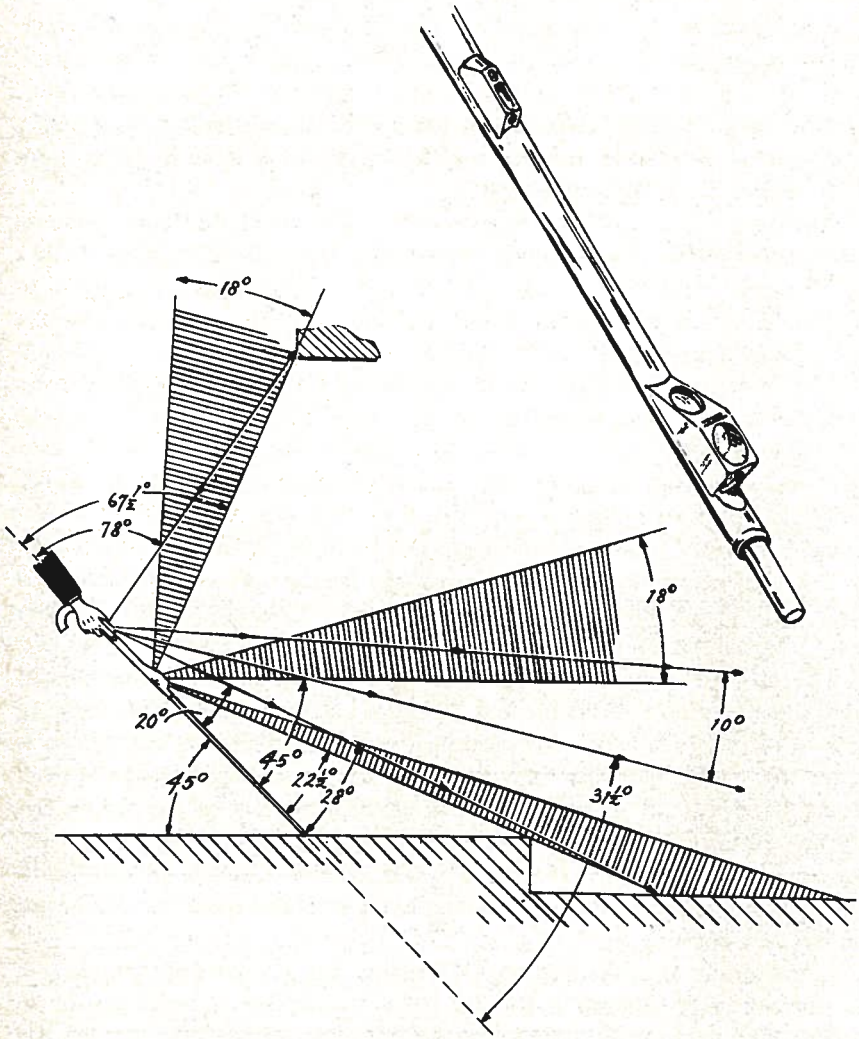

FIGURE 10.—C4 Laser Cane beam coverages.

Light Sources

The original Signal Corps optical triangulation guidance device used a continuously burning incandescent lamp as its light source, the reflection of which by an obstacle was picked up by a lead sulfide photodetector placed in the image plane behind the receiving lens. Major improvements required fast response, high brilliance, small size light sources coupled with high sensitivity, low noise photoreceivers. In terms of brilliance it is hard to better an incandescent lamp, but its response time is so slow that, for the quantities

of light required, a mechanical chopper is necessary that is heavy, possibly noisy, relatively inefficient, and somewhat unreliable. Modulating the light in this way also wastes light power while the lamp is occluded by the chopper. With a 50 percent duty cycle half the lamp power is wasted. Furthermore, if the light can be made to recur in short bursts instead of going on and off in a 50 percent duty cycle, radar system analysis shows that an improvement in signal-to-noise ratio can be anticipated. For equal pulse energies, the improvement is proportional to the reciprocal of the square root of the duty cycle. The foregoing considerations led us to search for pulsed light sources of suitable size, spectral output, and power. Numerous types of low pressure glow discharge lamps were investigated, including Neon, Argon, and Xenon filled types, with crater and rod, dual rod, and flag-type dual rod with auxiliary types of starting electrode constructions. All of the pre-cane devices used such lamps.

As soon as noncoherent, gallium arsenide light emitting diodes became available in 1963, we studied them. While they had a smaller conversion efficiency than the Xenon filled discharge lamp, they also had the clear advantages of smaller size and easier control. Furthermore, we expected that the coherent or lasing gallium arsenide diode would soon be developed to where it could be used at room temperatures instead of requiring liquid nitrogen cooling. Feasibility of this light source was proved by constructing the first three-channel cane discussed above. Thus, when economical solid state room temperature lasers became available, we were fully prepared to take advantage of them. Perhaps their most important single advantage to the project is their extremely small spot size (width) and the consequent possibility of easily producing a well-collimated beam from them, which allows the use of a quite small optical system.

The General Electric Type H1D1 laser is the most powerful unit of its type currently available, so it is the laser used in the C4 cane. Its relatively high energy conversion efficiency, coupled with its fast rise time, allowed us to build a pulse system with a good signal-to-noise ratio and good overall efficiency, because of the extremely small duty cycle of 250,000 to 1 that can be achieved.

Mechanical Design

In approaching the design of the C4 cane, it has been recognized that the blind traveler can travel satisfactorily without an electronic cane. The distant warning features simply make it easier to train the newly blind and make traveling more relaxed for the seasoned traveler. Thus it is necessary that the electronic cane function satisfactorily as a mechanical cane. If it is too heavy, if it reacts in an unaccustomed fashion when used as a probe, or if it looks too peculiar, it will not be used. All of the accumulated experience gleaned from testing of the earlier models by blind travelers was used in doing the human engineering on the C4.

Major attention was focused on trying to achieve low weight and good balance. To this end the whole functional section was constructed of magnesium, and the batteries and other relatively heavy components were mounted in the crook to move the center of gravity up as high as possible. Since the bottom half contained no electronics, it could be made of any material that would help duplicate the "feel" of the conventional long cane. Magnesium was found to be too "springy"; while aluminum was heavier than desirable. Basically the required material should have a high modulus of elasticity to reduce the feeling of "whip"; it should have a low density; and it should have a high ultimate yield point because of the danger of breakage when the cane sticks in a grating or gets caught in a car bumper. The search ended with a new plastic laminate developed for aerospace use. The material is a reinforced epoxy in which each tungsten reinforcing fiber has been coated with a thin layer of boron. The final material has a modulus of elasticity of about 60×10^6, as compared to approximately 15×10^6 for conventional fiber glass reinforced epoxy, 30×10^6 for steel, and 12×10^6 for aluminum in the grade used in present canes and for magnesium in an alloy readily available. It also has a low density in the formulations of interest. The lower section used in the cane is approximately 50 percent lighter and 6 times stiffer than the most suitable magnesium tube. Furthermore it could be made with a taper, which shifted its center of gravity 2 in. above its mid-point, thus helping to raise the overall balance point for the cane.

The cane tip was made of nylon. Experience with the long cane showed this material to have good wear and friction characteristics.

Almost all cane users would like to have a collapsible cane because the 4 to 5 ft. length of the long cane makes it awkward to store under many conditions (e.g.; restaurant, bus, waiting room). However, it is hard to construct a cane that will have several joints, be rugged, weigh little, be quick to assemble, and transmit "sensitivity" from its tip. It was felt that one joint in the center of the cane would be a workable compromise. The O-ring joint shown in Figure 11 turned out to be satisfactory. It was compared to several other designs for durability, lack of play, lightness, and transmission of vibration ("sensitivity").

Electronics

Figure 12 shows a block diagram of the cane electronics.

A ringing choke-type DC-to-DC converter drawing power from the 12-volt battery and operating at an audio frequency charges an energy storage capacitor to about 550 volts in 20 to 25 milliseconds. A spike-producing relaxation oscillator employing the avalanche mode of a transistor, which operates at 40 Hz and is synchronized with the repetitive chargings of the capacitor, is used to trigger a silicon-controlled rectifier that discharges the capacitor through the three lasers in series. The lasers produce coherent light of about 3 to 10 watts of average light output pulse power until the

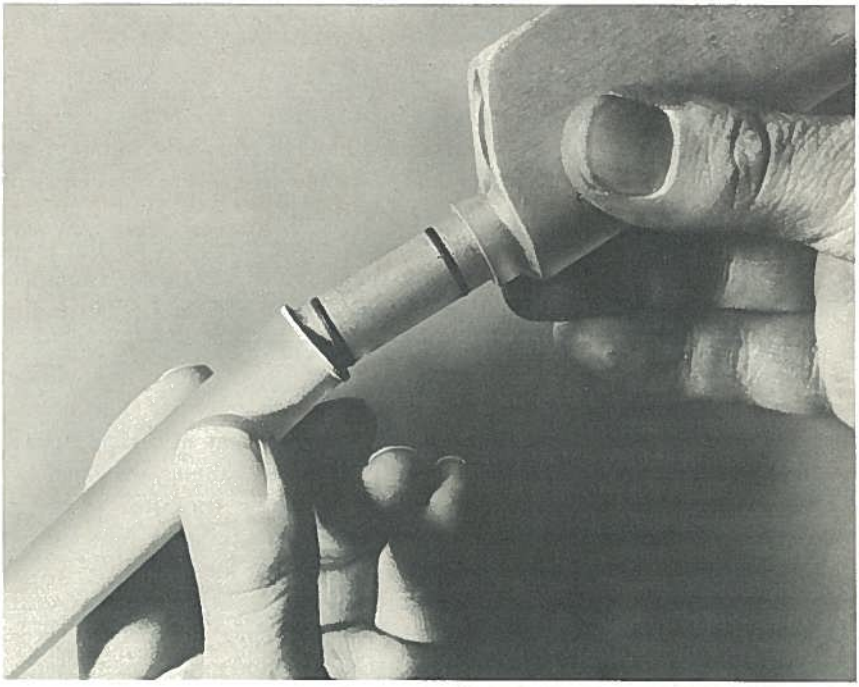

FIGURE 11.—C4 Laser Cane removable joint.

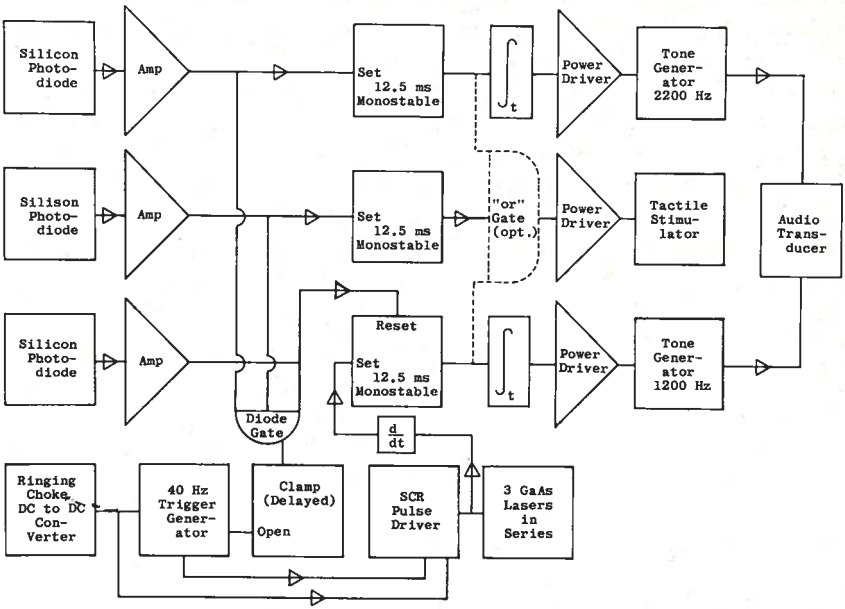

FIGURE 12.—C4 Laser Cane electronic block diagram.

current supplied by the capacitor falls below the lasing threshold of about 90 amperes.

It is interesting to note that the ringing choke supply was originally designed to operate the Xenon flashlamp used in the G5 model obstacle detector, and considerable effort was expended in its development to minimize power loss and weight. It developed that, when the light source was changed to a gallium arsenide laser, this supply was still useful.

The three silicon P–N junction photodiodes, made especially for this purpose by Philco, are each connected to the input of a five-transistor amplifier which has a bandwidth nominally extending from 10 kHz to 3 MHz and a typical gain of $100dB_{vg}$ (10^5 volts per volt). The maximum gain is sufficient to cause triggering of three monostables by 10 to 12 microvolts photodiode noise, one of which is connected to the output of each amplifier. The amplifiers are designed with complementary transistors so that negligible power is used when they are not passing a signal. All three channels are gated by diode steering (AND gates) driven from a switching transistor which is operated by a signal derived from the laser pulse drive circuitry. The gating pulse is delayed a few nanoseconds to take into account the light pulse travel time and the delay time through the electronics. The gate is used to prevent the system from responding to transient flashes of light. Since the gate is operated for only 100 nanoseconds out of each 25 million nanoseconds (repetition rate of 40 Hz), a ratio of 250,000 to 1, the likelihood of a random transient being detected is almost nil. In fact, there is rarely any interference when two such systems are pointed at one another. Detection of 60 or 120 Hz signals from artificial light sources is further prevented by the 10 kHz low frequency cutoff of the amplifiers.

After gating, each amplifier output operates a complementary one-shot multivibrator, which draws no current when not triggered. The output pulse of each is adjusted to 12.5 milliseconds, so that detection of a single light pulse will give a stimulus of this duration. This increases the likelihood of human response to the stimulus. In the "straight-ahead" channel the multivibrator drives the stimulator through a single "saturated" stage amplifier. The stimulator thus operates at a 40 Hz rate with a 50 percent duty cycle (12.5 milliseconds). All three channel monostables had originally been set to 12.5 milliseconds so that their outputs could be combined (OR gate) to cause operation of the tactile stimulator by all obstacles. Later experimentation showed that most users found less confusion if the tactile stimulator was operated only by the "straight-ahead" channel. The output of the "upper channel monostable pulse is stretched to about 200 milliseconds by an integrating-type stretcher. The stretched pulse, through a complementary power driver, turns on a 2200 Hz square wave uninjunction relaxation oscillator. The "downward" logic uses elements similar to those of the "upward" channel, but with "reversed" logic. Thus the monostable is started by

a differentiated spike derived from the laser pulse driver. The monostable is very promptly reset if a pulse is produced by the "downward" amplifier, thus producing no discernible output. However, if no pulse is returned through the amplifier, the monostable remains on for its set period of 12.5 milliseconds. As in the upper channel, the monostable pulse is stretched to 200 milliseconds and, in this case, turns on a 1200 Hz oscillator. The outputs of the two oscillators are coupled to a barium titanate piezoelectric output transducer, the response of which is peaked and broadened by an inductor.

Power to the whole system is supplied by a 12-volt 225-milliampere-hour nickel-cadmium rechargeable battery. The lasers and associated drive circuitry consume .3 watt, the electronics another .1 watt, while the stimulator and tone generators together take an additional .3 watt. Thus the whole system, when running with all three channels producing outputs, consumes .7 watt. The average power consumption in typical usage appears to be about .5 watt. Under normal use it has been found that the battery will operate for about 5 hours before requiring recharging. As it discharges, the system loses sensitivity and the repetition rate decreases. The laser drive energy storage capacitor makes an audible ticking noise; thus an alert user can hear the slowing of the repetition rate. The battery recharge rate has been set to half the discharge rate, so that it takes 10 hours to recharge after fully discharging. The charger is a small unit that plugs into any AC line and connects to a socket in the cane handle through a small, phone-type plug. The charger is transformer-coupled and produces a voltage which is too low to constitute a shock hazard. It may be left connected even after the battery has achieved full charge without causing damage.

EVALUATION

After the Model C3 cane was completed in December, 1967, it was taken to eight mobility training centers on the East Coast and in the Midwest in order to collect comments and reactions before designing and building the "final" model. An estimated 50 people used the cane indoors and out for periods of time between 10 minutes and 1 hour each. The results of the study are summarized below.

Performance as a Conventional Cane

1. *Appearance.* Judged to be satisfactory and non-attention-getting, but considered to be too "masculine" to please the ladies. The exaggerated appearance of the crook (thickness, radius of curvature, and length of back portion) tended to rub in the fact that this is indeed a cane with its "badge of blindness" connotation.

2. *Feel.* The feel of metal was judged to be not as pleasant as plastic, cloth, or rubber. Those with sweaty hands commented on this aspect particularly. The thickness of the electronic portion was commented on favorably

by most people, but unfavorably by one man with small hands and by several ladies.

3. *Flat.* All who were asked considered the flat to be valuable as an orienting surface and to have a pleasant feel about it, though some felt that, if there was any advantage to it, the flat area could be narrower. The location of the switch in the flat area was considered good, but it was suggested that it be turned at right angles to its present position, so that if the finger slipped as a result of the cane's banging into something, it would not result in turning the device off or on accidentally.

4. *Center Joint.* It was considered desirable to have means for folding the cane in half when not in use. However, rigidity of this joint is quite important, and this rigidity must be achieved without increasing the weight of the lower half of the cane. No one seemed to feel too strongly on this point, perhaps because all visited were used to using the present Typhlocane, which is noncollapsible.

5. *Weight.* Perhaps because of the large diameter and general bulky appearance of the upper part of the cane, everyone was surprised at how light it seemed to be. One small man and the women were exceptions to this statement. Those who carried the cane for a ½ hour or more were asked, "Well, how does it feel now?" The general response was that it was certainly considerably heavier than the cane they were used to, but if it was absolutely necessary, the weight could be lived with for the proffered advantages.

6. *Balance.* Again, almost everyone evinced surprise at the balance. Some made tests to compare it with the Typhlocane. The most interesting test was made by one brave blind trainer who raced full-tilt toward a downgoing flight of steps to find out if the cane tip would fall over the edge of the steps before he did! He concluded that in this respect it seemed to be as "fast" as his regular cane. If the cane tip was raised 2 or 3 in. above the ground and then allowed to fall, it would bounce two or three times more than a Typhlocane undergoing the same test. This effect is probably a combination of balance plus mass or moment of inertia.

7. *Tip.* No effort was made to determine whether or not a tip made of some other material than the nylon tip on the present cane would have been better. This nylon tip is the same as that on the Typhlocane, and, since most of the people contacted were Typhlocane users, the question was not discussed.

Electronic Information Outputs

1. *Stimulator.* The stimulator was judged by all to be quite satisfactory in feel, power, and frequency. Those who used it outside with gloves on found no difficulty in sensing the stimulator through the glove. The position between the top laser beam and the stimulator seemed to be short enough to

accommodate the smallest hands encountered, but with the smallest two or three hands it was close.

2. *Tone.* The range of tone intensities seemed adequate, though in a noisy outside environment the maximum volume still may not be enough. Four people were not able to hear the high-pitched tone, and there was confusion on the part of some as to whether the high or low-pitched tone was being sounded. This confusion did seem to disappear with continued use.

3. *Telemetry.* Almost everyone felt that it would be useful to have the tones available in hearing-aid eyeglasses, provided no wire had to connect the eyeglasses to the cane. One or two felt that a tone in this location would cause serious masking of conventional auditory cues. Interestingly enough, these people were familiar with the Kay device, and, even so, they had this feeling.

Individual Channel Performance

1. *Dropoffs.* Almost everyone felt that this was by far the most important feature of the cane. Some went so far as to say that if the other two channels were missing, the cane would still be quite worthwhile. It was felt by these people that the most serious failing of the conventional cane and also of the Kay device was its lack of ability to detect dropoffs as far ahead as the user would wish. One person felt that overhangs were more important than dropoffs, and that unless the dropoff detector could detect even small dropoffs (e.g., large cracks in the sidewalk), it would be better not to have it for fear it would fail to give warning of a small dropoff. He felt that people were as likely to trip and fall over small dropoffs as they were over large ones. His experience, however, was with training old people exclusively, and he felt that this might have some bearing on his point of view. Most others felt that small dropoffs would not be serious, but that it would be desirable to detect a 6 or 8 in. curb. (The C3 cane would not detect a dropoff of less than a foot under any condition.) The C3 cane contained one technical fault which was corrected in the next model. If there were a light-colored wall only 2 ft. behind the dropoff, the signal returned from this wall would make the dropoff indicator fail. Dropoff detection is supposed to be achieved by optical triangulation. However, by suitable adjustment of the amplifier sensitivity control, it was found that appreciably more sensitive performance could be obtained, making use of changes in reflectivity of the dark streets and dark gutters as compared with the generally lighter colored sidewalks. So it would seem desirable to make such a sensitivity control available, at least in the models to be evaluated, in order to see whether a sophisticated user could get further information from this characteristic.

2. *Straight-Ahead Detection.* This channel seemed to prove valuable for many things beyond the detection of obstacles. It was found useful for following shore lines, for walking a straight line down a corridor, for following a person a few feet ahead, and for finding narrow doorways well before

the cane tip found them. The general effect of all this was to noticeably increase the "grace" with which some people walked with the cane indoors. This is a very tricky matter to evaluate, however, inasmuch as all of the people using the cane were either experienced blind travelers or experienced mobility trainers and thus could do quite well in a familiar, nontension-provoking environment anyhow. A test was performed once or twice, however, in which the same user walked the same course using the cane with the electronics switched on one time and off another, and it is on the basis of these observations that the comment about graceful walking is made.

One person found the cane unusually useful for locating "the trough in the snow" through which sighted people were threading their way. It was not clear whether the straight-ahead or dropoff channel was being used for this purpose, but it was very clear that, with the cane turned off, the same performance was not achievable.

3. *Overhangs.* In principle, almost everyone agreed that it would be quite desirable to have advance warning of an overhang. But when people tried the cane, there was also almost universal agreement that this channel was the least important of the three. Some, in fact, found it confusing, and one or two actually undesirable. It was concluded that detection was set too far in front of the cane, so that not only was warning given of an overhang, but also, if an object came within a foot of the cane tip, warning was also given with the same high-pitched beep of the wall or other obstacle that had already been detected by the straight-ahead channel.

As a result of this evaluation, the following changes were made on the present (C4) model:

1. The weight was reduced from 2½ to 1⅓ lb.
2. A joint was placed between the upper and lower sections.
3. The diameter of the upper section was reduced from 1.2 in. to 1 in.
4. The upper and lower nacelles were substantially reduced in size.
5. The on/off switch was repositioned to reduce the likelihood of accidental actuation.
6. The laser discharge capacitor, which was quite noisy in the C3, was quieted to eliminate its drawing the attention of the user or those passing by.
7. The upward channel stimulator tone was lowered by an octave to help those with high frequency hearing loss.
8. Optical and electronic crosstalk between channels was eliminated.
9. A sensitivity control was installed in the downward looking channel.

THE FUTURE

Currently, several copies of the Laser Cane are being fabricated to be tested by blind travelers and mobility trainers. The results of these tests will

determine what changes should be made in design and what techniques will prove valuable in using the cane.

As for the future, it may be viewed through laser glasses! The time is nearing when it may become technically feasible to build an entire system into such a device. This would have the advantage of leaving the hands completely free and allowing the traveler to scan the scene ahead in a more "normal" way. The glasses should contain two channels, one downward looking, so that holes could be detected without any special effort.

Beyond this, it is our opinion that more will have to be learned about how the human operator assimilates and uses information before there will be much point in designing devices that can produce more information.

It should be pointed out that canes, flashlights, and glasses all form part of a general armamentarium that should be available to the user to suit the individual situation. No one instrument can be reasonably expected to be a panacea for all mobility problems.

ACKNOWLEDGMENTS

This work has been supported since its inception by the Veterans Administration under the sympathetic direction of Dr. Robert E. Stewart and Dr. Eugene F. Murphy. Professor Thomas A. Benham, of Haverford College, has been the Principal Investigator.

The engineering of the cane has been carried out by D. Ridgeley Bolgiano, E. Donnell Meeks, Jr., and the author. Past work leading up to the cane development was engineered by Dr. Don DeVault, who, in turn, picked up the work of Daniel Berger and Randall Thomas in addition to the author. Much thought, effort, and materials have also been contributed through the years by concerned and talented machinists, technicians, and vendors.

REFERENCES

1. Jacobson, B.: Passive Systems: A Magnetic Compass and Straight Course Indicator for the Blind. Proc. Int. Cong. on Technology and Blindness, L. Clark, editor, Am. Foundation for the Blind, New York, Vol. I, pp. 193–204, 1963.
2. Zahl, Paul A., editor: Blindness, Modern Approaches to the Unseen Environment. Princeton Univ. Press. 1950. [Reprinted 1962, Hafner Pub. Co., New York]
3. Benham, T. A. and J. M. Benjamin, Jr.: Active Radiating Systems: An Electronic Travel Aid. Proc. Int. Cong. on Technology and Blindness, L. Clark, editor, Am. Foundation for the Blind, New York, Vol. I, pp. 167–176, 1963.
4. Bibliography of Mobility Research. Am. Foundation for the Blind, New York, Dec. 1964.
5. Shrager, P. G. and C. Süsskind: Electronic Aids for the Blind. Electronics Res. Lab., Univ. of Calif., Berkeley, Int. Tech. Memo. M–64, Mar. 1964.
6. Twersky, V.: Auxiliary Mechanical Sound Sources for Obstacle Perception by Audition. J. Acoustic Soc. Am., 25(1): 156–157, Jan. 1953.
7. Witcher, C. M. and L. Washington, Jr.: Echo Location for the Blind. Electronics, 27(12): 136–137, Dec. 1954.

8. Roberts, A.: Ultrasonic Echo Sounding Equipment for the Blind. Radio News, p. 6, June 1949.
9. Slaymaker, F. and W. F. Meeker: Blind Guidance by Ultrasonics. Electronics, 21(5): 76–80, May 1948.
10. Kay, L.: Ultrasonic Mobility Aids for the Blind. Proc. Rotterdam Mobility Res. Conf., pp. 9–16, May 1965.
11. Freiberger, H.: St. Dunstan's Int. Conf. on Sensory Devices for the Blind. Bull. Prosthetics Res., BPR 10–6: 66–97, Fall 1966.
12. Riley, L. H., M. W. Gunther, A. Y. Cohen: Evaluation of the Sonic Mobility Aid. Bull. Prosthetics Res., BPR 10–6: 125–170, Fall 1966.
13. Zarowin, S., editor: Electronics Review: A Little Millimeter Radar. Electronics, 41(5): 40–41, May 4, 1968.
14. Gibson, R. J.: Active Radiating Systems: The Electronic Cane. Proc. Int. Cong. on Technology and Blindness, L. Clark, editor, Am. Foundation for the Blind, New York, Vol. I, pp. 177–181, 1963.
15. Kallmann, H. E.: Optar, A Method of Optical Automatic Ranging as Applied to a Guidance Device for the Blind. Proc. I.R.E. 42: 1438–1446, 1954.
16. Cranberg, L.: Sensory Aids for the Blind. Electronics, p. 116, Mar. 1946.
17. Hannan, W. J.: Laser Eyes for Blind Walkers. IEEE Student Journal 6(2): 11–15, Mar. 1968.
18. Sokal, N. O.: Area Display of Obstacle Location for Use With a Guidance Device for the Blind. Master's Thesis, Dept. of E. E., M.I.T., Sept. 1950.
19. Benham, T. A.: Evaluation of Signal Corps Sensory Aids for the Blind, AN/PVQ (XE–2). Report on Veterans Administration Contract V1001M–1900, April 25, 1952.
20. Deatherage, B. H.: The Evaluation of the Haverford-Bionic Instruments Obstacle Detector. Proc. Rotterdam Mobility Res. Conf., pp. 201–234, May 1965.
21. Benham, T. A.: Bionic Instruments Travel Aid. Int. Conf. on Sensory Devices for the Blind, St. Dunstan's, London, pp. 255–274, June 1966.