SOME DESIGN ASPECTS OF AN EXPERIMENTAL FLUIDIC CONTROL SYSTEM [a]

Horst Arp, Dr.-Ing.
Assistant Research Engineer

Biotechnology Laboratory
Department of Engineering
University of California
Los Angeles, Calif. 90024

ABSTRACT

The use of fluidic devices in pneumatic or hydraulic servomechanisms appears to be very promising because of the intrinsic high reliability of such components. However, due to the dynamic properties of both proportional and digital fluidic elements, several design problems arise. These are chiefly impedance match difficulties, interface problems, and nonlinearities.

To provide an idea about typical design procedures the development of a fluidic control system is described. The system is intended to sequence and coordinate the movements of upper-extremity prostheses or servo-manipulators. The general method of approach is outlined by a block diagram. Important portions of the circuitry are given in detail: The design of a simple pneumatic force-to-pressure transducer is discussed, a movement control subsystem suitable for fluidic implementation is shown to be derived from a basic servomechanism concept, and the logic circuitry for a movement coordination system is developed.

Finally, some suggestions are made as to the utilization of a pneumatic stepping motor device to improve the positioning accuracy and to provide for a reliable "hold" function of pneumatic actuators.

INTRODUCTION

The present state of the art in the development of fluidic signal processing devices allows for the implementation of control concepts so far known only by analogs from circuits of electronic instruments. Limitations to direct analogs are present through the usually low ratio of in-

[a] Both theoretical and experimental research for this report was carried out at the Biotechnology Laboratory, UCLA, under the supervision of Dr. John Lyman. The study was sponsored by the Max-Kade-Foundation, Inc., New York, through a research fellowship and by the United States Veterans Administration through Contract Number V1005P–9779.

put to output impedance, accompanied by a comparatively high consumption of working fluid, and through certain threshold phenomena and other nonlinearities. However, if control systems have to be designed which require actuators for the deployment of substantial forces over displacements according to controlled movement patterns the superiority of hydraulic or pneumatic actuator systems over electrical motors as regards the volume and weight requirements per unit force or torque has to be considered. Correspondingly it is worthwhile then, to investigate the feasibility for utilizing circuitry components which can be operated by the same working fluid as required for the actuators. This might well outweigh some component performance deficiencies in terms of reliability improvements for the functions of the completed system. In particular this applies to the design of powered manipulator systems and to the development of upper-extremity prostheses control circuitry. For both types of control tasks high performance reliability and easy operability are desired simultaneously. Given the high intrinsic functional reliability of fluidic devices the simplification of the system's operability remains as a major design task. This is closely related to the task of easing the so-called decision load which is imposed upon the operator as he handles the manipulator or prosthesis. The decision load may be deemed high, or too high, if the number of sequential and/or parallel decisions required per unit time to generate a desired movement pattern of the actuator system is too high to be supplied by the operator, either manually or through suitable transducers in case of an amputee. A general analysis of the information requirements for operating externally powered artificial arm systems has been presented by A. Freedy, L. F. Luccacini, and J. Lyman (*1*).

One approach to reduce the decision load bearing upon the operator is to provide circuits controlling automatic subsequences of desirable movement patterns which need no more than "go" or "stop" decisions to be executed or terminated. The general concept of this approach is outlined in Figure 1. Input information is picked up through as many transducers as can be controlled simultaneously and independently of each other. The transducer output signals usually have to be converted and resolved into the essential components to be used in a movement pattern generator whose outputs in turn energize the actuator system. There will be at least one actuator for each degree of freedom of the desired movement patterns. It should be noted that, in general, each input transducer might be connected to more than one actuator.

A PNEUMATIC FORCE-TO-PRESSURE TRANSDUCER

A suitable input transducer has been developed separately. It employs the force balance principle and assigns proportional output pressures to

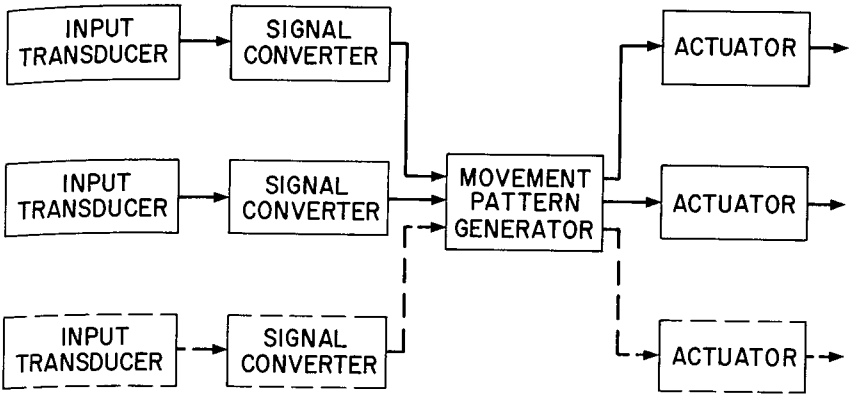

CONCEPT OF A MOVEMENT CONTROL AND COORDINATION SYSTEM

FIGURE 1

forces applied to a specified input area and within a certain directional cone (Fig. 2). This is achieved by covering an annular space and a concentrically located vent by a diaphragm and supplying pressure through an orifice to the annular space. Forces acting on the diaphragm, after having been distributed by a suitable diaphragm core, will throttle the vent and thus generate an equivalent back pressure acting against the annular area of the diaphragm. This pressure can be picked up from the annular space through another orifice. A diaphragm suspended actuator place resting against a spherical adapter piece which in turn is attached to the core of the diaphragm covering the annular space provides for proper alignment of the input forces. Overload and excessive tilting of the input plate are prevented by limiting its maximum displacement through a spacer ring. Holes for venting the diaphragm interspaces complete the design. The transducer serves as a very convenient variable pressure source and could be designed to be incorporated in an amputee's harnessing.

THE SELECTION OF AN ACTUATOR SYSTEM

The Utilization of a Simple Feedback System

As essential as the availability of suitable input transducers is the selection of an appropriate actuator concept with regard to its position-

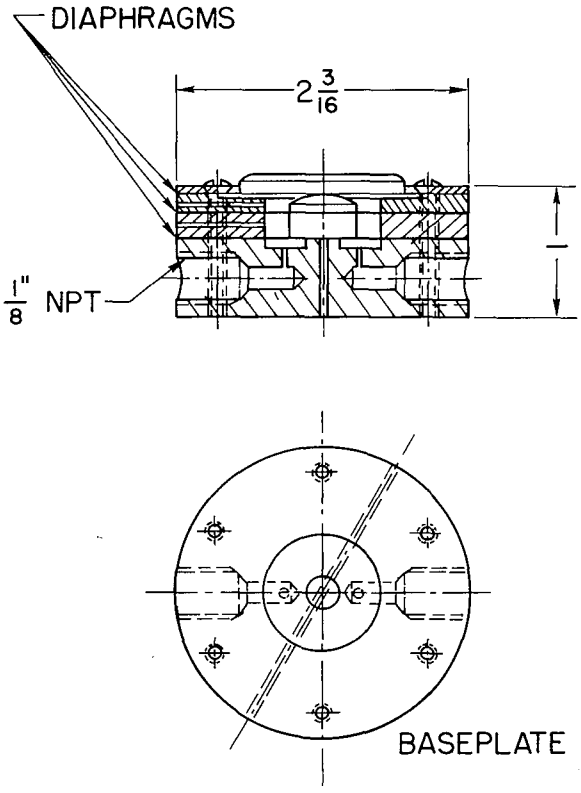

PNEUMATIC FORCE-
TO-PRESSURE TRANSDUCER

FIGURE 2

ing accuracy, stability of operation, and functional reliability. If both the signals available from the transducers and those required for the actuators are determined, a movement pattern generating system can be designed realistically. A generally employed structure for actuator devices is that of a simple servomechanism as shown in Figure 3. The actuator itself will always be integrating because no step output signals are achievable in realizable displacement controlling systems, as this would require infinite acceleration. For the same reason the actuator will have at least an additional first order time lag. A decoupling differential amplifier is used to generate an error signal to drive the actuator in order to minimize the difference between the command and the feedback signals. The dashed lines in Figure 3 indicate that the summing

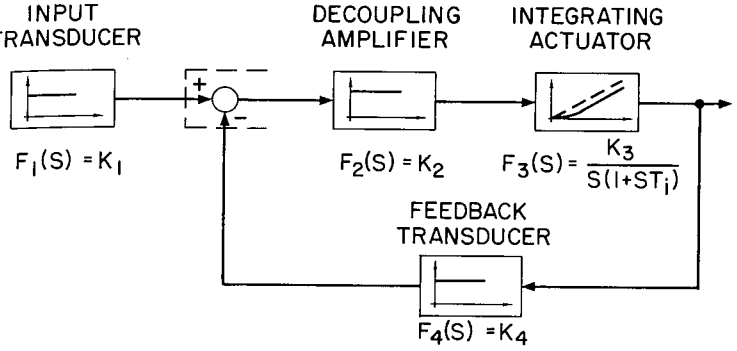

$$F(S) = F_1(S) \cdot \frac{F_2(S)F_3(S)}{1 + F_2(S)F_3(S)F_4(S)} = \frac{K_1}{K_4} \cdot \frac{}{1 + \frac{S}{K_2K_3K_4} + S^2 \frac{T_i}{K_2K_3K_4}}$$

OSCILLATORY IF $T_i K_2 K_3 K_4 > 1/4$

BLOCK DIAGRAM OF A SIMPLE LINEAR SERVOMECHANISM

FIGURE 3

joint is an integral part of the decoupling amplifier. As usually the dimensions of the actuator output variable and the amplifier input signals are different, a special feedback transducer is required.

Prospective performance data of the completed system can be obtained from calculating its transfer function (Fig. 3). By factoring the denominator of this function (through solving the characteristic equation) it is found that the transfer function will have complex poles if the product of loop gain and lag time constant exceeds 1/4. (This product is dimensionless because of the definition of K_3 in $F_3(s)$.) The system would then show oscillatory transitions which are deemed undesirable in manipulator or prostheses devices.

The Feasibility of an Open-Loop Actuation System

If linear systems are considered, the same functional performance as shown for the feedback mechanism can be obtained from an open-loop system incorporating a realizable first order lag differentiating network. This is shown in Figure 4. A decoupling amplifier is still required either to decrease the load on the transducer or to provide for the proper impedance match between diffentiating network and actuator. However, the feedback transducer is eliminated, and, by calculating the roots of the characteristic equation again, it turns out that this approach would not give rise to oscillatory movements—as long as the linear description applies. On the other hand, the positioning accuracy of this open-loop system is considerably more impaired by friction and other unavoidable

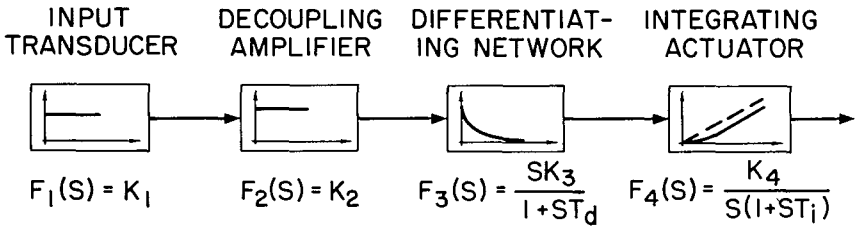

$$F(S) = \prod_{i=1}^{4} F(S) = \frac{K_1K_2K_3K_4}{1+S(T_i+T_d)+S^2T_iT_d}$$

$$(T_i+T_d)^2 \geq 4T_iT_d \implies \text{NON OSCILLATORY}$$

BLOCK DIAGRAM OF A SIMPLE LINEAR FEED-FORWARD SYSTEM

FIGURE 4

causes of interference than the feedback mechanism described before. Nevertheless the open-loop approach was chosen as the basic movement control concept because it was expected that the movement coordination system would be a sequential mechanism, suggesting and facilitating the use of a typical open-loop terminal device, a stepping motor.

THE FLUIDIC IMPLEMENTATION OF THE ACTUATOR CONCEPT

A General Description of the Fluidic System

A representation of the fluidic implementation of the actuator's circuit diagram shown in Figure 4 is given in Figure 5. The diagram reads as follows: Input signals are generated through a transducer, Tr. A decoupling amplifier, P, is provided to minimize the load on the transducer. A differentiating network composed of two proportional amplifiers, P, a capacitor, Vol, and a restrictor, R_1, causes the system to become rate sensitive. Connected to the differentiating network are two Schmitt-triggers which in turn feed an OR gate and a bistable device, B. Outputs from these elements control two interface valves, I_1 and I_2, through which the actuator A is operated.

The unusual configuration of the differentiating network stems from the dynamic properties of the fluidic amplifiers: As there is a continuous flow of working fluid through all utilized ports of a proportional amplifier a restrictor inserted asymmetrically in one of its control lines

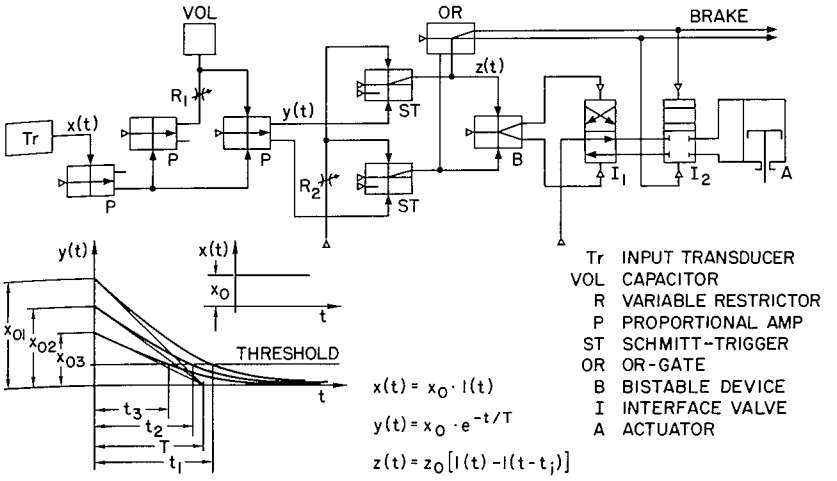

NONLINEAR FLUIDIC CONTROL SYSTEM

FIGURE 5

would prevent the pressure in that line from reaching the same value at the control port as would be achieved without the restrictor. In other words: Attempting to differentiate through only one (standard) fluidic proportional amplifier would always give rise to a standing output signal component—unless the internal control orifices of that amplifier are dimensioned asymmetrically. Therefore, a second proportional amplifier has been introduced to raise the pressure level of the signal in the time lag channel. At the next amplifier this signal is subtracted from the opposed direct input to perform the desired differentiation. The time constant of the differentiating system can be altered by changing the size of the capacitor or the level of the supply pressure of the additional amplifier.

The Incorporation of Switching Interface Valves

The Schmitt-triggers have been provided to compensate for the switching characteristic of the interface valves. As there were no proportional interface amplifiers available to generate control signals at the pressure level required by the actuator, commercial interface valves have been employed. This of course introduces a strong nonlinearity: Without additional measures the actuator would merely be switched, thus tending to operate at maximum speed as soon as the switching threshold of the interface valve is reached. This also means that output displacements would tend to become independent of the amplitude of

the input signal as derived from the input transducer. This is because step input signals processed through a linear first order lag differentiating circuit will decrease to below 2 percent of their initial amplitudes within four times the time constant of the differentiating system and therefore rapidly become almost indistinguishable. An easy way to overcome this difficulty is to provide a threshold for the differentiated signal, and to detect the portion beyond the threshold by Schmitt-triggers, as illustrated in Figure 5. Through this measure the original pressure modulating concept is converted into a pulse width modulating system. This can be regarded as an improvement as a sensitivity threshold to prevent inadvertent operation of the actuators is required anyway. Furthermore the on-off signals as derived from the Schmitt-triggers can be utilized directly to operate logic gates as required in a movement pattern generator. The nonlinearity of the system is not expected to impair its performance if repeatability of its functions can be maintained—because of a human operator's ability to engage in learning processes.

The portion of the fluidic system described so far generates "outputs" at either Schmitt-trigger according to the sign and the (step-) amplitude of "inputs" to the transducer. Pressing the transducer button operates one Schmitt-trigger, releasing the other one. The rates at which input signal changes occur determine the durations of the Schmitt-trigger outputs. Adjustments of the threshold determining restrictor, R_2, show interdependency with the setting of the time constant determining restrictor, R_1. If properly used this can provide another means to compensate for the asymmetry of the differentiating network.

Measures to Secure Output Positions

If no change in position is desired, both Schmitt-triggers have zero output. As this might lead to an indeterminate position of the interface valve I_1 a stabilizing element has been introduced by providing a bistable device or flip-flop. Furthermore, as it cannot be expected that a real open-loop operated actuator cylinder will hold a position over a reasonable period of time, appropriate signals to drive a position securing device have also been picked up from behind the Schmitt-triggers. For hydraulic actuators it may suffice to block the input ports for maintaining an actuator position. Interface valve I_2 in Figure 5 has been provided for this operation. However, for gas-operated cylinders, even though fitted with rolling diaphragms, this is inadequate because of the gas expansion and load relationships as well as other factors. To compensate for this, additional braking devices may be provided which can be operated through the same signals as utilized for the blocking valve I_2.

THE DEVELOPMENT OF A MOVEMENT PATTERN GENERATOR

General Considerations

After a suitable actuator system has been selected the more specific task of devising a movement coordinating or movement pattern generating system comprising more than one actuator can be investigated. Several approaches are generally available; with rising degree of complexity the following procedures appear to be feasible: 1. "Desired" movement patterns can be determined ad hoc and implemented directly. 2. If simulations of "natural" movements are desirable motion, pictures can be taken about the performance of corresponding biological systems. Analyzing these pictures with respect to the sequence and duration of movement components will then provide the required design information. Finally, 3., if comprehensive descriptions of neurological control concepts for generating desirable movement patterns in animal systems are available, these might be modeled, either by attempting to use artificial neuron modules, as presented for instance, by D. M. Wilson and I. Waldron (*2*), or according to appropriate logical interpretations.

The Representation of the Control Requirements

An example for determining the requirements of a simple movement coordination system, as utilizable for upper-extremity prosthesis control is given through the sequencing table of Figure 6. It is assumed that two input transducers are available to control the overall radius, R, as measured from the shoulder joint, and the direction, D, respectively, of a bisectional prosthetic device capable of rotations about the shoulder and elbow joints. Two actuators, Y_1 and Y_2, of the double-acting type are assigned to the device. Control signals effecting positive changes of the output variables, R and D, with respect to a reference position are designated by y_{11} and y_{21} respectively. The corresponding control signals for negative changes are represented by y_{10} and y_{20}. It is realized that a change in radius, ΔR, will require both actuators, Y_1 and Y_2, to be energized, whereas a change in direction, ΔD, may be accomplished through only one actuator, Y_2. A typical subsequence to be automated is observed for the task of arm lifting from its normal rest position. In order to reach an object in front of oneself and somewhat elevated above the hand's normal hang down position, the forearm is usually first flexed in a way to generate a radius R smaller than required for reaching the object; next or simultaneously the upper arm is raised, and finally the forearm is stretched to complete the hand's approach to the object. This procedure can reduce the torque requirements for the task considerably. The fifth line of the sequencing table, Figure 6, reflects the situation.

As there are two input transducers, one of which is connected to both

Sign of desired changes in radius R and direction D		Actuators Y to be energized at time								
		t_o				$t_o + \Delta t(\Delta R, \Delta D)$				
ΔR	ΔD	y_{11}	y_{10}	y_{21}	y_{20}	y_{11}	y_{10}	y_{21}	y_{20}	
0	0	0	0	0	0	0	0	0	0	
+	0	1	0	1	0	0	0	0	0	
-	0	0	1	0	1	0	0	0	0	
0	+	0	0	1	0	0	0	0	0	
+	+	0	1	1	0	1	0	1	0	
-	+	0	1	0	0	0	1	u	v	1)
0	-	0	0	0	1	0	0	0	0	
+	-	1	0	0	0	1	0	v	u	1)
-	-	0	1	0	1	0	0	0	0	

1) $u = 1, \quad v = 0, \qquad |"\Delta D"| > |"\Delta R"|$

$u = 0, \quad v = 0, \quad$ if $\quad |"\Delta D"| = |"\Delta R"|$

$u = 0, \quad v = 1, \qquad |"\Delta D"| < |"\Delta R"|$

TABLE OF REQUIRED SEQUENCING AND INHIBITING SIGNALS FOR A MOVEMENT COORDINATING SYSTEM

FIGURE 6

actuators, opposing command signals might be generated. In order to prevent undesired operation of the actuators these signals have to be inhibited. This is indicated by lines No. 6 and No. 8 of the table: Whenever a desired change in radius requires the direction actuator to be operated according to one of its modes while simultaneously a change of direction is desired which would require the other mode of operation the directional actuator is inhibited. Thus only movements according to the time-weighted difference of desired changes, marked by |"ΔD"| and |"ΔR"|, are executed.

The Logic Circuitry of the Movement Pattern Generator

A logic circuit diagram devised according to the statements of the sequencing table, Figure 6, is shown in Figure 7.

Logic gates in this diagram are represented by semicircular elements. Signal paths ending at the baselines of these elements designate an AND gate. If the paths go through the baseline the OR function is performed. Signal inversion for individual paths is indicated by dots on the

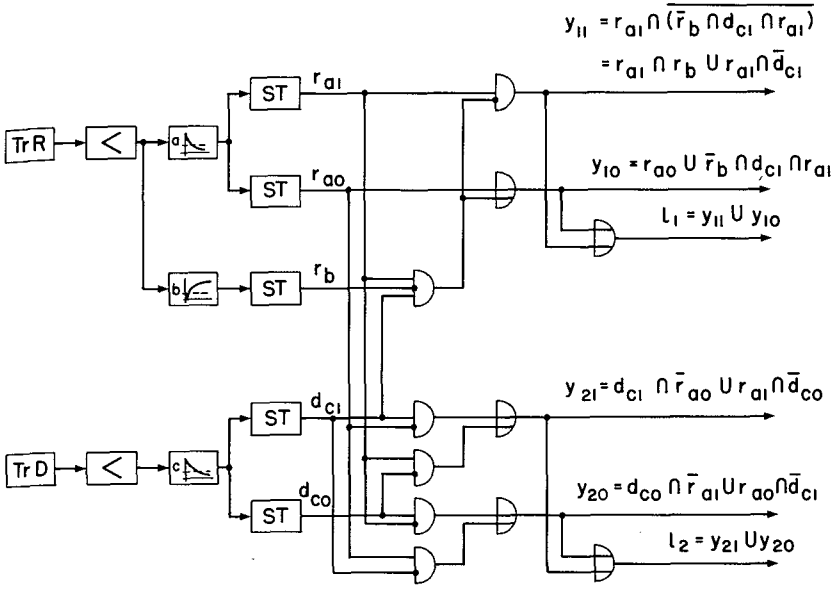

LOGIC CIRCUIT FOR A MOVEMENT COORDINATION SYSTEM
Tr TRANSDUCER, R RADIUS, D DIRECTION, ST SCHMITT-TRIGGER, a,b,c THRESHOLDS, y ACTUATOR INPUT

FIGURE 7

baseline. It should be noted that a systematic implementation of truth table statements for sequencing systems can be very cumbersome. Usually fundamentals of digital machine design have to be employed, as presented for instance by G. Hintze (*3*). However, for the application under consideration a typical instruction counter system could be avoided by providing another Schmitt-trigger subcircuit for generating an appropriate signal, r_b, to start the subsequence. The implementation problem can thus be solved by a few trial and error operations for establishing the logic equations. There is a very simple requirement to begin with: Corrections of both output variables, R and D, have to be independently practicable. Thus all actuator equations will contain a term representing the corresponding Schmitt-trigger output directly. After that the inhibitory and sequencing conditions are added. In order to perform the subsequence for the task of arm lifting the output signal of a first order lag system is used in such a way that its portion below a preset threshold, b, will drive the actuator, Y_1, first in the "mode 0" direction if (and only if) positive changes of radius, R, and direction, D, are commanded simultaneously. The output y_{11} is best understood as par-

tially inhibited by output y_{10}. The second representation of y_{11} given in Figure 7 is obtained through DeMorgan's inversion. The equations describing outputs y_{21} and y_{20} reflect directly the inhibitory conditions as set forth in the sequencing table, Figure 6. To operate locking devices suitable signals can be derived from channels l_1 and l_2 as shown in Figure 7. Due to the threshold concept, the Schmitt-trigger outputs, r_{a1} and r_{a0} or d_{c1} and d_{c0} respectively are not complementary to each other. Whereas they cannot be positive or "on" simultaneously they nevertheless can be zero or "off" at the same time. The real complements of each of these variables appear as soon as the logic diagram is implemented through fluidic devices, as shown in Figure 8. This effect stems from the operating principle of fluidic components utilizing the beam deflection or the wall attachment effects; it is referred to as push-pull property. Due to this property the required signal inversions can be performed without separate inverters.

In Figure 8 the standard fluidic symbols have been replaced by simply denoting the functions to be generated by the fluidic components. This facilitates the inspection of the interconnecting lines and thus provides for an idea about the degree of complexity which has resulted even though the movement patterns to be controlled are still very simple. Re-

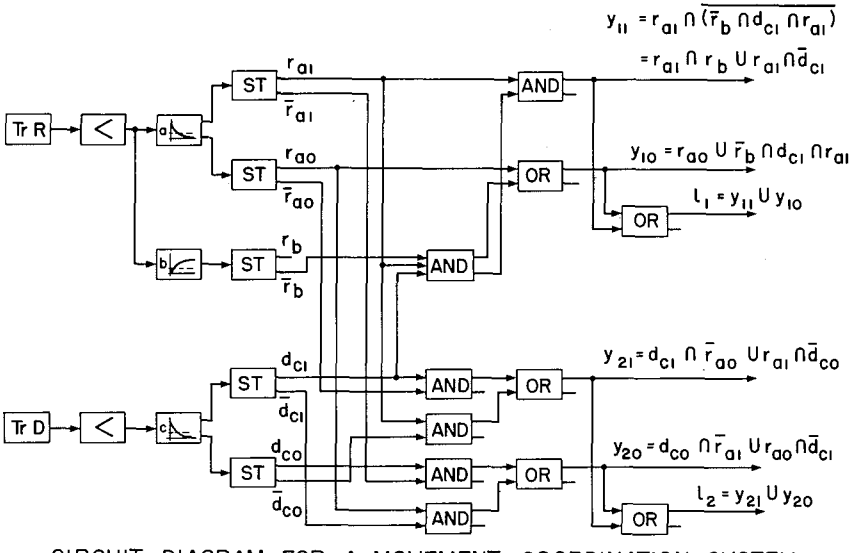

CIRCUIT DIAGRAM FOR A MOVEMENT COORDINATION SYSTEM UTILIZING FLUIDIC DEVICES

Tr TRANSDUCER, R RADIUS, D DIRECTION, ST SCHMITT-TRIGGER, a,b,c THRESHOLDS, y ACTUATOR INPUT

FIGURE 8

calling that for movements of the human arm a "pattern generator" as complex as the central nervous system is employed this is no longer surprising. More important, it also suggests that perhaps utilizing myoelectric signals where possible might be the most feasible way to keep the complexity of the logic circuitry at a practicable level because then the decision making capacity of the brain can be exploited.

Effects of the System's Properties on the Operator's Decision Load

According to the sequencing table, Figure 6, the operator has a choice of nine different control modes, effected by two transducers. However, as sequences for the most likely operation are preset and as there is a well defined rest position an initial decision has to be made between two modes only, viz., to activate or not to activate both transducers simultaneously. This constitutes a 1 bit decision. Assuming then that either the desired radius, R, or the desired direction, D, can be reached through the first decision there is again a choice of two control modes because for corrective action either transducer may have to continue delivering a control signal while the other one is being held. This adds another bit to the required positioning information. Therefore the benefit of the system is to reduce the decision load from ld 9 = 3.17 bit per control decision to a sequence of two 1 bit decisions, for certain very likely movements. As there is no additional storage or influx of information the full decision load of 3.17 bit will be required of the operator as soon as he tries to perform deliberate experimental movements.

THE UTILIZATION OF A STEPPING MOTOR SYSTEM

Motivations for the Utilization of Stepping Motor Devices

The considerations given above for the development of a movement coordination system hold only if the displacement components being commanded by transducer signals can be implemented through an appropriate actuator system. In particular, with respect to the corrective action for either radius or direction, it implies that desired positions of the corresponding actuators can be held as soon as they are achieved. Realizing that the control signals obtainable from the movement coordination system, Figure 7, can also be used to gate pulses from an oscillator, the utilization of a stepping motor device appears to be very promising. For high torque or force requirements a stepping device could be employed to operate the pilot system of a motion feedback servomechanism, thus combining smooth servo action and high stepping accuracy. Principles of pneumatic stepping motor devices are described by J. Prokes (*4*), and the design of a novel pneumatic stepping motor system is covered in detail by W. S. Griffin (*5*).

The Draft of Appropriate Stepping Motor Drive Circuitry

The increase in complexity of the completed control and coordination system also has to be considered when a stepping motor drive system is used: As the stepping device has to be of the reversible type at least three actuator phases are required. This in turn requires an appropriate signal conditioning system in order to drive the stepping device in either direction. A reversible two-stage binary counter, equipped with feedback channels to avoid one of its four states, appears to be suitable. The circuit diagram for such an approach is shown in Figure 9. As fluidic binary counter modules are available the diagram can be implemented as shown by Figures 7 and 8 for the movement coordination system. If, on the other hand, substantially higher flow and pressure requirements have to be met and idling flow has to be kept as small as possible, a stepping motor drive system can also be composed from biased three-way valves, as shown in Figure 10. In this system the ring counter concept is employed. The gated hold subcircuits of the upper line are successively activated by incoming pulses. Their outputs cancel the hold signal of the previous stage and activate ("open") the gate for the next stage. A standing signal in the reversing control path changes the system's interconnecting lines in a way to reverse the canceling and gate activating order. The individual functions of this task are performed by the second and the third row of valves in Figure 10. Biased three-way valves can be obtained by inserting springs in pressure-operated valves. Also suitable are midget diaphragm valves as diagrammatically shown above the circuitry of Figure 10, left insert, and two diaphragm elements, right insert. Descriptions of these devices and some of their applications are given by N. Jeschke (*6*) and S. Yamushita and J. Ito (*7*), respectively. Miniaturized two diaphragm elements are manufactured by AEI Sunvic, Ltd.

For both counter concepts the three pulses required per cycle makes necessary a relatively high number of components: A reversible four-state (two-stage) binary counter can be designed with fewer gates because no feedback paths have to be provided for avoiding one of the available states. A four-stage ring counter requires the same number of biased three-way valves as the counter circuit shown for three stages. This is because the canceling and gate activating lines for one counting mode need no longer be separated through additional valves from the corresponding lines providing for the reversely counting mode.

FINAL NOTES

The number and the type of components so far available permitted the construction and experimental testing of a basic movement control

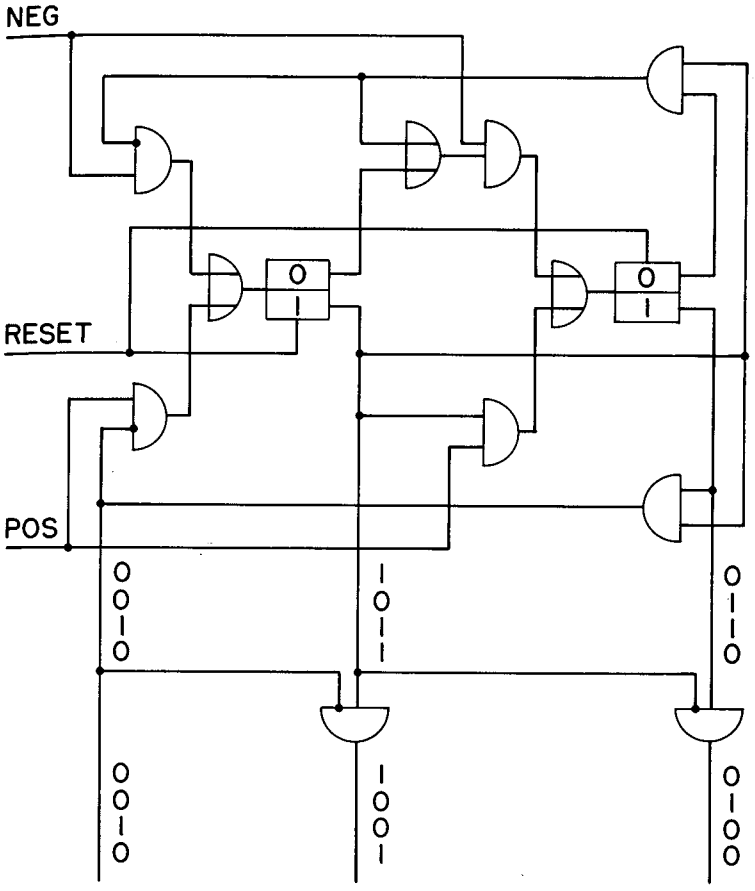

LOGIC CIRCUIT OF A DRIVE SYSTEM
FOR A THREE-PHASE STEPPING MOTOR

FIGURE 9

unit, Figure 11. The fluidic amplifiers which have been used were commercial products supplied through Imperial Eastman/Corning; interface valves were from Asco.

Proceeding from the design data of the movement control unit, functional specifications for the development of a movement pattern generator could be derived. This was done by devising a logic diagram of the pattern generating system through designating and composing the logical functions that are actually required. The final construction of the

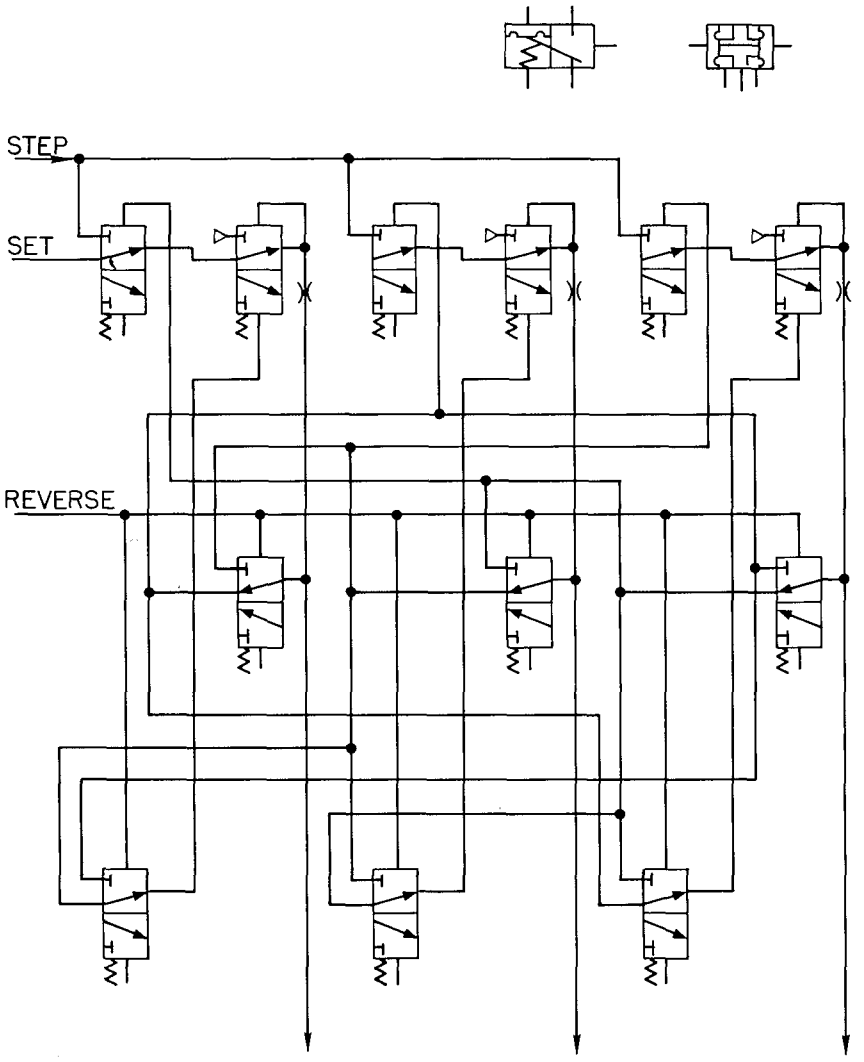

DRIVE SYSTEM FOR THREE-PHASE PNEUMATIC STEPPING MOTOR UTILIZING BIASED THREE-WAY VALVES

FIGURE 10

logic circuitry, however, is largely dependent upon the basic type of components to be used. It is expected that before final implementation both the movement pattern generating circuit and the stepping motor drive system have to be converted into their equivalents based on

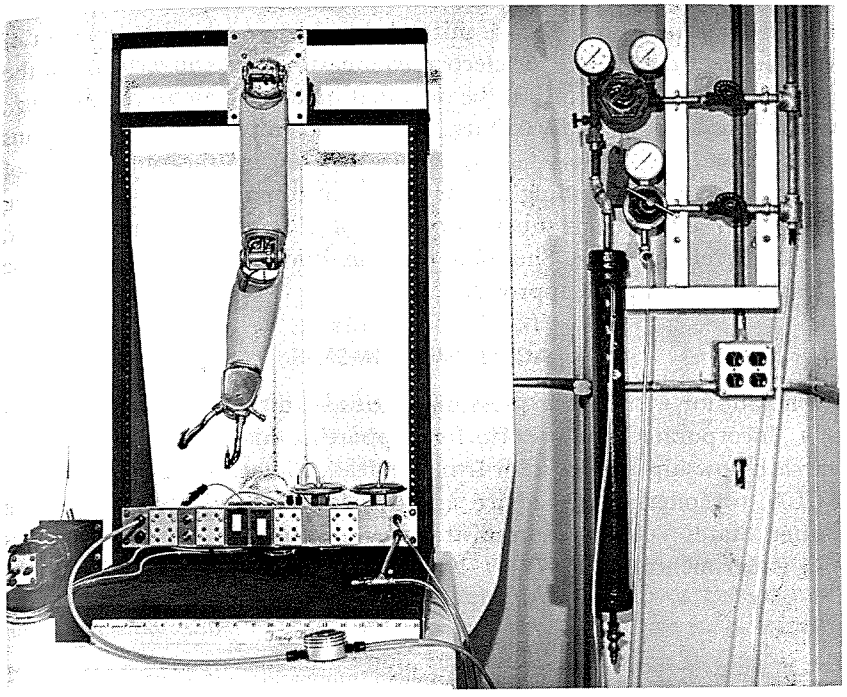

FIGURE 11

NOR-components almost exclusively. This presents itself to be desirable because NOR-components are the most reliable fluidic hardware presently on the market. Reading of logic diagrams, however, is greatly facilitated if the original functions are given.

Since both the pattern generator and the drive system are sequencing devices an additional investigation may be necessary as to the proper decoding of the predetermined states. In particular, special measures might be required to eliminate the decoding of transient phenomena.

CONCLUSIONS

The considerations presented above for the development of a fluidic control system to coordinate movements of 2 deg. of freedom have resulted in a requirement for relatively complex circuitry. Partially this might be outweighed by miniaturizing the circuit components. However, for fluidic devices a miniaturization limit is set by the minimum permissible size of their internal orifices as determined by dirt contained in the working fluid. Therefore, if lowest possible expenditure of volume and weight has to be achieved, it is worthwhile considering a hybrid concept, utilizing electronic logic circuitry and hydraulic or pneu-

matic actuators. This of course shifts the problem to the development of suitable electro-hydraulic or electro-pneumatic signal converters. On the other hand, if the system is to be operated in adverse environments, e.g., in the presence of radioactivity, the fluidic implementation remains superior and more effort has to be directed toward the purification of the working fluid. Stepping up the degree of complexity by considering concepts as advanced as supervisory control of remote manipulation, cf, W. R. Ferrel and T. B. Sheridan (*8*), the fluidic approach still may be a feasible and valuable approach.

ACKNOWLEDGMENTS

The author wishes to express his gratitude to the Max-Kade-Foundation, Incorporated, New York, for supporting his work through a research fellowship; to Dr. John Lyman, Head, Biotechnology Laboratory, UCLA, for offering his advice and Laboratory facilities, and to the United States Veterans Administration for providing support for running experimental tests.

REFERENCES

1. Freedy, A., L. F. Luccacini, and J. Lyman: Information and Control Analysis of Externally Powered Artificial Arm Systems, Biotechnology Laboratory Technical Report No. 42, University of California at Los Angeles, August 1967. Also Bulletin of Prosthetics Research, BPR 10-8: 112–131, Fall 1967.
2. Wilson, D. M. and I. Waldron: Models for the Generation of the Motor Output Pattern in Flying Locusts, Proc. IEEE, 56 (6) : 1058–1064, 1968.
3. Hintze, G.: Fundamentals of Digital Machine Computing, Springer Verlag, Inc., New York, 1966.
4. Prokeš, J.: Pneumatische Schrittmotoren (Pneumatic stepping motors), Olhydraulik und Pneumatik 10 (12) : 439–443, 1966.
5. Griffin, W. S.: A Breadboard Flueric Controlled Pneumatic Stepping Motor System, Technical Note, National Aeronautics and Space Administration, E–3716, Lewis Research Center, Cleveland, Ohio, March 1968.
6. Jeschke, N.: Einige Anwendungen pneumatischer Relaistechnik (Some Applications of the Pneumatic Relay Technology), Regelungstechnik 10 (9) : 410–412, 1962.
7. Yamashita, S. and J. Ito: Pneumatic Crossbar Controls Fermentations Sequence, Control Engineering 15 (1) : 68–69, 1968.
8. Ferrel, W. R. and Th. B. Sheridan: Supervisory Control of Remote Manipulation, IEEE Spectrum, 4 (10) : 81–88, 1967.