DEVELOPMENT AND EVALUATION OF EXTERNALLY POWERED UPPER-LIMB PROSTHESIS [a]

SUMMARY OF RESEARCH PROJECT ACTIVITIES

July 1971–December 1971

Woodrow Seamone, B.A.E.
Principal Professional Staff

Applied Physics Laboratory
The Johns Hopkins University
8621 Georgia Avenue
Silver Spring, Md. 20910

Gerhard Schmeisser, Jr., M.D.
Chief, Prosthesis Clinic

The Johns Hopkins Hospital
601 No. Broadway
Baltimore, Md. 21205

During the latter half of 1971, clinical evaluation continued on eight upper-limb prosthesis External Power and Control (EXPAC) units (see BPR 10–16, pp. 169–176) which had been fitted during 1970–71.

Two basically different types were used: Type A with motor location within the above-elbow prosthesis, and Type B with the motor remote from the prosthesis, e.g., on the amputee's belt. Type B can, presumably, be used for amputations at any level as well as for powered braces (Fig. 1). Both configurations can be connected to provide either terminal device function or elbow flexion or both.

EVALUATION PROGRESS

Test amputees with an assortment of occupations and ages and with a full range of amputation levels were selected to determine system versatility and reliability as well as other factors related to user acceptance. All amputees were fitted with functional, conventional, Body-Powered (BP) prostheses to facilitate comparison with the Externally Powered (EP) prostheses. All amputees were interviewed and examined periodically. A summary chart of the results of the evalution to date is shown in Table 1.

---

[a] Based on work performed under VA contract.

tremely complex material, uncertainties exist both in the area of characteristics of the material, and in the area of mathematical analysis, dependent upon simplifying assumptions. For example, consider the matter of modulus of elasticity, E. What is known of values of E for flesh (a viscoelastic material behaving like a spring connected to a door closer or shock absorber, slowly yielding under load) suggests that E is a function of the stress itself. In contrast, in steel, aluminum, or most other engineering materials, E is a fixed constant of proportionality. Two problems thus are evident: what value of E is to be used and how is the interdependency of E, stress, and time to be handled analytically? In this work E is treated as single-valued (139 p.s.i.), and the question of interdependency with stress or time is ignored. While tools permitting a more sophisticated treatment are available, they are ruled outside our immediate interest—one of preliminary investigation to assess practical payoff.

In a similar manner, Poissons' ratio (of sidewise shrinkage to lengthwise stretching under load) is considered fixed, flesh is considered homogeneous, in spite of obvious anatomical variations, and its viscoelastic characteristics are ignored. What is left, of course, is only a rough approximation of a complex event. Even so, hopefully it retains sufficient accuracy to permit rational and logical assessment of clinical problems. The reader is invited to employ the results but is warned against pushing them too far; two loading situations causing an apparent 20 percent difference in stress, as indicated in these calculations, may in reality have no practical difference in stress level. Gross differences, though, should provoke thought.

METHOD OF PROCEDURE

The basic approach is through a combination of classic procedures based on the theory of elasticity with newer variational methods as given by Vlasov and Leontev (3). General procedures have been presented in the second paper in this series (2) dealing with normal compressive stresses. The particular method for shear stress solution is given in outline below and one case is given in full detail within the Appendix to this paper.

Shear stress is proportional to the shear strain.[a] To solve for shear stress, it is sufficient to solve for shear strain and multiply the strain

[a] Imagine a deck of very thin playing cards glued together by thick, resilient layers of glue. The shear *stress* is the force per unit area parallel to the face of a given card. One obvious portion of the shear strain is the deformation or motion (between one card and the next) divided by the thickness of the resilient layer. Another portion is related to thinning of these layers. Thus, the shear strain is related to the change in angle of a line which connects successive cards and which in the unloaded state, was perpendicular to the face of the first card. (Indeed, such a structure has been used in engineering.)

result by certain conversion factors. Shear strain is the sum of the rate of change of horizontal deflection with thickness and the rate of change of vertical deflection with horizontal traverse. The latter statement follows from the definition of shear; a particularly clear argument on this point is given by Timoshenko (4).

Of the two components of shear strain, we shall assume that the first is negligible (rate of change of horizontal deflection with thickness). This assumption follows common engineering observations that when the load is vertical but moderate (as it is assumed to be throughout this paper), the rate of change of vertical deflection with horizontal traverse is typically an order of magnitude larger than the rate of change of horizontal deflection with thickness.

In general the vertical-deflection term can be written as the product of terms which are functions of either horizontal traverse or thickness. By separation of the variables in this manner, one can determine the partial derivative of vertical deflection with respect to horizontal traverse.

As our interest is centered on maximum values, that value of thickness level corresponding to maximum strain is inserted in the thickness-dependent terms, and the strain computed. Using appropriate conversion factors produces values of maximum shear stress. (The shear stress on the horizontal plane equals that on the vertical plane.)

Just such a process was used to obtain solutions in three of the four cases (see Fig. 1) treated in this work (see Appendix).

In one case (D) the technique given above does not work precisely at the sharp corner of the block. This failure results from discontinuities or the extremely sudden changes in deflection occurring at the edge of the rigid block. The resulting partial derivative is not single-valued and has no practical application. The discontinuity is a serious obstacle to a fully satisfying solution. An alternate means of procedure has been employed, and results have been obtained. These results, though, are incapable of delineating the variation of shear stress with traverse near the corner. Rather, a single point value corresponding to *maximum* shear stress is offered; just where this point is physically located is unknown, except that it falls *outboard* of the block edge or *at* the block edge, but certainly it is not *under* the block.

The procedure in the case of the rigid block is taken verbatim from Reference (3) and will not be repeated here. In briefest outline, additional equations obtained from variational equilibrium conditions and a vertical displacement concept are substituted for the approach given above. The resulting shear relationship is of the equilibrium type, wherein it is shown that shear values of a certain magnitude are required at the block edge to achieve vertical equilibrium of force. However, no comment on shear distribution is possible.

RESULTS

Means of Interpretation

Shear stress solutions have been determined for those four cases illustrated in Figure 1. In each case, a load P is pressing upon a slab of flesh of thickness which is supported by a rigid bone. In Case A the load is applied by a "dull chisel"; i.e., a pointed object whose edge is defined as not sharp enough to slice through the flesh. A corner of a prosthetic socket or of a brace cuff, or a pebble, are possible examples. In Case B a sheet of thin plywood has been inserted between the dull chisel and the flesh. Two different thicknesses of plywood have been treated, 1/16 in.; which is about the thickness of a tongue depressor (and somewhat flexible) and ¼ in., which is about the thickness of a pencil (and substantially more rigid). In Case C a very flexible membrane, elastic bandage, or corset is loaded against the flesh. Here we assume that the constant total load P is divided evenly over the width of the membrane, but that the membrane is so flexible that it has no tension in the direction of its width. In Case D a rigid block with square corners is pressed against the flesh. Again, the load P is assumed evenly distributed over the block width.

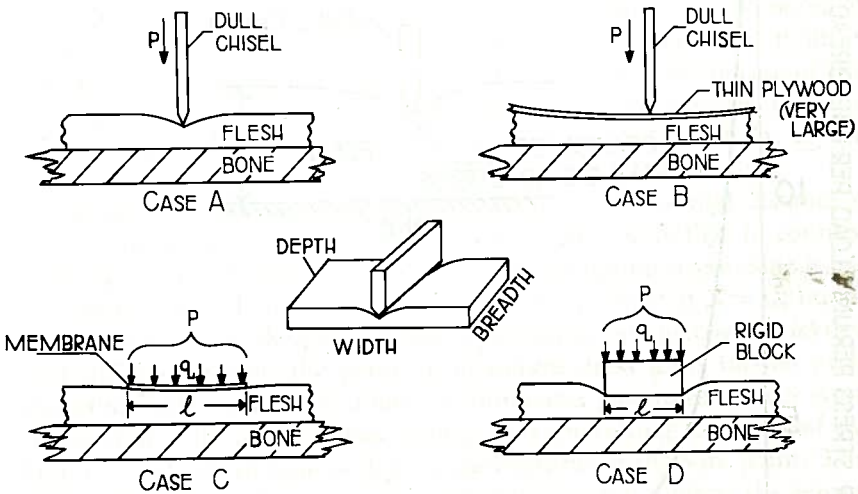

TYPES OF LOADING STUDIED

FIGURE 1

For a given value of P and flesh thickness (taken in these computations as either 1 in. or 3 in.) all shear stress results are directly comparable. That is, any two or more cases may be matched. It is only necessary to

maintain constant flesh thickness in making comparisons. All computations are in the inch-pound system. Shear stress values are normalized in terms of load and breadth; values presented are proper for a load of 1 lb. and a breadth (into the paper, Fig. 1) of 1 in. To obtain the shear stress in a case of interest, it is necessary to multiply the shear stress value taken from any curve by P and divide by the appropriate breadth. Thus, if a value of interest is given as 0.1, and an estimated load of 100 lb. is applied over a 2-in. breadth (or 50 lb. per inch), the true shear stress is 5 lb. per square inch.

In the following figures and sketches, deflection is shown frequently. For the sake of clarity, deliberate exaggeration of the deflection is employed. Do not draw any inference from the deflection magnitudes depicted; only the numerical values contained in the figures or from the equations have value. A further warning: while the ordinates of the

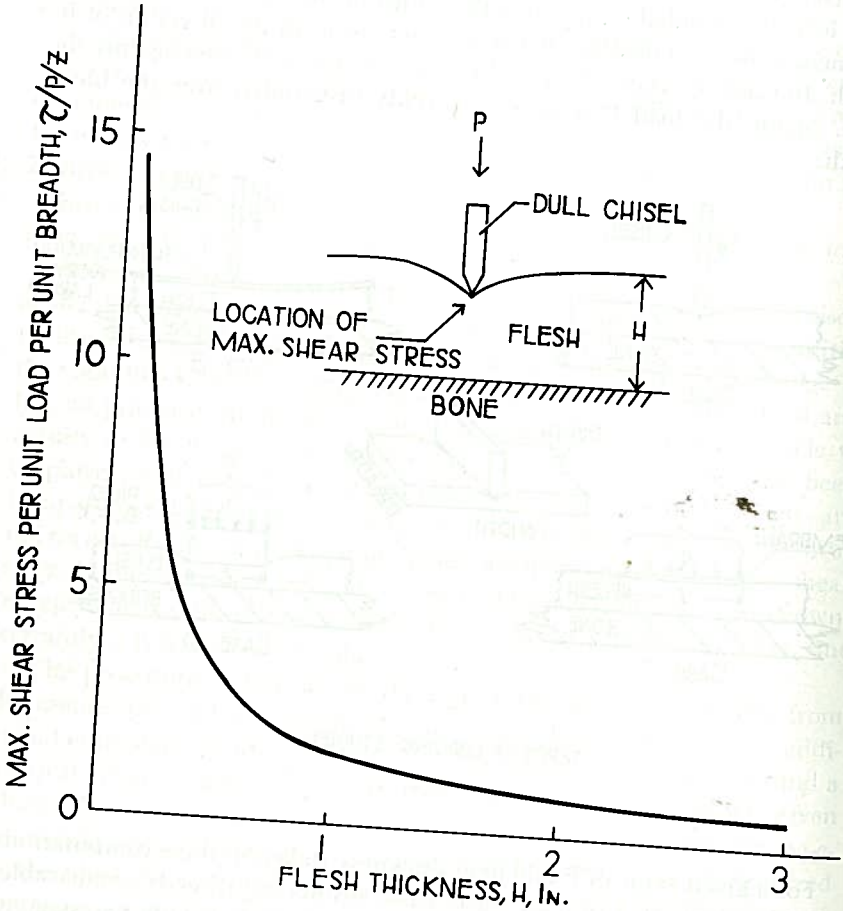

FIGURE 2

various figures have the same term, the scale changes. Finally, the abscissas reflect different terms. A pictorial representation of each abscissa is given on the appropriate figure.

Detailed Results

Case A. Dull Chisel (*see Fig. 2 and 3*). The variation of maximum shear stress with flesh thickness is given in Figure 2. The physical position examined is immediately under the chisel edge. Note the very large values of shear stress obtained as the flesh thickness H decreases. The skin over bony prominences would appear particularly vulnerable to shear failure. The distribution of maximum shear stress values with horizontal distance away from the chisel is given in Figure 3 for two different (but relatively substantial) values of flesh thickness H (1 in. and 3 in.). Shear stress values decay to negligible values in about 2 in. of horizontal traverse. Consequently, appreciable shear stresses exist out to at least an inch away from the dull chisel contact point. Note that the thinner flesh results in much higher shear stresses near the chisel, though they decay more rapidly with distance than in thicker flesh.

Case B. Dull Chisel on Protective Cover (*see Fig. 4*). The effect of inserting a thin plywood (1/16 in.) cover between the flesh and the dull chisel is to reduce the maximum shear stress by more than one order of magnitude (from 1.6 to 0.12) in the case of a 1-in. thickness of flesh. A smaller reduction (to about one quarter) is obtained in the case of the 3-in. flesh thickness. Introducing a greater thickness of cover (¼ in.) with greater rigidity produces a further decrease in flesh shear, to the point where negligible values are approached under the cover.

The distribution of shear stress with respect to horizontal distance is altered considerably by the presence of the cover. Note that in contrast to the unprotected dull chisel of Case A, the maximum stress value is *not* experienced directly under the load, which is stationed at X = O, but at some distance from the point of load application. As the cover thickness and stiffness increase, the point of maximum stress shifts further away from the load center. Flesh under the thin cover goes to zero shear stress in less than 3 in. from the load center. It is interesting to note that the thin cover curves indicate a slight negative value at the 3-in. point. This condition is not real; the negative value presumably reflects the separation of the cover from the flesh owing to dishing (sometimes known as "oil canning") of the cover. The thicker more rigid plywood does not experience this effect within the range studied.

Case C. Membrane Loading (*see Fig. 5*). A single membrane of 4 in. width has been analyzed for two values of flesh thickness (1 in. and 3 in.). The plot shows maximum shear values as a function of traverse across the width, both under and beyond the membrane. The plot is symmetrical about the load centerline. The peak value, experienced at the mem-

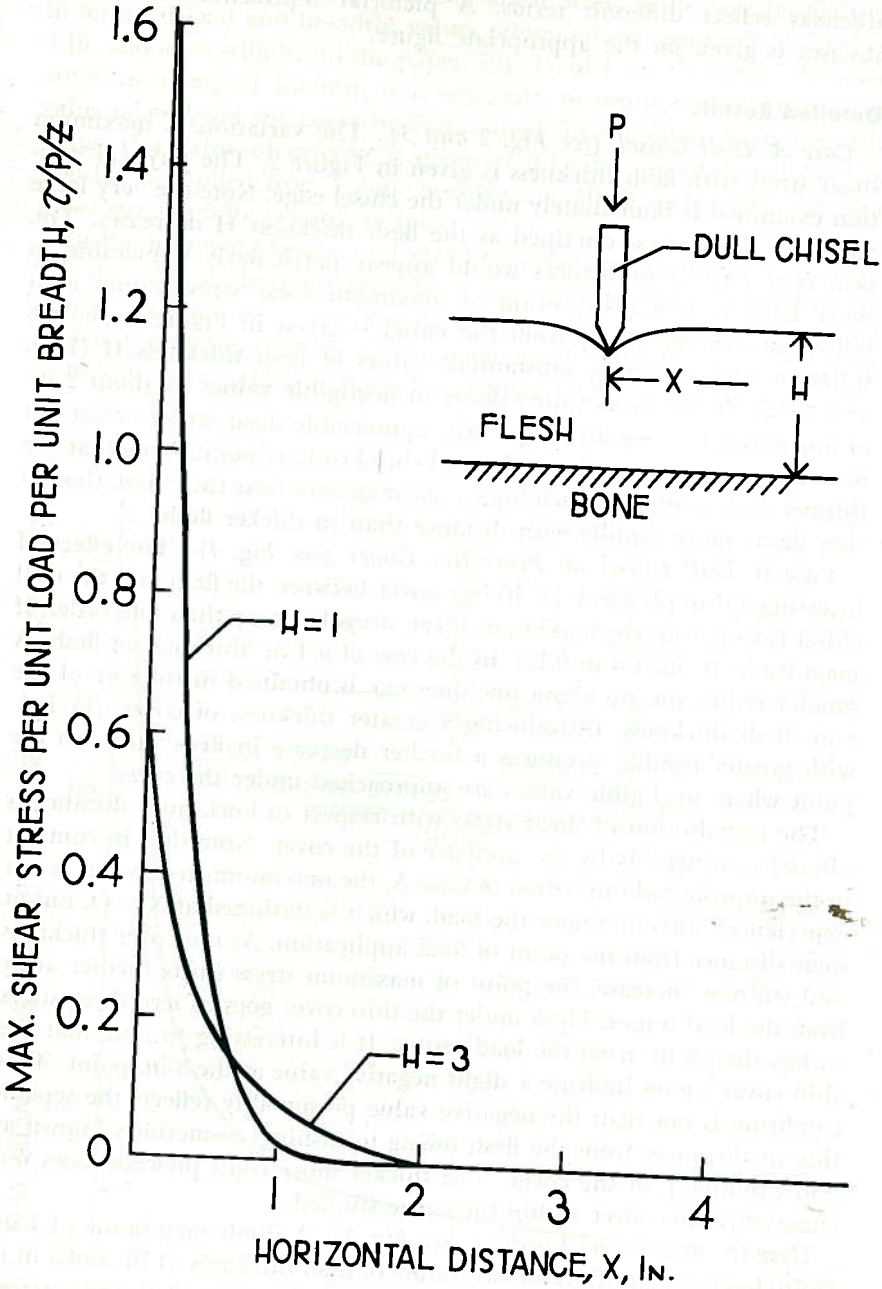
1.6
1.4
1.2
1.0
0.8
0.6
0.4
0.2
0
MAX. SHEAR STRESS PER UNIT LOAD PER UNIT BREADTH, τ/P/z
H=1
H=3
1
2
3
4
HORIZONTAL DISTANCE, X, IN.
P
DULL CHISEL
X
H
FLESH
BONE

FIGURE 3

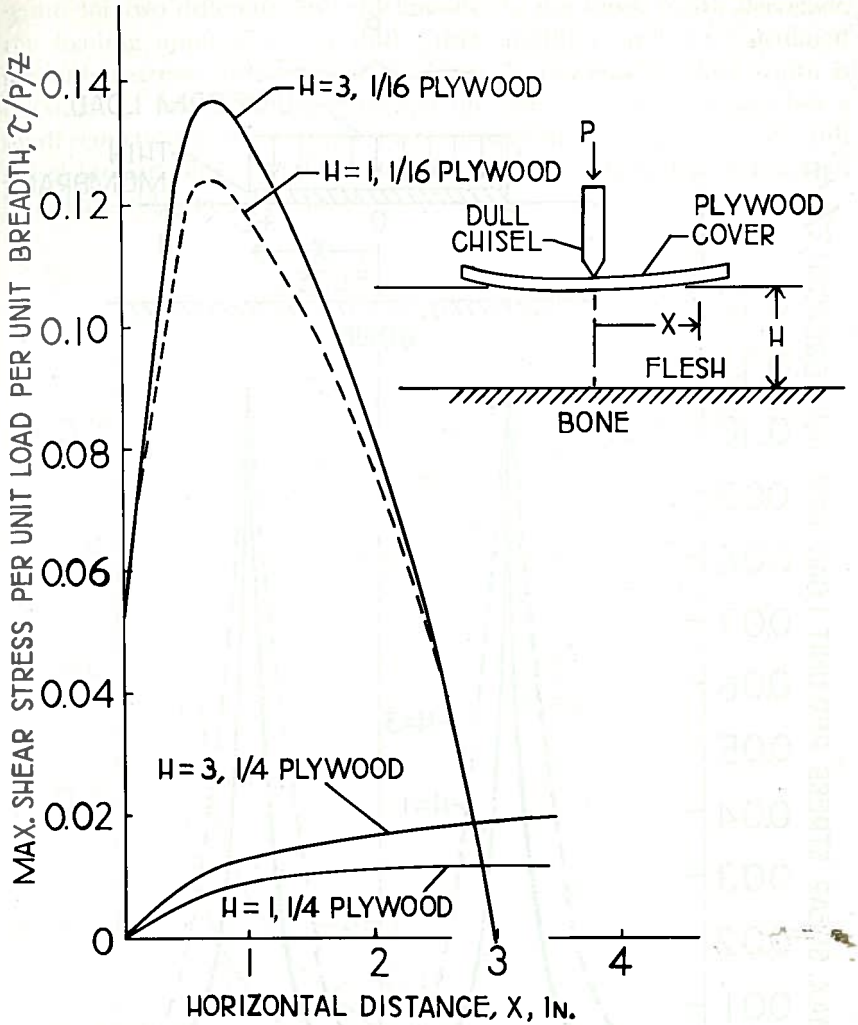

FIGURE 4

brane edge, is roughly comparable in magnitude to the dull chisel-thin cover combination. Note that the shear values *beyond* the edge are mirror images of these values experienced under the membrane and that appreciable stresses exist for almost 1 in. beyond the membrane. The concentration of shear near the membrane edge, given an evenly distributed load, suggests that a weave-permitting membrane yielding near the edge may be more comfortable to wearers of corsets, bandages, etc. A combination of the thin plywood case and the membrane (perhaps equivalent to a flexibly boned corset) might distribute loads broadly with lower peaks than in either case analyzed.

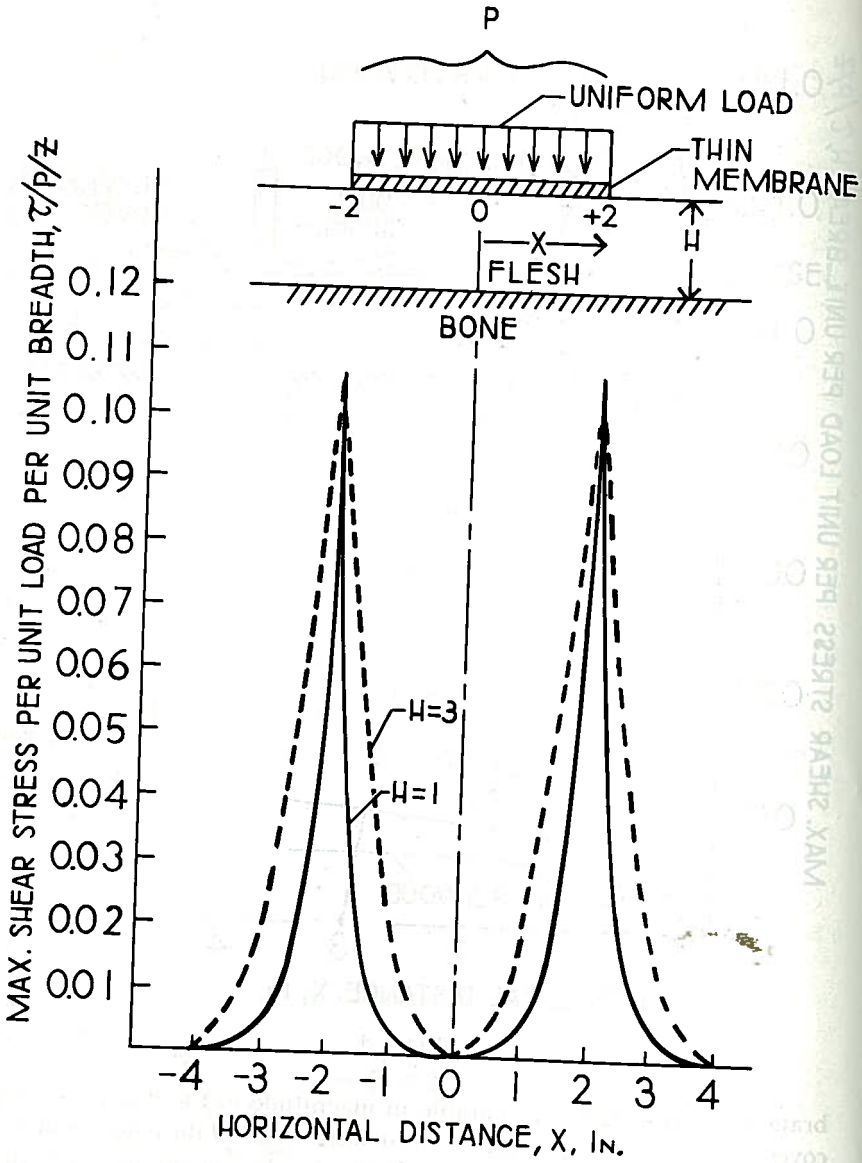

FIGURE 5

Case D. Rigid Block Loading (see Fig. 6). As indicated in the Introduction, the only shear stress results available in this case are those of maximum values. No comment on location is possible except to indicate that the maximum value will occur at the block edge or beyond it. Figure 6 contains maximum shear stress values as a function of the block half-

width for two different flesh thicknesses. As the block width decreases, the loading approaches the dull chisel condition and the calculated maximum stresses increase rapidly. Once an appreciable block width is obtained (a few inches) any further increase in width produces but a small reduction in stress. Stress levels throughout are high; only the dull chisel on bare flesh (Case A) produces higher values than a block of 9 in. half-width or 18 in. total.

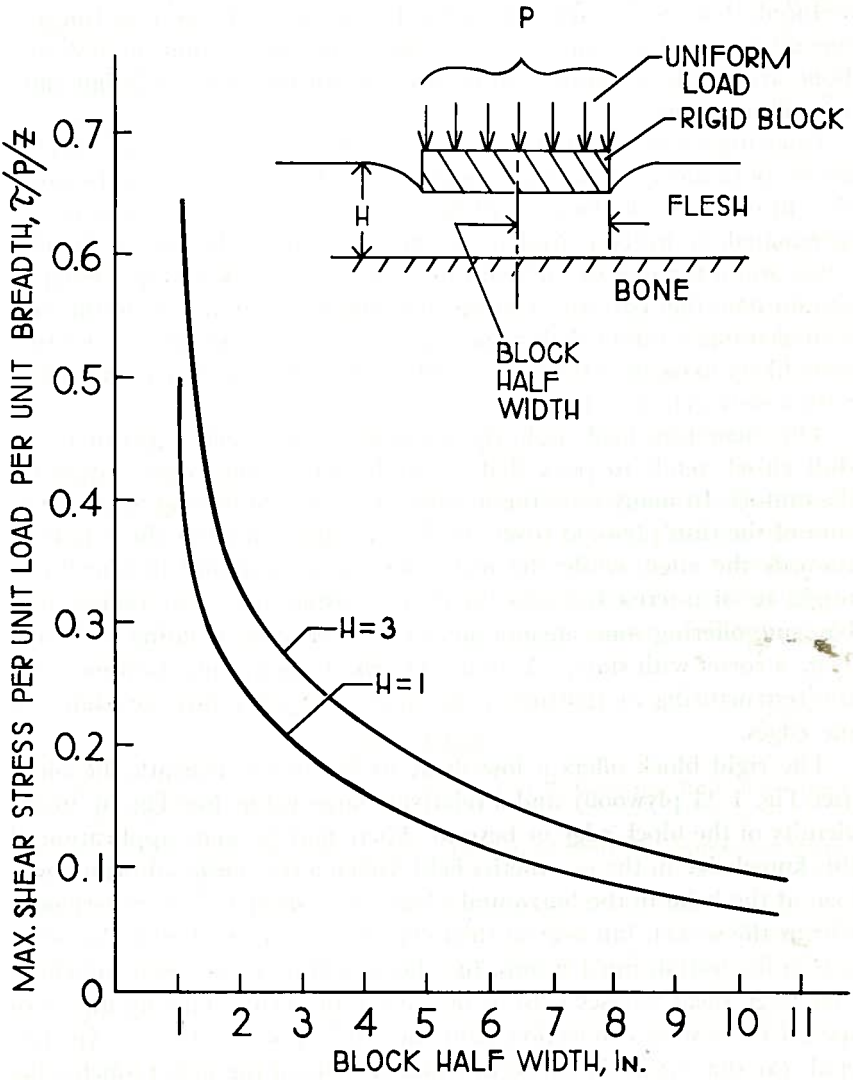

FIGURE 6

DISCUSSION

We have each experienced soft tissue damage through shear failure in a simple form—the cut. Designers are thus intuitively aware of the factors entering into "the blunt chisel on bare flesh" case and take suitable precautions to prevent such trauma when specifying attachment means for prostheses and braces. Therefore, the bulk of the results presented from studies of Cases A and B are probably "well known" to the reader, albeit on a less-than-rigorous level. Still, certain of the results are worth noting. One is the rapid rise in maximum shear stress as flesh thickness is reduced. The rise is hyperbolic with decreasing thickness (*not* linear as one might intuitively suppose). It follows that thin sections of flesh over bone are highly susceptible to failure and warrant special design effort to prevent shear.

Inserting a cover plate between the load and the flesh is an effective means of reducing shear stress, as expected. However, it should be noted that in doing so, the location of the maximum shear stress, now greatly attenuated, is shifted considerably (about ¾ in. in the case of the thin cover and a number of inches in the case of the thick cover). Designers should note that covering a sharp edge may result in a shift in the location of trauma, rather than a complete cure. This result may be particularly likely to occur if the transferred point of maximum shear coincides with a thin section of flesh.

The membrane-load-application system, while clearly superior to the dull chisel, tends to peak sharply at the membrane edges, suggesting discomfort. In many ways the membrane cover results suggest an inversion of the thin plywood cover results; i.e., the thin cover shear falls off towards the edge, while the membrane shear increases drastically. It might be of interest to assess the characteristics of a compromise member, one offering some membrane action plus some bending resistance (e.g., a corset with stays). A second possibility deserving examination is the restructuring or refitting of membranes to offer little resistance at the edges.

The rigid block offers a low shear stress directly beneath the block (see Fig. 4, ¼ plywood) and a relatively large value (see Fig. 6) in the vicinity of the block edge or beyond. There may be some application of this knowledge in the prosthetics field. Given a conventional brim and a load at the brim in the horizontal plane, little shear will be experienced within the socket, but a great deal experienced at or beyond the brim, within the unrestrained stump. In other words there is reason to believe that large shear stresses exist at or outside the brim. This finding is of special interest in connection with the clinical observation of Allende, et al. (5) that "cysts do not occur where the rim of the socket touches the skin—the point of maximum impact and friction—and therefore are

apparently not caused by direct friction, which tends, rather to produce abrasion. Instead, the cysts are often found about 1 to 2½ in. above the rim. It is in this area, the inguinal fold and adductor area in above-knee amputees and the popliteal area in below-knee amputees, that a poorly fitting prosthesis may induce formation of a roll of flesh, and the cysts are apt to develop in this roll when it is present. The area of the roll is particularly subject to shearing forces." While it is beyond the scope of this paper to comment on the association of shear and cyst formation, it seems mathematically correct that considerable shear stress exists in the zone of likely occurrence given in the above quotation and little within the socket. It would also appear that the shear stresses in this zone can be controlled by design of socket brim curvature and stiffness. It may be useful to attempt such a socket design—one in which peak shear stresses are diminished.

FUTURE STUDIES

It is anticipated that further mathematical studies will be made of a rigid block with a rounded corner analogous to the typical flared edge of a prosthetic socket. Experimental studies of gels loaded in the ways described may also be attempted. It is hoped that readers will critically analyze their clinical experiences in the light of these analyses.

ACKNOWLEDGMENTS

This work was supported by the Research and Development Division, Prosthetic and Sensory Aids Service of the Veterans Administration. Dr. Eugene F. Murphy, of that organization, contributed a number of useful suggestions while serving as project monitor. He has also provided the source material (1), in the form of a powerful intuitive argument, to which this analysis is addressed.

REFERENCES

1. Murphy, E. F.: Transferring Load to Flesh, Part I. Concepts. Bull. Pros. Res., BPR 10–16:38–44, Fall 1971.
2. Bennett, L.: Transferring Load to Flesh, Part II. Analysis of Compressive Stress. Bull. Pros. Res., BPR 10–16:45–63, Fall 1971.
3. Vlasov, V. Z. and N. N. Leontev: Beams, Plates and Shells on Elastic Foundations, Moscow, 1960. Translated as NASA TT–F–357. Available Clearing House for Federal Scientific and Technical Information, Springfield, Virginia 22151.
4. Timoshenko, S.: Theory of Elasticity. McGraw-Hill, N.Y. 1st Ed., 1934, p. 6.
5. Allende, M. F., S. W. Levy, and G. H. Barnes: Epidermoid Cysts in Amputees. Acta Derinato-Venerrologica, 43, 1963, p. 56.

APPENDIX

This appendix contains a complete derivation of the shear stress experienced in Case A, plus final expressions for the shear stress experienced in Cases B and C. These expressions are not known to appear elsewhere. However, the Case D solution is taken verbatim from Vlasov and Leontev (3) and will not be repeated here.

It is assumed that the reader is familiar with the theory of elasticity. Nomenclature employed here is given in a prior paper (2), as are equations (1) through (23).

We are considering a two-dimensional or plane stress situation. Useful shear stress relationships, taken from the theory of elasticity, and given previously as equations (1) and (2) are as follows:

$$\tau_{xy}=\tau_{yx}=\frac{E_o}{2(1+\nu_o)}\epsilon_{xy} \quad \text{from (1)} \qquad (24)$$

where

$$E_o=\frac{E_s}{1-\nu_s^2},\ \nu_o=\frac{\nu_s}{1-\nu_s} \quad \text{from (2)} \qquad (25)$$

$$\epsilon_{xy}=\frac{\partial u}{\partial y}+\frac{\partial v}{\partial x} \quad \text{from (2)} \qquad (26)$$

Empirical observations suggest that the first term on the right-hand side of equation (26) is generally an order of magnitude lower than the second term on the right-hand side. Consider the first term negligible. Then, combining terms,

$$\tau\equiv\tau_{xy}\equiv\tau_{yx}=\frac{E_o}{2(1+\nu_o)}\left(\frac{\partial v}{\partial x}\right) \qquad (27)$$

that is, horizontal shear <u>must</u> equal vertical shear. Hence, we shall now refer only to shear, without considering direction. Further, the shear stress is proportional to the rate of change of vertical deflection with horizontal traverse.

In general

$$v\ (x,y)=V_1\ (x)\ \psi_1\ (y) \qquad (9)$$

where v has been separated into x and y dependent functions. As we are interested in the maximum value of the shear stress, we will use the maximum value of $\psi_1\ (y)$, which can be shown, from examination of equation (17), to equal one. Therefore

$$v\,(x, y)_{max} = V_1\,(x)$$

and

$$\tau_{max} = \frac{E_o}{2\,(1+\nu_o)}\left[\frac{\partial V_1\,(x)}{\partial x}\right] \qquad (28)$$

The above expression is basic for shear solutions; it remains to insert the appropriate partial derivative for each given case. In Case A, a solution for v(x,y) has been given previously as equation (18). Extracting the component of interest we have

$$V_1\,(x) = \frac{3\,(1-\nu_o)^2}{\sqrt{6\,(1-\nu_o)}}\,\frac{Pe^{-\alpha x}}{E_o}\,\frac{1}{\psi_t\psi_\alpha} \qquad (29)$$

where α, ψ_t and ψ_α are given in equation (19). Taking the partial derivative and substituting in equation (28) we have

$$\tau_{max} = \frac{3}{2}\,\frac{Pe^{-\alpha x}}{\psi_t\psi_\alpha H} \qquad (30)$$

which is the final expression for the maximum shear stress developed under Case A conditions.

A similar procedure applied to Case B yields

$$\tau_{max} = \frac{(1-\nu_o)\,Pe^{-\bar{\alpha}\eta}\sin\bar{\beta}\eta}{4\bar{\alpha}\bar{\beta}\,L} \qquad (31)$$

where $\bar{\alpha}, \eta$, $\bar{\beta}$ and L are defined immediately following equation (21). The above expression equation (31), is the final expression for Case B studies.

A similar procedure applied to the membrane loading condition (Case C) yields the following final expression.

$$\tau_{max} = \frac{P\sqrt{6\,(1-\nu_o)}}{\mu\,(b-a)}\left[e^{-\alpha(x-a)} - e^{\alpha(x-b)}\right]$$

This particular expression holds for flesh locations under the membrane. Certain variations (sign changes) are required to solve for that flesh beyond the membrane. Constants are defined immediately following equation (22).