THE USE OF ELECTRICAL TRANSDUCERS IN THE MEASUREMENT OF BODY MOTIONS

Richard W. Cummings
Principal Electronics Technician

Larry W. Lamoreux, Ph. D.
Assistant Research Engineer

Biomechanics Laboratory
University of California, San Francisco and Berkeley
San Francisco Medical Center
San Francisco, California 94122

INTRODUCTION

Students of human locomotion have been making use of currently available technology for almost 150 years. Beginning with the classic studies by the brothers Weber in the 1830's, many of the best-known works in the literature on human locomotion have been produced by men such as Marey and Carlet, Braune and Fischer, Bernstein, and members of the Prosthetic Devices Research Group at the University of California, who were active experimenters capable of applying the technology of their times in imaginative ways to the measurement of human walking.

In the last few decades, a dramatic flowering of electronics technology has taken place which is providing a multitude of hitherto unknown opportunities for innovation. A number of relatively low-cost tools are currently on the market which make available, to the researcher of modest means, techniques that just a few years ago were feasible only for large, well-funded organizations, or were not available at all. In more and more fields, electronic instruments are becoming the standard tools for measuring, recording, displaying, and processing information. For example, the oscilloscope is rapidly becoming the basic instrument of experimenters throughout the physical sciences, much as the engine lathe has long been the fundamental power tool of the machinist.

Any attempt at rehabilitation of patients with locomotor disabilities quickly makes clear the importance of techniques for evaluation of locomotor performance. In determination of the nature and significance of a disability, in measurement of a patient's progress, or in evaluation of the functional effectiveness of corrective or assistive devices, techniques for assessing performance and recognizing small changes in

performance are very valuable. It is not surprising, therefore, that electronic measurement techniques are increasingly being applied to the study of human locomotion.

Many natural and human phenomena are electrical to begin with, and the employment of electronic devices to study these phenomena hardly needs an explanation. The usefulness of electronic instruments goes far beyond the study of electrical phenomena, however, because of the concurrent development of many different types of electrical-output transducers. These are devices which convert such variables as displacement, velocity, acceleration, force, pressure, torque, temperature, magnetic field strength, light intensity, and many others, into electrical signals which are proportional in magnitude to the original variables. These devices are largely responsible for the great usefulness of the oscilloscope and of numerous other common electronic instruments in many different fields of study.

In the study of human walking and running, experimental measurements of both normal subjects and of subjects with pathological conditions have long been an indispensable source of factual data. For about the last hundred years, the most widely used measurement techniques have involved some form of photography, such as the multiple, sequential still photographs by Muybridge, multiple exposures on stationary film by Marey and Fischer, multiple exposures on moving film by Bernstein, and cinephotography by countless researchers throughout the world.

For recording a qualitative or subjective image of the total walking phenomenon, cinephotography or television recordings are unsurpassed. It is even possible to measure, frame by frame, the images on the cine film in order to obtain numerical measurements of some of the more obvious body motions. This process is very tedious and time-consuming, however, and more efficient measurement techniques are often possible. If the measurements of interest are limited in number to a few specific variables, such as joint motions, body motions, or floor-reaction forces, and if a visual image of the total phenomenon is not essential, it is usually possible to devise procedures which permit direct measurement of the variables of interest. Such direct measurements have distinct advantages for the researcher in that they eliminate the extensive, time-consuming data reduction required by photographic recording techniques, and thereby greatly reduce the time delay between the original collection of raw data and the interpretation of processed results.

As implied earlier, there are further benefits to the researcher if he can obtain his measurements in an electrical analog form. In a word, the advantage is versatility! An electrical signal can be recorded on magnetic tape for repeated playback; it can be amplified, filtered, integrated, or

differentiated; it can be displayed on many different devices, including oscilloscopes, strip-chart recorders, and X-Y plotters; and last, but by no means least, it can be fed into a computer quickly and economically, facilitating extensive processing of large quantities of experimental data.

An almost bewildering variety of measuring instruments with electrical outputs is currently available, and many of these instruments are capable of remarkable precision. Not surprisingly, this high performance is very often accompanied by high prices, which seem to put modern measurement technology out of the reach of modestly funded projects. Fortunately, the level of precision required for biological motion studies is not great by modern standards. There are now many economical transducers and amplifiers which are more precise than are the possible methods of attaching the measuring instruments to the experimental subject.

In the Biomechanics Laboratory the authors have developed several simple circuits for practical utilization of economical electrical-output force and motion transducers. These have proved to be very versatile, with a level of precision quite suitable for studies of the motions of walking. Compared with commercial equipment of comparable versatility, and no doubt superior precision, they are very economical. They were used in a computerized study of the kinematics of walking, which has been described in a previous article (1). A rather elaborate system of exoskeletal electrogoniometers was used in that project to obtain three-dimensional measurements of motions of the pelvis and the right hip, knee, and ankle joints of a normal subject walking on a treadmill at several different speeds. All of the measurements were obtained in electrical form. A discussion of the goniometers can be found in the previous article; the purpose of this paper is to describe in more detail the most practical transducers and circuitry used in the course of the project.

DESIGN CONSIDERATIONS

There are two very general categories of transducers, analog and digital. Digital transducers were eliminated very early because of their expense, size, weight, and extensive auxiliary equipment. The more common analog transducers perform the conversion to electrical form by one of the following:

1. charge generation
2. capacitance change
3. inductance change
4. voltage generation
5. resistance change

The first three transducer types were not chosen because of the rather extensive auxiliary electronic circuitry they required. The voltage

generating type of transducer was also unsuitable because it produced an output proportional to velocity and was not commercially available in rotary form.

Resistive transducers for low-frequency phenomena (d.c. to 50Hz) come in two common forms, strain gages and potentiometers. Strain-gage transducers usually produce an electrical output proportional to either acceleration or force, whereas potentiometers are usually more suited for angular or linear displacement measurement.

For the low-frequency signals involved in the measurement of body motions, the precision potentiometer has several advantages over other displacement transducers: Many physical and electrical sizes are readily available, and many of these are of low cost, accurate calibration is quite simple, and the auxiliary circuitry is uncomplicated.

The selection of a potentiometer suitable for our needs began with the consideration of the total angular motion to be measured. For angular measurements of less than 300 deg. the single-turn potentiometer is an obvious choice. Although single-turn precision potentiometers usually are capable of continuous rotation with a measurement range of about 350 deg., the extra range is quite useful because it eases the requirement for accurate mechanical "zero" setting and helps prevent loss of data if the expected angle is slightly exceeded. The lack of mechanical stops helps to prevent mechanical damage due to inadvertent large motions.

While the best linearity (0.01 percent) of angle input to electrical output is obtainable with wire-wound potentiometers, they are not ideally suited for the direct measurement of small angles (10 or 20 deg.) because of the finite resolution caused by the individual wires. An alternative is to accept a somewhat less linear (0.25 percent) potentiometer with the resistance element made from a conductive plastic material. For the measurement of small angles conductive plastic potentiometers have no discernible steps and may, in our experience with 10 units, be calibrated so as to yield a small-angle accuracy somewhat better than their specifications indicate. Deviations from a perfectly linear output occur gradually in the conductive plastic potentiometers, so that small segments of the potentiometer's rotation may be considered linear even if of a slightly different transduction value (input angle to electrical output) than the average for the potentiometer as a whole.

Excitation and Loading

Purchasing a high-quality potentiometer which is guaranteed by the manufacturer to be linear is not the only requirement for a linear angle-to-voltage transducer. To perform properly, the potentiometer must have a voltage applied across its resistive element, and this voltage

must remain constant to a precision better than the desired precision of measurement. In addition, the current flow in the moving arm of the potentiometer must be very small as compared with the excitation current.

A practical potentiometer resistance is 10,000 ohms. This is neither a high nor a low resistance value, and many potentiometers are available in this resistance as standard "off-the-shelf" items. A reasonable linearity tolerance appears to be 0.25 percent—linear enough to give good measurements but not excessively expensive.

If it is desired that the potentiometer nonlinearity be the only significant electrical source of measurement error, then a good rule of thumb is that the errors from other sources should be no greater than $1/10$ of the nonlinearity error. Power supplies with an output stability of ± 0.005 percent are available for a reasonable cost and can be used for the potentiometer excitation voltage supply. The loading nonlinearity error can be reduced to immeasurable proportions by feeding the potentiometer output into an amplifier with a high-input resistance and a low-output resistance. A suitably high-input resistance (100 megohms or greater) can be obtained from modern well-designed solid-state amplifiers, but some care in selection and use must be exercised. Because we want to be able to use many different types of resistive transducers and to interchange them with ease and rapidity, it was decided early during the design to make use of inexpensive operational amplifiers. The great advantage of operational amplifiers is the ease with which the amplifier system function may be changed. In order that this versatility might be easily and quickly utilized, a small plug-in card is associated with each amplifier, and the input and output connections are routed through these cards. In this way, once the appropriate circuitry is designed and placed on the cards, the function of each amplifier can be individually and quickly changed by changing plug-in cards.

Of the almost infinite number of possible amplifier circuits which might be useful, several have been found to be particularly simple and effective. These are described briefly below. For an excellent, detailed description of the theory and practice of operational amplifiers, see Philbrick/Nexus Research (2). In addition, a number of excellent publications on measurements and circuits are available from Tektronix, Inc.; see, in particular, Biophysical Measurements (3).

Signal-Conditioning Circuits

1. *Potentiometer Transducer Circuit (Fig. 1)*

The input amplifier A_1 is connected as a "voltage follower" to achieve a very high-input resistance with no change in amplitude or sign. The

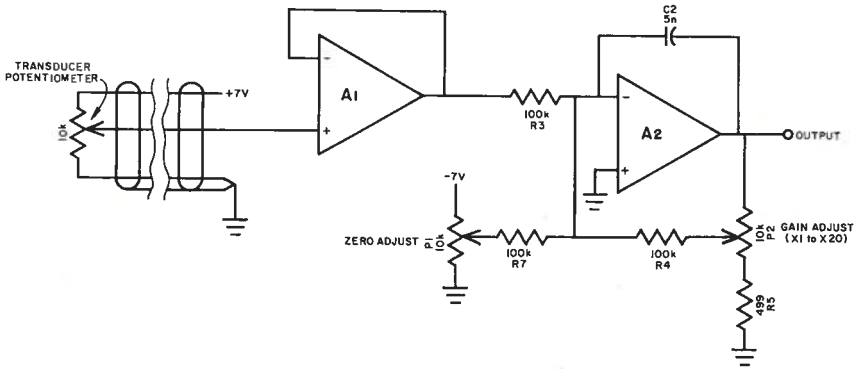

FIGURE 1.—Potentiometer amplifier circuit. A_1 and A_2 are operational amplifiers. Power supply connections are not shown. Component values in this and other figures are those used by the authors and are suitable for low-frequency signals in the range 0 to 50 Hz. For additional details see Philbrick/Nexus Research (2).

signal from amplifier A_1 is 3.5 v. when the potentiometer is centered, and varies about that value when the shaft is rotated on either side of center. The required full-scale input to the tape recorder was ± 2 v., or a total range of 4 v. For small angular inputs to the potentiometer the output voltage range will be considerably smaller than 4 v. Consequently, the output of A_1 must be shifted to vary about 0 v. instead of 3.5 v., and for measurement of small angles this shifted output should be amplified to make full use of the tape recorder input range. Both of these operations are accomplished in amplifier A_2, which is connected as a variable-gain inverting amplifier with summing inputs. A zero-adjusting voltage of about -3.5 v. from a 10-turn potentiometer, P_1, is added to the output signal of A_1 to obtain from A_2 the desired output consisting of variations about 0 v. The gain is adjusted by changing, with potentiometer P_2, the percentage of the output used for feedback. Resistor R_5 prevents setting the gain so high that instability and noise become problems. P_2 is a 10-turn potentiometer with a turns-counting dial for resettability. Capacitor C_2 provides low-pass filtering, which removes any noise higher in frequency than the desired signals.

2. *Bridge Transducer Circuitry (Fig. 2)*

Amplifier A_1 amplifies the *difference* in voltage between the b and d corners of the bridge. Resistors R_8 and R_9 serve to reduce the current through the bridge resistors to the value specified by the manufacturer. R_{10} reduces the sensitivity of the "zero" control, allowing easy adjustment for zero output with zero input to the transducer. Amplifier A_2 operates as described for the potentiometer transducer electronics, with

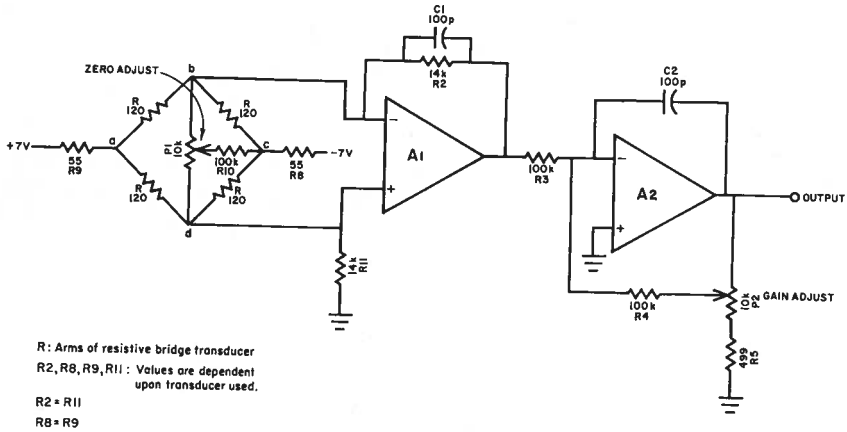

FIGURE 2.—Bridge amplifier circuit. Component values are for a strain-gage transducer with R = 120 ohms.

the exception that the level-shifting circuitry (zero adjustment) has been removed.

3. *Voltage Input Circuitry*

When the available signal is a voltage from a low-resistance source, the signal-conditioning circuitry may be arranged to amplify the signal with or without inverting it.

a. *Amplification and inversion (Fig. 3).* This is the variable-gain amplifier used in the previous two circuits. The input resistor R_3 can be raised in value if an input-to-output voltage reduction is desired (2).

b. *Amplification only (Fig. 4).* By placing an inverting amplifier with a gain of 1 (A_1) before the inverting amplifier with variable gain (A_2), the combination inverts twice to become a noninverting variable-gain amplifier system.

This signal conditioning equipment was intended to be used with a seven-channel analog tape recorder. Consequently, seven pairs of operational amplifiers were placed in a chassis along with their associated plug-in card sockets and a power supply (Fig. 5). The plug-in cards shown in Figure 6 were constructed to permit rapid changes between several desired amplifier circuits. The two potentiometers ("zero" and "gain") associated with each channel of amplification were placed on the front panel. The remaining front panel controls are the power switch, the pilot light, and the output selector (Fig. 7). This switch operates relays which place on the output connector either the normal output signals or reference voltages which are used for alignment of the

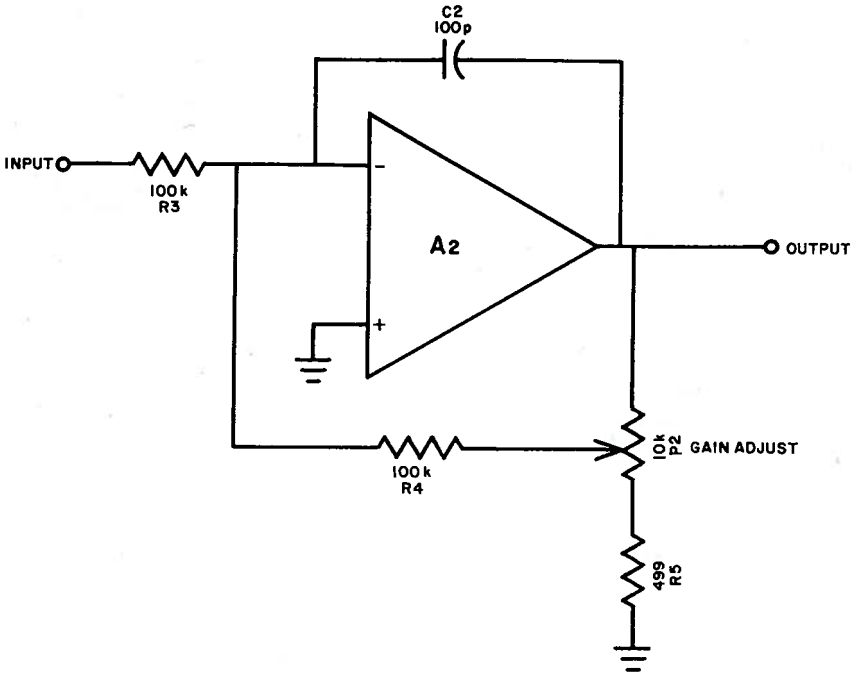

FIGURE 3.—Inverting amplifier circuit.

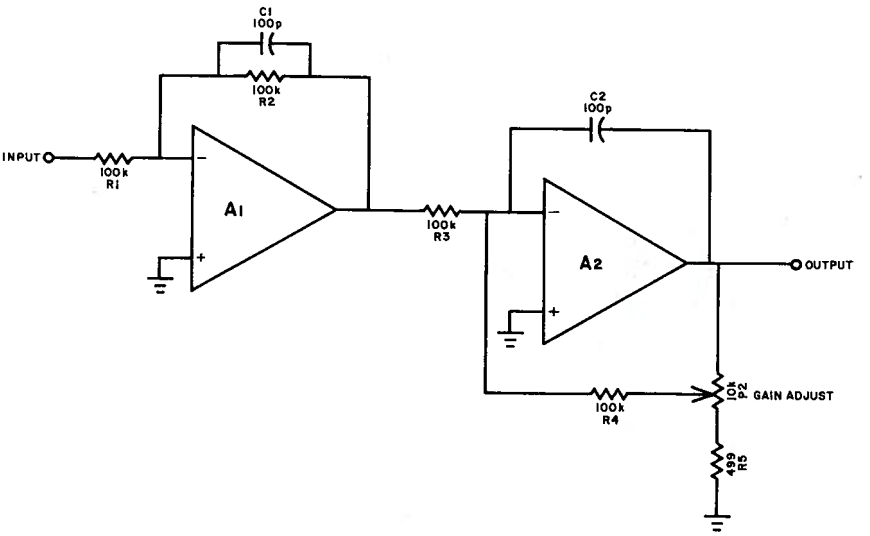

FIGURE 4.—Non-inverting amplifier circuit.

FIGURE 5.—Signal conditioner interior.

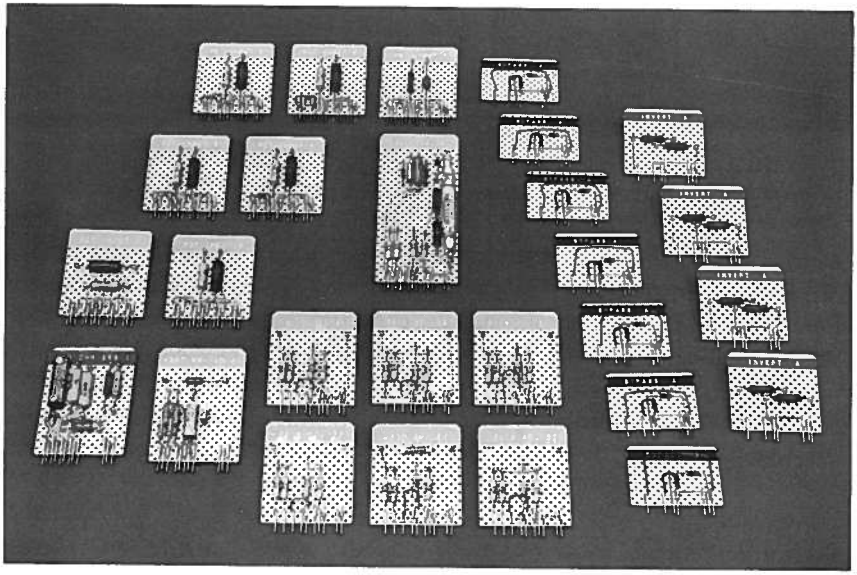

FIGURE 6.—Amplifier plug-in cards.

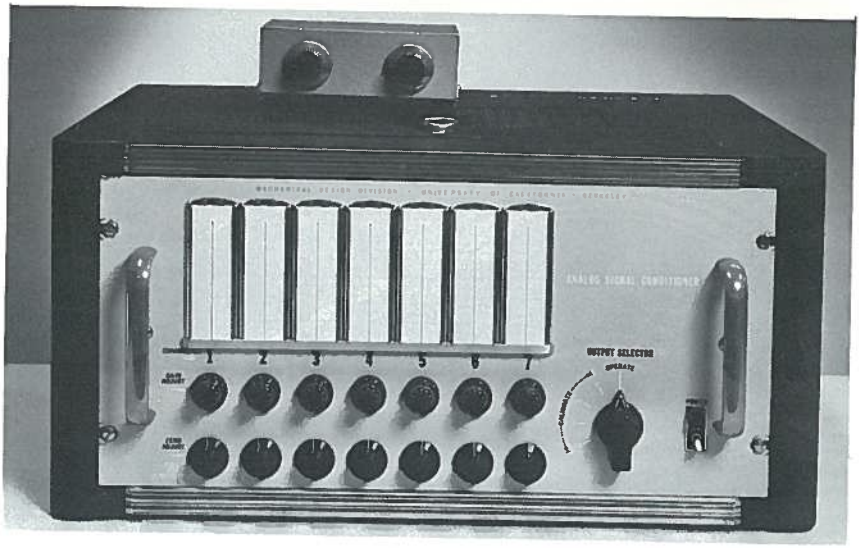

FIGURE 7.—Signal conditioner, front view.

tape recorder, for calibration of the transducers, and for transfer of calibration to the computer.

The available tape recorder had a 45 dB signal-to-noise ratio, which means that the maximum accuracy of the played-back data can be no better than 0.561 percent of full scale. For maximum signal-to-noise ratio, the gain adjustment of each amplifier channel was used to make the signals as large as possible in relation to the unavoidable noise, without exceeding the specified maximum linear input voltages of the tape recorder.

Calibration

After considerable thought an easy-to-use calibration scheme was devised for angular measurements using potentiometers. The potentiometer is placed in a mechanical calibration fixture (Fig. 8) and adjusted for zero angular input. The amplifier channel "zero" control is adjusted for 0 v. output. The potentiometer shaft is then rotated with the fixture to the maximum rotation expected during actual measurements and the amplifier "gain" control adjusted for 2 v. output. The potentiometer is next adjusted for maximum rotation in the other direction and the output checked. It should be and usually was −2 v. Measurement of the output voltages with a simple voltmeter was error-prone and could not provide the desired precision of calibration. Consequently, a comparator amplifier was constructed which compared the potentiometer output with known reference voltages.

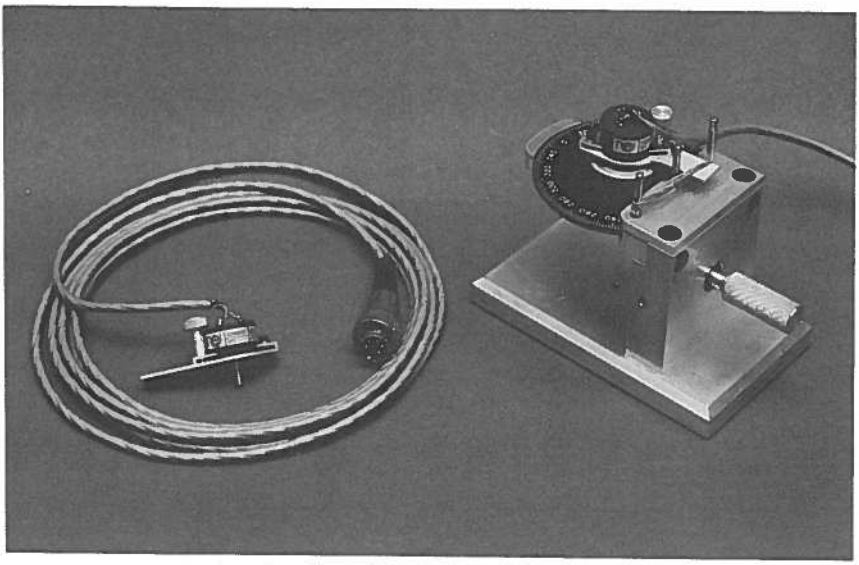

FIGURE 8.—Potentiometers with calibration fixtures.

The comparator circuit operates as follows (Fig. 9): Assume that an amplifier output voltage is connected to input 1 and a reference voltage of −2.00 v. is applied to input 2. Amplifier A_3 amplifies the difference between these two inputs and displays it on the meter. As long as $R_{12} = R_{13}$, a zero output from the amplifier indicates that input 1 and input 2 are equal in amplitude and opposite in sign. The potentiometer output has then been matched with the reference voltage. The ratio of R_{12} and R_{13} to R_{14} establishes the maximum amplifier gain. The output of the amplifier will not exceed 1 v. because of diodes D_1 and D_2. These diodes begin to conduct at about ½ v., and the amplifier gain is thereby reduced. This prevents damaging the meter if the two amplifier inputs differ greatly. The meter is indicating the difference between an accurately known standard and the voltage being set. Consequently, the desired output is 0 v., and a sensitive meter can be used to obtain very precise calibration. An alternate way of explaining this circuit is to view the diodes as variable feedback elements which give an amplifier gain that becomes smaller with increasing signals.

The zero-center-variable-sensitivity meter eliminates lead changing and range changing, while the comparison technique allows the meter indication to be the same for all three parts of the calibration procedure. Our experience has shown this system to be both faster and much more accurate than a conventional voltmeter.

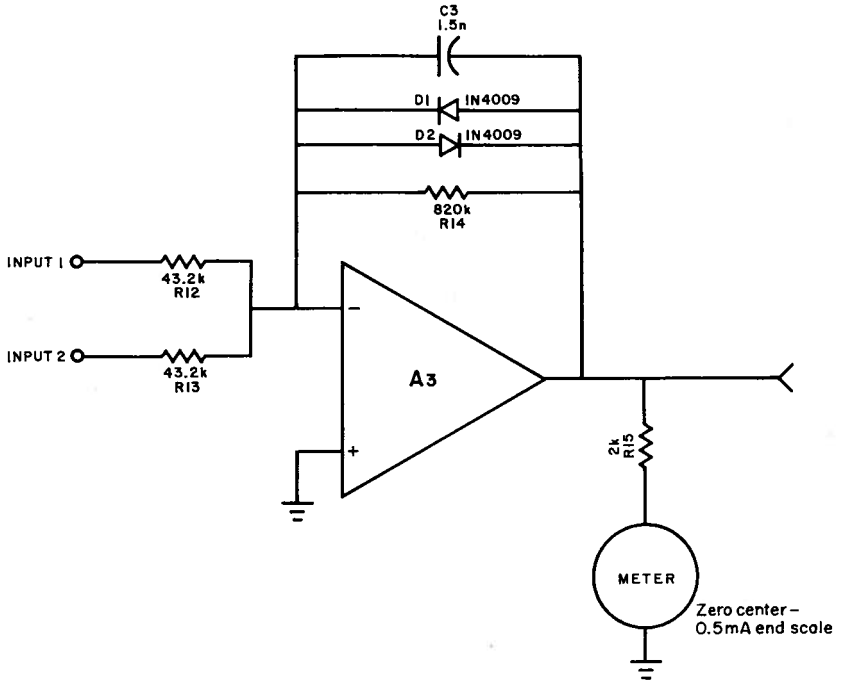

FIGURE 9.—Comparator circuit.

Reference Voltage

The reference voltage used with the comparator could have been obtained from a voltage divider or a separate power supply. The separate power supply would have operated properly but was too expensive. A voltage divider would have been too sensitive to the amount of current drawn by the load (it would act exactly like a potentiometer used for measurement, with the exception that the tap is not movable). Since operational amplifiers were much less expensive than a separate power supply, the potentiometer circuit (Fig. 10) previously described was used. The reference voltages are set to ± 2.00 v. using P_3 or P_4 and a voltmeter of ± 0.01 percent accuracy. Resistors R_{16}, R_{17}, R_{18}, and R_{19} are wire-wound resistors of 0.1 percent accuracy. This accuracy is not essential but is intended to provide long-term stability. The potentiometer used is a ten-turn cermet element trimmer potentiometer with a low-temperature coefficient.

To insure uniformly low-contact resistance in the switch, a unit with a very thin gold flash (3×10^{-5} in.) was specified. Other common rotary switch contact materials sooner or later begin to give trouble in low-

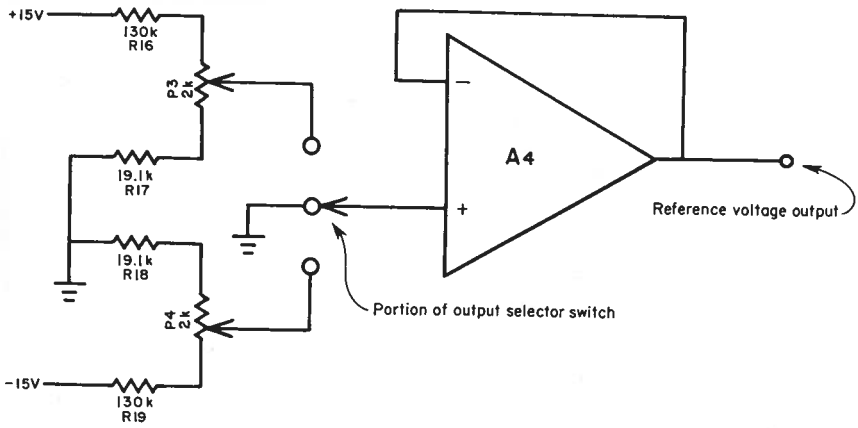

FIGURE 10.—Reference voltage circuit.

current, low-voltage switching applications. The ±15 v. power supplies are very well regulated (±0.005 percent), and the amplifier introduces very little error, so that over a 2-year period the reference voltages have remained constant within ±0.005 v. of 2.000 v. These same ±15 v. power supplies provide power to all of the amplifiers in the signal conditioner. The ±7 v. transducer excitation voltages are provided by separate supplies.

CONCLUSIONS

The equipment described was placed in a small cabinet along with the required power supplies and is a self-contained, portable, laboratory, quality instrument (Fig. 5 and 7). The time spent in designing and building this instrument was considerable, but the effort has been well rewarded.

In projects where funding is no problem, there probably is very little justification for building one's own instrumentation where commercial equipment is available to perform the desired function. In projects with limited budgets for instrumentation, home construction may be worth considering. There then is a temptation to build simple, special-purpose devices suitable for one job only. Indeed, the researcher of modest means who seeks to measure only a few simple variables, perhaps as part of a project in the evaluation of patient progress or the function of some experimental prosthetic or orthotic device, may well question the need, or even the desirability, of starting out with a measurement system, such as the one described here, which is suitable for sophisticated computer studies. The authors faced these same questions, and certainly have never had cause to regret the extra effort expended in the develop-

ment of precise and versatile equipment. On the contrary, their experiences indicate that versatile instrumentation begets flexibility in experimentation, and that flexibility can be a great asset in the study of a process as variable as walking.

REFERENCES

1. Lamoreux, L. W.: Kinematic Measurements in the Study of Human Walking. Bull. Prosthetics Res., BPR 10-15:3-84, Spring 1971.
2. Applications Manual for Operational Amplifiers. Ed. 2. Dedham, Massachusetts, Philbrick/Nexus Research, 1966.
3. Strong, Peter: Biophysical Measurements. Beaverton, Oregon, Tektronix, Inc., 1970. Part No. 062-1247-00.