CONTROL OF AN ARTIFICIAL UPPER LIMB IN THREE DEGREES OF FREEDOM[a]

Daniel Graupe, Ph. D.

Department of Electrical Engineering
Colorado State University
Fort Collins, Colorado 80521

SYNOPSIS

Reported below is work aimed at controlling an artificial upper limb in three degrees of freedom, namely arm bending, wrist rotation, and grasp, by utilizing toe movements for command actuation. The present design employs microelectronic logic and analog circuitry combined with position-reference-control (to be applied to d.c. motors or d.c. stepper motors) to accomplish the above control at will. The resulting design is shown to yield smooth and continuous positional, speed, and force control. It is shown that only one toe movement is required per each degree of freedom at the basic speed, and only two such movements are required when speed control is also employed. The logic design is further shown to overcome certain most-likely unintentional errors in performance. It is thus hoped that the present design will revive interest in the capabilities of toe control when microelectronic logic is employed. Extensions of this design to more than three degrees of freedom and to a hybrid control incorporating electronic logic and pneumatic final control elements are discussed, as is the incorporation of toe and EMG actuation.

1. INTRODUCTION

The problems involved in the design of the control of artificial limbs for amputees differ from one amputee to another. These problems depend on the place of amputation, the injury to other limbs and nerves, the psychological aspects of the patient's adjustment to any and to a specific artificial limb, his intelligence, and his adaptability to handling and to controlling an artificial limb.

A project as is presently reported does not intend to provide a general solution to all of the above problems. However, one still must and can formulate some general criteria for controller design. Ob-

[a] Based on work performed under VA Contract V101(134)P-79.

viously, the simpler the control inputs are, the easier the training problems become. Secondly, the more coordination achieved by simultaneous control of several degrees of freedom, the easier it is for the user to adjust psychologically to the prosthesis. These two factors thus lead to a general design criterion of aiming at the simplest control inputs that result in best performance in several degrees of freedom.

It is well known that many amputees reject their prostheses because they find them too complex in their operation (in the control actions the patients must make), in the resulting performance, and in the degree of coordination between their will (control) and the performance. The above problems are mainly problems of control (1). However, energy and weight problems also cannot be disregarded. The latter still is true in the present-day's state of art, when developments in microelectronic and micromotor hardware facilitate higher power and sophisticated performance with relatively light and compact equipment. Hence, although there is still much to be desired in developing lightweight hardware, the effort of the present research is directed mainly towards the control problem.

An important generalization in the control design problem may be accomplished if the controller is such that it can be incorporated into any type of prosthesis-actuation mechanism, i.e., in electrically actuated or pneumatically actuated limbs. The latter, when possible, requires mainly the utilization of different types of transducers between controller and actuator, and does not considerably affect the controller design.

The control problem may be broken down into three sub-problems as follows: a. the actuator or command source; b. the control logic; c. the final control element or mechanism with the related transducers, motors, transmissions, clutches, etc.

The present work concentrates on sub-problems a and b. It only briefly discusses sub-problem c, related mainly to the feedback position-control for sub-problem c, which is essential to the validity of any solution to sub-problem b.

The two fundamental approaches to the actuator sub-problem (a. above), are those where muscle movement is employed as a command source to the control system, and where the command is derived from EMG signals. The muscular-movement approach is the one chosen for the present design, since the employment of EMG signals for controlling several degrees of freedom of an artificial upper limb involves serious problems of reliability, due to difficulties that arise in the filtering of signals related to the various degrees of freedom (2, 3). Recent advances in filtering and estimation theory may eventually lead to satisfactory solutions in the detection, interaction, and interference

problems involved in utilizing EMG signals. It is felt, however, that the present technique may avoid these problems in a simple and inexpensive manner and provide reliable control in several degrees of freedom, without interactions, through training the amputee to move remote muscles (of toes) in order to achieve upper-limb control. It is thus hoped that the present approach is simple enough in terms of the operational decisions that the amputee is required to perform, so that the resulting performance is sufficiently smooth and responsive.

The present approach utilizes toe movements as command sources, as chosen by Alderson (4) for his prosthesis Model III-e in the early 1950's. The present approach differs, however, in the actuation procedure, in the resulting performance, and in the hardware from that described by Alderson, such that many of the shortcomings of Alderson's toe-actuated control (and as outlined by him in Ref. 4) may be overcome. The latter improvements need not cast any shadow on the excellent designs of Alderson, but could have been expected when considering the advancement in electronic logic hardware and analog hardware in the 20 years that have passed from the time of his design, these advances being related to the development in the digital computer and space technology from the early 1950's to 1972.

The present report does not claim to have optimally utilized all these recent developments. However, it attempts to use many of these, hoping to revive the concepts outlined by Alderson and to overcome shortcomings of his design. Furthermore, the present report hopes to make the point that the resulting toe-actuated (multi-degree of freedom) controller can provide an adequate, workable, and reliable answer within reasonable cost to the needs of above-elbow amputees, that may be in some cases beyond the capabilities of the present day's EMG-actuated controller.

The choice of the toes as control actuators has been made because of their maneuverability at will, and because their movement is well concealed (inside shoes), thus drawing little attention of other people and reducing a possible cause of embarrassment and psychological discomfort to the user. It is noted that the present design aims at controlled prosthesis operation mainly during sitting, standing, or lying down, namely when toes do not fill other tasks, thus not discomforting the user while walking. The design allows, however, for actuation by other muscles than toes, if required, such as by the small limbs of Thalidomide patients. Further, the longer the stump (the further down it is from the shoulder), the simpler the control becomes, and the fewer the number of degrees of freedom must be.

The major differences between the present design and that described by Alderson (4), are as follows: (i). The present design leads to a

continuous control of position, whereas only a discrete such control is obtained according to Reference (4), the latter being in terms of modules of motion. (ii). The present design further facilitates continuous speed or force control, which is not possible with the design of Reference (2). (iii). The present design requires essentially only one toe-action for each prosthesis degree of freedom at the fundamental speed, and only two when speed control is utilized, whereas Alderson's design requires up to a combination of three simultaneous toe and heel actions for a single prosthesis motion, without speed control. (iv). Due to (iii) and to the logic design itself, the most likely errors in decision by the amputee would not yield erroneous prosthesis movement since they are disregarded by the logic. (v). The utilization of microelectronics integrated circuitry reduces weight and power consumption of the controller, thus facilitating the realization of improvements (i) to (iv), as was impossible with the hardware available at the time of Alderson's design. (vi). The latter consideration also lies behind the utilization of a position-reference-controlled d.c. motor or stepper motor as the final control element. Obviously, the employment of d.c. stepper motors, with their excellent locking torque features and torque-to-volume ratio, was also not possible in Alderson's design. This may lead to a considerable reduction in weight by eliminating locking and transmission mechanisms, thus making the employment of one motor per degree of freedom feasible.

Details of the present logic design are given in the following sections of this report. We note that although the present design is mainly a logic design, analog control circuitry is also incorporated, and it is the combination of the logic and the analog circuitry that facilitates points (i) to (v) to be realized.

2. THE CONTROL FUNCTIONS AND THE CONTROL LOGIC

The present design is concerned with the controlling of three degrees of freedom, namely, arm bending, wrist rotation, and grasp. For the reasons given in the introduction, actuation of the control is performed by utilizing the most maneuverable toe movements, namely the up and the down movements of the right and the left big toe, and the down movement of the little toe of each foot. All movements above are to actuate on/off microswitches when enough pressure is produced by the appropriate toe. The above movements can be independently executed, and interactions are avoided, since usually one of the movements is not sufficient to unintentionally actuate a switch that should be actuated by another movement. It has already been mentioned in the introduction that since unintentional switching by toe movements may take place during walking, and since the utilization of arm

movements is not usually essential while walking, the present design freezes the controls while walking. It, therefore, provides toe control only while the amputee stands, sits, or lies down. Further elimination of certain interactions is discussed in Section 5.

2.1 The Functions of the Control Logic

The major command functions versus the respective toe movements are tabulated as shown in Table 1. These are utilized by the logic hardware and via analog integration and position control circuitry to yield the overall prosthesis control.

TABLE 1.—*Command Functions for Controller*

		Bend elbow			Open elbow			Rotate CW			Rotate CCW			Grasp	
		F	N	S	F	N	S	F	N	S	F	N	S	F	S
BR	U	X	X	X	—	—	—	DX	—	—	—	—	DX	—	—
	D	—	—	—	X	X	X	—	—	DX	DX	—	—	—	—
BL	U	DX	—	—	—	—	DX	X	X	X	—	—	—	—	—
	D	—	—	DX	DX	—	—	—	—	—	X	X	X	—	—
LR	D	—	—	—	—	—	—	—	—	—	—	—	—	X	—
LL	D	—	—	—	—	—	—	—	—	—	—	—	—	—	X

Key:

BR: big right toe
BL: big left toe
LR: little right toe
LL: little left toe
U: (press) up
D: (press) down
N: normal speed
F: increase speed (or torque, force)
S: decrease speed (or torque, force)
X: press (close switch)
DX: press after delay (such that X precedes DX)
CW: clockwise
CCW: counterclockwise

The control logic of Table 1 is inhibited when a walk switch is closed. The F and N modes provide continuous increase or decrease of speed or force up to a pre-set maximum, the amount of the increase (or decrease) being proportional to the duration of pressure on the respective switches. An integrated circuit is thus utilized for the above continuous control. Furthermore, the distance to be moved or the angle to be rotated is also determined by analog integration such that it is proportional to the duration of the pressing of the respective

switches. Consequently, arm movements can be continuously varied by the operator at will to any required amount, utilizing visual feedback and the operator's sense of timing (to stop integration). The latter continuous distance and speed control thus tends to make the prosthesis perform less robot-like and facilitates more natural and smooth "homing" of the various degrees of freedom, to overcome one of the shortcomings that Alderson (4) mentions regarding his toe-controlled design, where only discrete movements are considered and where no direct speed control is possible.

The continuous position and speed control mentioned above is facilitated through the incorporation of one further analog control circuit in the design, namely, an analog position controller. The position and speed control signals above are applied to appropriate d.c. motors or stepper motors that generate the movement. The motor shaft thus follows a basically ramp-reference-input, such that a virtual reference-following-position control is accomplished.

2.2 Reference-Following Position Control

The position control system that is incorporated in the present design is basically a linear position controller. Although the prosthesis system is clearly nonlinear, the linear position controller is adequate not only because of its simplicity (which is in itself an important consideration), but also and mainly because the positional errors due to nonlinearity can be easily compensated for by the amputee. When the amputee thus observes an error, he will continue moving the prosthesis until the error is eliminated. Furthermore, in most cases some slight body or shoulder movement, as suggested by Alderson (4), is sufficient to overcome errors due to nonlinearities. The position controller, however, is a key to the present design, as indicated by Figure 1, where

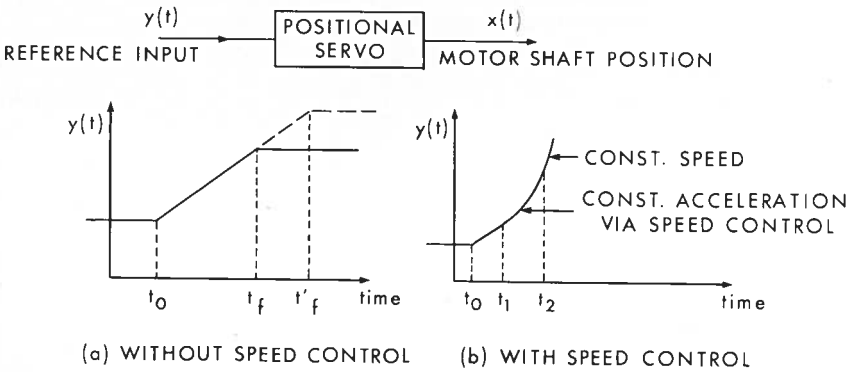

FIGURE 1.—Positional-control reference signals.

the shaft position x(t) is to follow the input reference (basically ramp) function y(t). The changing of the slope of y(t) thus provides speed control, whereas the duration $T = t_f - t_o$ of the application of the ramp input determines the amount of movement to be executed by the arm, noting that the shaft position determines the position of the arm, at the respective degree of freedom. The detailed analysis of the position controller is given in Section 4.

A further analysis of the performance of the prosthesis with various commands will be given in Section 5. We only mention presently that, as indicated by Table 1, a single toe action is sufficient to produce a movement without speed control and only two with speed control. We also note that the control logic is designed such that when the respective toes return to the wide range of "neutral" position (namely, stop pressing the switch and return to anywhere between the switches) movement is locked.

The control logic described in Section 3 is further designed to eliminate certain unintentional arm movements (due to unintentional interactions between toes), through giving priorities to various switches to inhibit the undesired interactions as indicated in Section 5.

3. THE CONTROL LOGIC DESIGN

The control logic employed in the present design utilizes only one type of gates, namely NOR gates, to standardize the design. The whole logic circuitry is such that it can be realized in a single logic IC (integrated circuit) chip when an appropriate mask is prepared. Hence, not only will the design be most compact, lightweight, and reliable, but also its cost will be negligible since once a mask is made, any number of chips can be manufactured for a negligible cost.

The detailed control logic design is presented in Figures 2–5, to facilitate its manufacture.

Defining:

BRU $\triangleq$ big right toe up
BRD $\triangleq$ big right toe down
BLU $\triangleq$ big left toe up
BLD $\triangleq$ big left toe down
RF $\triangleq$ right toe activates first
LF $\triangleq$ left toe activates first
FOR $\triangleq$ forward (motor runs clockwise)
REV $\triangleq$ reverse (motor runs counterclockwise)
inhib $\triangleq$ inhibit (prevent operation)
LR $\triangleq$ little right toe
LL $\triangleq$ little left toe
COM $\triangleq$ command (either toe activated)
FAS $\triangleq$ faster or more torque or force
SLO $\triangleq$ slower or less torque or force

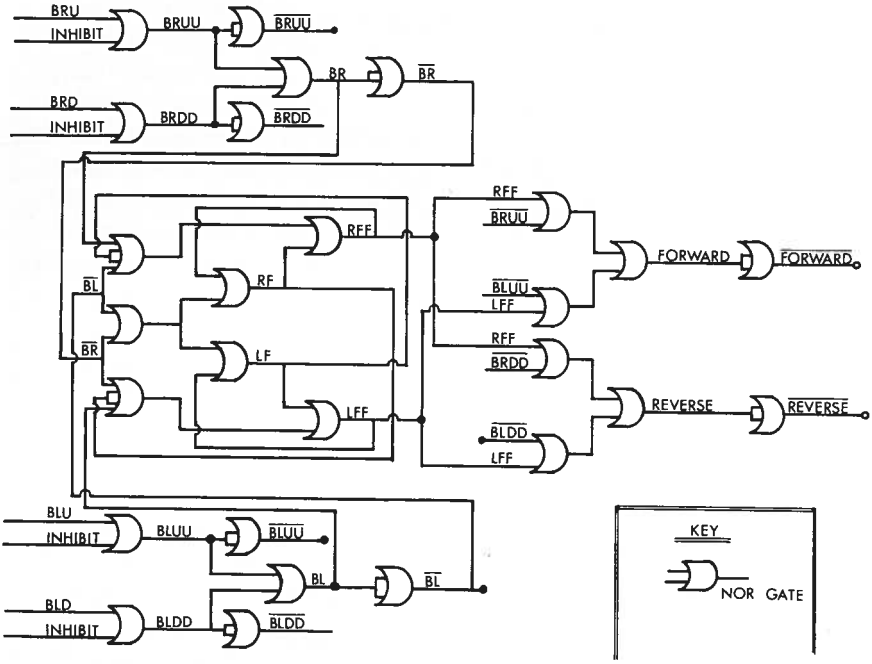

FIGURE 2.—Control logic.

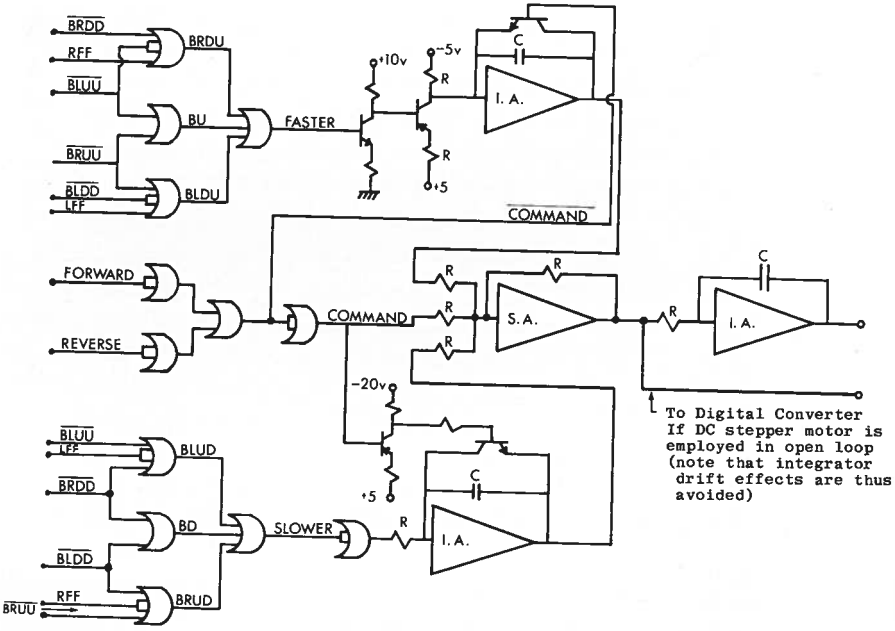

FIGURE 3.—Control logic (Cont'd).

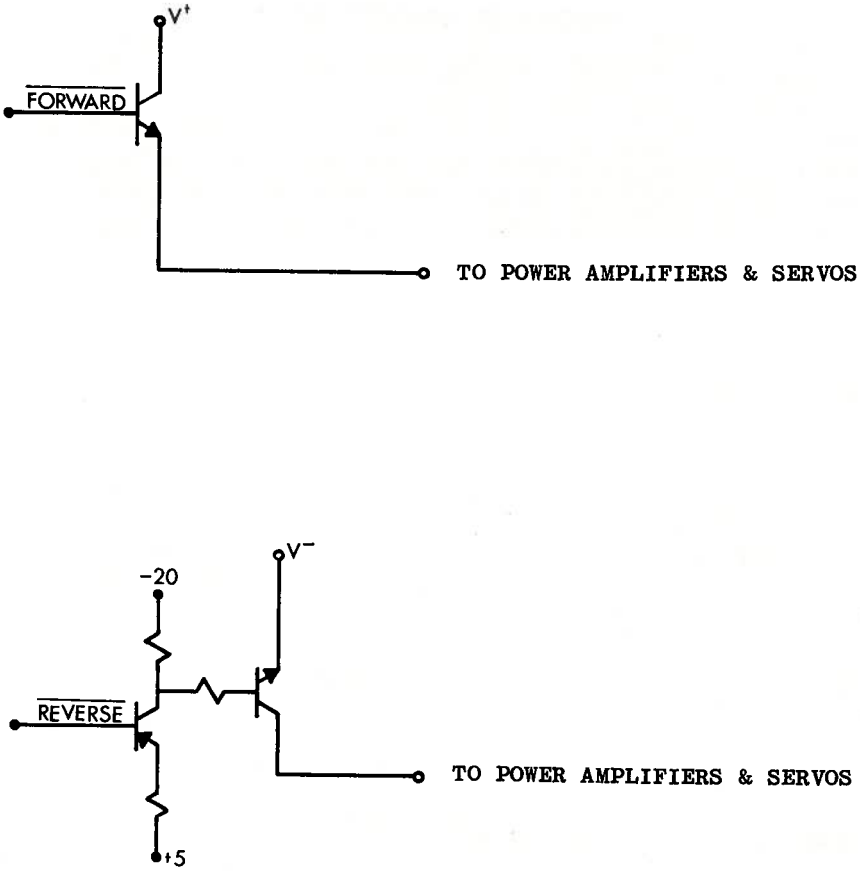

FIGURE 4.—Control logic (Cont'd).

The design of Figures 2–5 obeys the set of Boolean equations, as follows ($\vee$ denoting "or," $\wedge$ denoting "and," $\overline{}$ denoting "not"):

Equation no.

$$\mathrm{BRU} \vee \mathrm{inhib} = \mathrm{BRUU} \quad \text{(3.1-a)}$$
$$\mathrm{BRD} \vee \mathrm{inhib} = \mathrm{BRDD} \quad \text{(3.1-b)}$$
$$\mathrm{BLU} \vee \mathrm{inhib} = \mathrm{BLUU} \quad \text{(3.2-a)}$$
$$\mathrm{BLD} \vee \mathrm{inhib} = \mathrm{BLDD} \quad \text{(3.2-b)}$$
$$\overline{\mathrm{BRUU}} \wedge \overline{\mathrm{BRDD}} = \mathrm{BR} \quad \text{(3.3-a)}$$
$$\overline{\mathrm{BLUU}} \wedge \overline{\mathrm{BLDD}} = \mathrm{BL} \quad \text{(3.3-b)}$$
$$\mathrm{RFF} = \overline{\mathrm{RF}} \wedge (\mathrm{BR} \vee \mathrm{LF} \vee \overline{\mathrm{BL}}) \quad \text{(3.4-a)}$$
$$\mathrm{LFF} = \overline{\mathrm{LF}} \wedge (\mathrm{BL} \vee \mathrm{RF} \vee \overline{\mathrm{BR}}) \quad \text{(3.4-b)}$$
$$\mathrm{RF} = \overline{\mathrm{RFF}} \wedge (\overline{\mathrm{BL}} \vee \overline{\mathrm{BR}}) \quad \text{(3.5-a)}$$
$$\mathrm{LF} = \overline{\mathrm{LFF}} \wedge (\overline{\mathrm{BL}} \wedge \overline{\mathrm{BR}}) \quad \text{(3.5-b)}$$
$$\mathrm{FOR} = (\mathrm{RFF} \vee \overline{\mathrm{BRUU}}) \wedge (\mathrm{LFF} \vee \overline{\mathrm{BLUU}}) \quad \text{(3.6-a)}$$
$$\mathrm{REV} = (\mathrm{RFF} \vee \overline{\mathrm{BRDD}}) \wedge (\mathrm{LFF} \vee \overline{\mathrm{BLDD}}) \quad \text{(3.6-b)}$$

Equation no.

$$BRDD \wedge \overline{RFF} \wedge BLUU = BRDU \quad \ldots\ldots (3.7\text{-a})$$
$$BLDD \wedge \overline{LFF} \wedge BRUU = BLDU \quad \ldots\ldots (3.7\text{-b})$$
$$BLDD \wedge \overline{RFF} \wedge BRUU = BRUD \quad \ldots\ldots (3.8\text{-a})$$
$$BLUU \wedge \overline{LFF} \wedge BRDD = BLUD \quad \ldots\ldots (3.8\text{-b})$$
$$BLUU \wedge BRUU = BU \quad \ldots\ldots (3.9\text{-a})$$
$$BRDD \wedge BLDD = BD \quad \ldots\ldots (3.9\text{-b})$$
$$\overline{FOR} \wedge \overline{REV} = COM \quad \ldots\ldots (3.10)$$
$$\overline{BRDU} \wedge \overline{BU} \wedge \overline{BLDU} = FAS \quad \ldots\ldots (3.11\text{-a})$$
$$\overline{BLUD} \wedge \overline{BD} \wedge \overline{BRUD} = SLO \quad \ldots\ldots (3.11\text{-b})$$
$$\overline{LR} \wedge \overline{WALK} = LRR \quad \ldots\ldots (3.12\text{-a})$$
$$\overline{LL} \wedge \overline{WALK} = LLR \quad \ldots\ldots (3.12\text{-b})$$
$$WALK \vee LRR \vee LLR = inhib \quad \ldots\ldots (3.13)$$

to satisfy the control requirements of Table 1 and of the outline of the present Section and of Section 5.

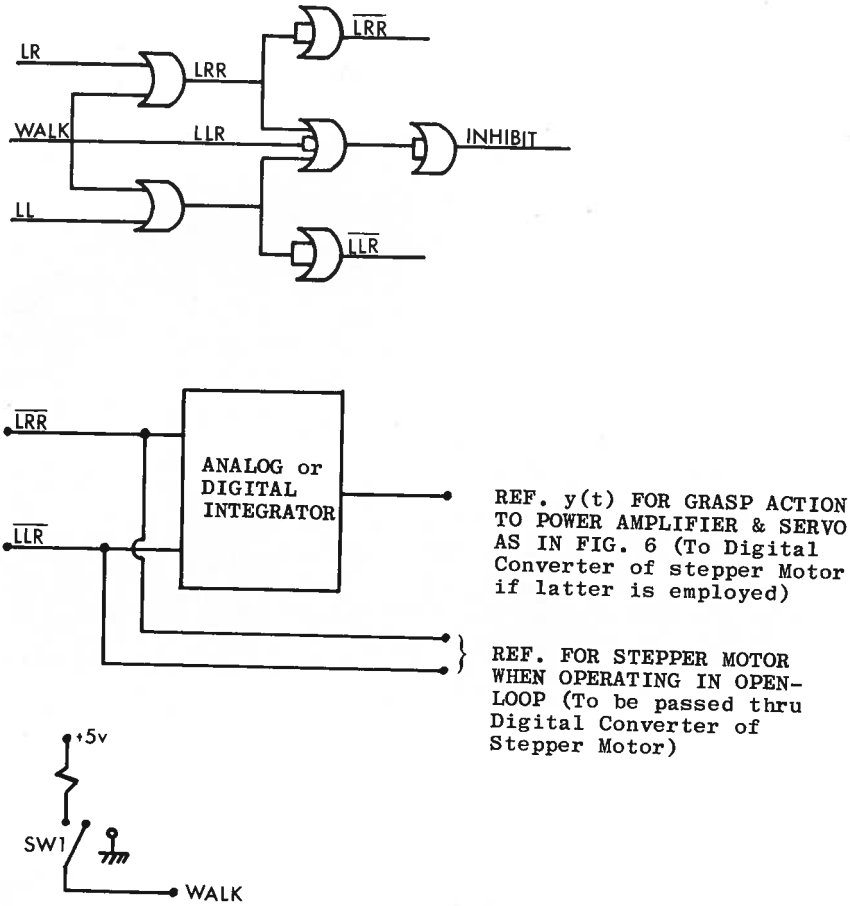

FIGURE 5.—Control logic (Cont'd).

4. THE POSITION CONTROLLER

To simplify position and speed control a reference-following feedback position controller has been selected for the present design. The position controller facilitates that a certain position be achieved almost instantaneously (noting the short time-constant of a d.c. motor, of the order of tens of milliseconds). Consequently, if the position reference is changed at a constant rate of 0.1 in./sec., the position itself will follow the reference (Fig. 1) at the same rate, as is indicated by the analysis below (Fig. 6).

Consider a simplified position control system utilizing field-excited d.c. motors as in Figure 6.

The system may be described by the following set of linear equations (for justification of linear model see Section 2):

(a) for summing junction:

$$e(t)=y(t)-z(t)\ ;\ y(t)=\text{reference signal}=K_r\,t;\ t=\text{time} \tag{4.1}$$

$K_r=K_{ro}+K_{rt}t'$; K_{ro}, K_{rt}=constants, $t'=t-t_1$; $t_1<t\leq t_1$; t_2; =duration of exercising speed control (Fig. 1a,b)

(b) for power amplifier:

$$i(t)=K_a\,e(t)\ ;\ K_a=\text{gain constant} \tag{4.2}$$

(c) for motor:

$$K_T i=T\ ;\ K_T=\text{torque coefficient}\ ;\ T=\text{input torque} \tag{4.3}$$

$$T=J\frac{d^2x(t)}{dt^2}+F\frac{dx(t)}{dt}+T_L(t)\ ; \tag{4.4}$$

J= inertia of motor and shaft
F= friction coefficient
T_L= load torque

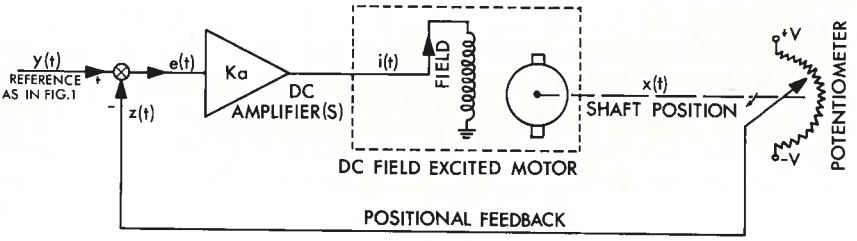

FIGURE 6.—Position feedback control system.

NOTE: Fundamentally, performance is unchanged (though Eqn. 4.2 is not applicable) when a d.c. motor is substituted with a d.c. stepper motor, with its standard digital conversion and reversing logic, the latter motor having better torque-to-volume ratio and locking torque characteristics. Open-loop stepper motor positioning may, however, be simpler and yet appropriate. (See Fig. 2–5.)

(d) for positional feedback:

$$K_p x(t) = z(t); \; K_p = \text{feedback coefficient} \tag{4.5}$$

Equations (4.1) to (4.5) yield, after employing a Laplace transformation:

$$K_T K_a [y(s) - K_p x(s)] = Js^2 x(s) + Fsx(s) + T_L(s) \tag{4.6}$$

s being the Laplace transform variable. Consequently, the following transfer function between a perturbation $\triangle y$ in the reference input y(s) and a perturbation $\triangle x$ in the shaft position x(s) is obtained, for a constant load T_L:

$$\frac{\triangle x(s)}{\triangle y(s)} = G(s) = \frac{K_T K_a}{Js^2 + Fs + K_T K_a K_p} \tag{4.7}$$

We observe that equation (4.7) yields the natural frequency and the damping of the position control system to determine its dynamic characteristics and the means for their adjustment (through varying K_p, K_a when J, F are fixed).

When sufficient damping is exercised by an appropriate selection of K_p, K_a (say, a damping factor of z=0.7 to 0.9 where $z = \frac{F}{2\sqrt{J K_T K_a K_p}}$), the steady-state step-response of the position control system is given by $\frac{K_s}{K_p}$, K_s being the transmission constant between the shaft and the appropriate arm movement, such that x(t) follows y(t) as required, for a rate $\frac{dy}{dt}$ that is low, compared with the natural frequency $\sqrt{\frac{J}{K_a K_p K_T}}$ of the position control system.

Alternatively to the d.c. servo, *d.c. stepper motors* may be employed. These have excellent locking features but require digital conversion of the analog signal, as is easily accomplished with IC hardware (Fig. 2–5). Furthermore, permanent-magnet d.c. stepper motors have superior volume-to-torque and weight-to-torque ratios to most other motors. If these are employed in closed loop, analysis above in this Section is basically valid, assuming that the digital conversion required is fast and hardly affects the dynamics, though equation (4.2) no longer holds. The employment of d.c. stepper motors in open loop is also possible in the present design, and has the advantage of hardware savings as indicated in Figures 2–6 and in the elimination of analog integrator drift effects, since I.A.-3 and I.A.-4 of Figures 2–5 are not required. (Note that this drift may also be overcome via digital integration in closed-loop operation.)

5. ANALYSIS OF PERFORMANCE

Table 1 indicates that for obtaining movement in any degree of freedom only a single toe movement is required, and when speed control is also applied two toes are needed, one being actuated slightly after the other. The delay between the two movements only determines when the speed is to start to deviate from the normal. However, for speed control to be exercised, overlap between the two toe movements must exist. Speed control may increase speed to a pre-set maximum or reduce it to zero. It may further reverse direction, to simplify the exercising of position and the speed control by the amputee. However, as soon as another major command (X of Table 1) is applied, all speed controllers return to zero, such that any subsequent speed control starts from normal speed (N of Table 1), by means of discharging the feedback capacitors of the appropriate integrating amplifiers. Normal speed is set at a pre-selected most-likely value.

When resistance to an arm movement is increased, a longer duration of the respective actuation will be required.

Grasp control is not related to any normal N-mode in Table 1. Consequently, for a fine adjustment of grasp, the amputee must "play" with both small toes. Simultaneous operation of both little toes is certainly possible, and one may cancel the effect of the other, thus facilitating very fine control.

At modes LR, LL of Table 1, an undesired interaction with the big toes is most likely to occur. Consequently, the logic circuitry gives preference to the LR, LL modes, such that while these are exercised any BR, BL switching is ignored.

Another difficulty in the control may arise at a mode where speed control is exercised. Here, when X stops whereas DX still continues, the logic ignores both, to avoid a sudden undesired jump. However, the opposite is not true, since it is obviously not necessary.

The design thus eliminates some most likely sources for errors in toe operation, to relieve the operator from too much concentration on his toe movements. Consequently, and due to the simple structure of Table 1 where basically one toe movement is required, it is hoped not only to simplify training the amputee in using the prosthesis, but also to reduce the need for his continuous concentration on his toes, and make it (after a training period) nearly automatic.

Once the motor has been driven to a certain desired position, amplifier drift may tend to unintentionally change that position reference. Consequently, digital or very low-drift analog integrators are to be employed to hold the positional reference until a new command is applied.

6. CONCLUSIONS

The present design has incorporated microelectronic logic design in a feedback or (with stepper motors) an open-loop position-control system to achieve toe control of an upper-limb prosthesis in three degrees of freedom. The resulting control system has been shown to facilitate continuous and sensitive speed, position and force control in the three degrees of freedom considered, or in any other three degrees of freedom. The logic circuitry has further facilitated some of the most likely operational errors to be eliminated in order to reduce the required concentration of the amputee on proper actuation of the toes. All these, together with the reduction of the number of simultaneous toe signals to only one simple toe movement per degree of freedom (or to two when speed control is also employed), were not possible with the state of the art in the early 1950's when toe control was first suggested by Alderson (4), where constant attention and mental calculations were required from the amputee and where no speed control or continuous motion was possible. It is therefore hoped that the present work may lead to a new evaluation of toe-control concepts when a multi-degree of freedom control is required, noting the filtering difficulties arising in EMG multi-degree of freedom control, and noting that a smooth and continuously controllable arm may be facilitated via toe control without requiring excessive attention from the amputee.

It is emphasized that the present design, though implemented in an electric arm, could be equally well-realized with pneumatic final elements, thus leading to a hybrid arm with electronic control and pneumatic final elements. This should prove important when more than three degrees of freedom are considered, where electrical final elements (motors) will be too heavy. We also indicate that the present logic design may be realized in a single IC (integrated circuit) chip, reducing size and weight to a minimum and yielding maximum reliability.

The extension of the logic to four degrees of freedom is a natural next step in the design, as is the study of interfacing the present logic with pneumatic final elements (valves) in a hybrid arm. Studies of interfacing the present design in different kinds of electrical drives is also of importance to demonstrate the wide range of applicability of the present design (to different degrees of freedom that arise in different amputee requirements).

Finally, in cases of multi-degree-of-freedom prostheses, an incorporation of toe control with EMG control should be studied. Here, problems of filtering noise pickup and interactions of the various EMG signals would deserve major attention, and the recent progress in filtering theory should be applied to this study (5, 6).

ACKNOWLEDGMENT

The help of Mr. W. B. Cline in the execution and testing of the logic design is gratefully acknowledged.

REFERENCES

1. Wilson, A. B. and E. F. Murphy: Engineering Approaches to Limbs. Prosthetics and Orthotics. CRC Critical Rev. in Bioeng., 1:169–215, Dec. 1971.
2. Mason, C. P.: Practical Problems in Myoelectric Control of Prostheses. Bull. Prosthetics Res., BPR 10–13:39–45, Spring 1970.
3. Hartman, H. H., D. C. Hobart, W. Waring, and V. L. Nickel: A Myoelectrically Controlled Powered Elbow. Artif. Limbs, 13(2):61–63, Autumn 1969.
4. Alderson, S. W.: The Electric Arm, pp. 359–410 *in* Human Limbs and Their Substitutes, Edited by P. E. Klopsteg and P. D. Wilson, et al., McGraw Hill, New York, 1954. (Reprinted, Hafner Publishing Co., New York, 1968.)
5. Sage, A. P. and J. L. Melsa: Estimation Theory. McGraw Hill, New York, 1971.
6. Graupe, D.: Identification of Systems. Van Nostrand Reinhold, New York, 1972.