A METHOD OF RECORDING PRESSURE DISTRIBUTION UNDER THE SOLE OF THE FOOT

Paul Lereim, M.D.
Department of Neurosurgery, Rikshospitalet
Oslo 1, Norway

Fin Serck-Hanssen
Central Institute of Industrial Research
Oslo, Norway

INTRODUCTION

After different orthopedic operations of the lower limbs, or after fractures, the patients have to walk with gradually increasing partial weight-bearing. In the diagnosis of some orthopedic diseases, it may also be useful to have information about the pattern of weight-bearing. For this purpose previous methods have been described by Bauman and Brand (1963) (1), Holden and Muncey (1953) (2), Pliquett and Helm (1967) (3), Schwartz et al. (1947) (4), and Schales et al. (1967) (5). Hirsch and Lewenhaupt (1969) (6) used a normal, commercially available balance in instructing the patients at the time of ambulation. New electronic principles permit a simplification of the apparatus required, and have made the measurements more accurate. A method for clinical use must satisfy certain requirements:

1. The apparatus must be simple to use.
2. The measurement must be made during normal walking, the patient must use shoes, and there must be allowance for freedom of movement.
3. An exact linear measurement of the pressure must be possible.
4. The transducers must be fixed in position in relation to the desired weight-bearing areas.

MATERIALS AND METHODS

The method described here was developed at the Institute of Work Physiology in Oslo in cooperation with the Central Institute of

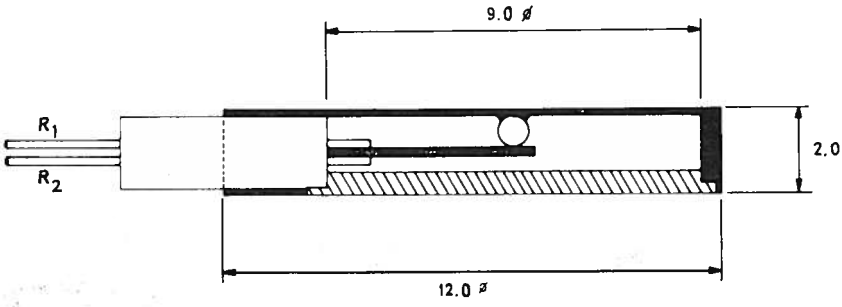

FIGURE 1.—The transducer in cross section. See text.

Industrial Research. The transducer used is a miniature type developed under the direction of siv. ing. Fin Serck-Hanssen (7) of the Central Institute of Industrial Research (1969). Figure 1 shows the principle of the transducer in cross section.

The membrane and the mounting ring for the position sensor are turned from a single piece of brass to insure a rigid construction and a minimum of distortion. The deflection of the membrane, due to the applied pressure, is transferred to the silicon beam of the position sensor. The position sensor consists of two main parts: the silicon beam with diffused resistors, one on each side; and the special header in which the beam is mounted. When the tip of the beam is being deflected, the resistors will change their values, and when these resistors are arranged to form parts of an electrical circuit, deviations in the current will be produced that are propor-

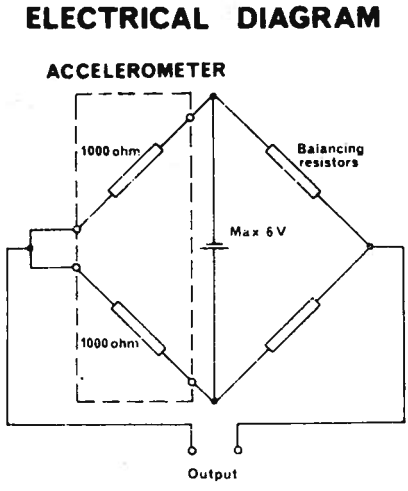

FIGURE 2.—Shown is the complete Wheatstone bridge normally used when applying the AE 861 accelerometers. Under the influence of acceleration, one of the beam resistors increases and the other decreases.

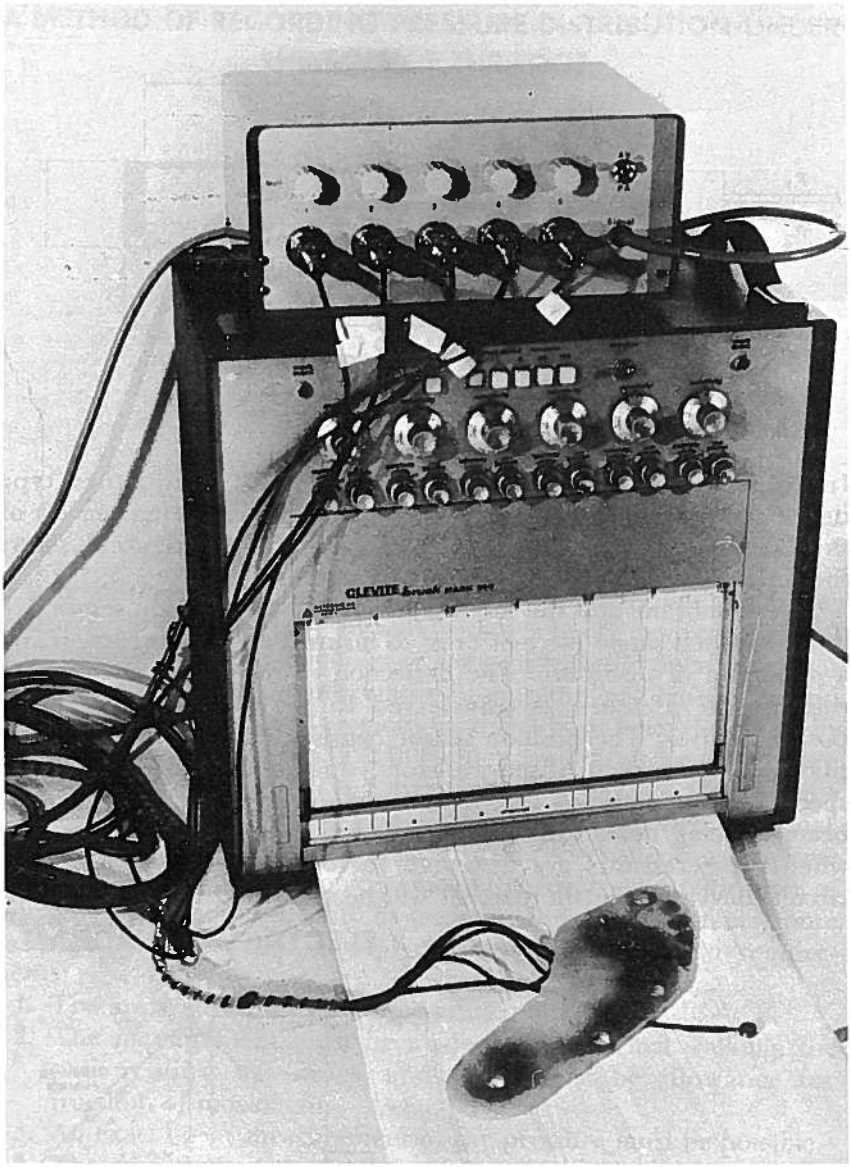

FIGURE 3.—The whole equipment. One transducer is taken out of the PVC sole.

tional to the original mechanical deflections. In Figure 2 a circuit diagram including transducer, battery, balancing circuit, and recorder is shown. In principle this works in the same way as a Wheatstone bridge.

The transducers can be calibrated hydrostatically in a pressure chamber or in a test-jig to which oil pressure is applied. For the present application a mechanical calibration before the registration must be carried out. In the actual application of a number of transducers, it is advantageous to use a common voltage source for all transducers with individual balancing and series resistors for each transducer. By means of the balancing circuit it is possible to set the zero point at any desired position, and by means of the series resistors the output of all transducers, according to the calibration data, can be made equal for the same applied pressure (mechanical calibration).

For recording all transducers simultaneously a high speed recorder Brush Mk 260 was used (see Fig. 3).

The pressure may be measured at any desired point under the sole of the foot, for instance, under the metatarsal heads or under the heel. The transducers must be secured in the desired position, and the sole of the foot must rest on an even surface. This problem is solved by placing the transducers in a sole made of polyvinylchloride (PVC). This material is very flexible and easy to cut. The sole material is made the same thickness as the transducers in order to provide the required even surface.

PROCEDURE

First, the test subject traces his foot-print upon the sole material, after which an X-ray of the weight-bearing forefoot is superimposed, so that the exact position of the metatarsal heads can be determined. At these points, holes are stamped out for the transducers. When the sole is fitted with the transducers, the sole is placed inside the shoe. A 20-ft.-long cable allows free walking on the floor. It is taken up the side of the leg from the shoe to the hip where it is fixed with a belt. The signals may also be transmitted by telemetry.

RESULTS

The first diagram (Fig. 4) shows a typical curve for a normal foot, by walking in a normal manner on the floor with the transducers placed under the metatarsal heads. The following information may be elicited:

1. The actual pressure in kg/cm^2.
2. The point under which the pressure is greatest.
3. When each point touches the ground, and the duration of the stance phase.

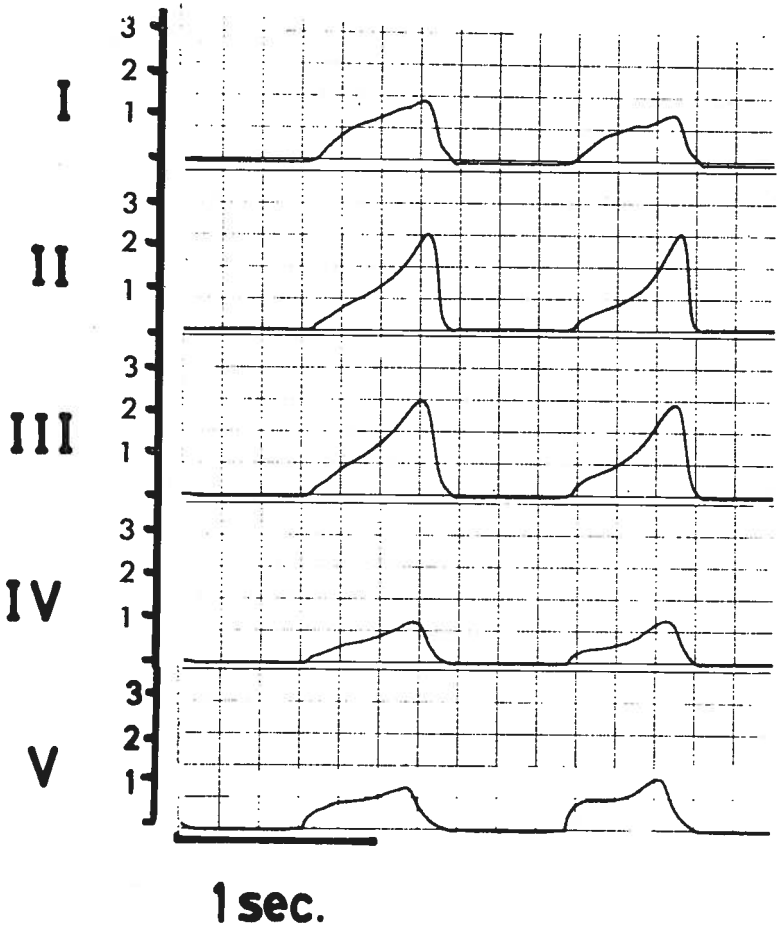

FIGURE 4.—The typical curve for a normal foot with the transducers placed under the metatarsal heads. The ordinate gives the pressure in kg/cm².

4. The pressure displacement with time from point to point.

By placing the transducers under the heel, base, and head of the fifth metatarsal bone, the head of the first metatarsal, and the great toe, the whole foot with pressure values and intervals in time can be studied (Fig. 5). The equipment has been used in Martina Hansens Hospital to study partial weight-bearing after orthopedic operations.

DISCUSSION

Earlier methods for recording the pressure distribution under the sole of the foot have been too complicated for routine use in

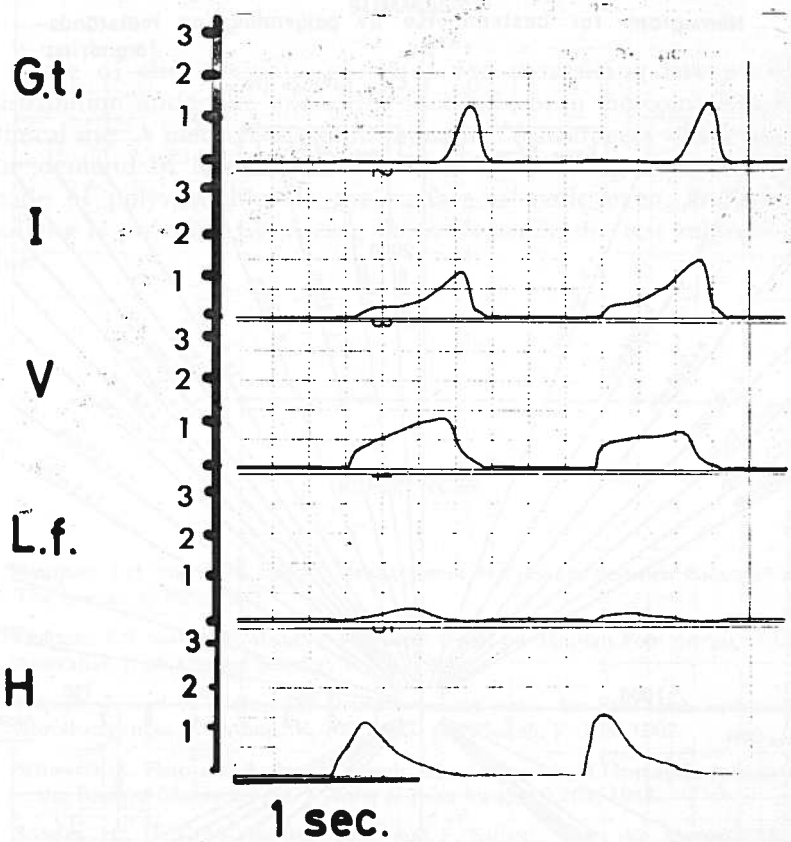

FIGURE 5.—The curve for a normal foot with the transducers placed under the heel (H), base (L.f.) and head (V) of the 5th metatarsal bone, and head of the first (1) and the great toe (G.t.).

orthopedic hospitals. Earlier transducers were not quite linear in their registration, and when they were fixed directly to the sole of the foot they disturbed normal walking. Walking barefoot on a pressure-registering platform can hardly be a normal walk.

The present transducers satisfy the demand for linearity, they are small, only 2.5 mm. high, and when they are built into a sole made of PVC, the surface on which the foot rests is quite even. A new sole is made for each test subject.

In addition to its application in orthopedic hospitals, this method may be useful in sports medicine, when it is desired to study the running style of athletes either on a treadmill, or by use of telemetric registrations on a sports field. (A nomogram is presented in Fig. 6.)

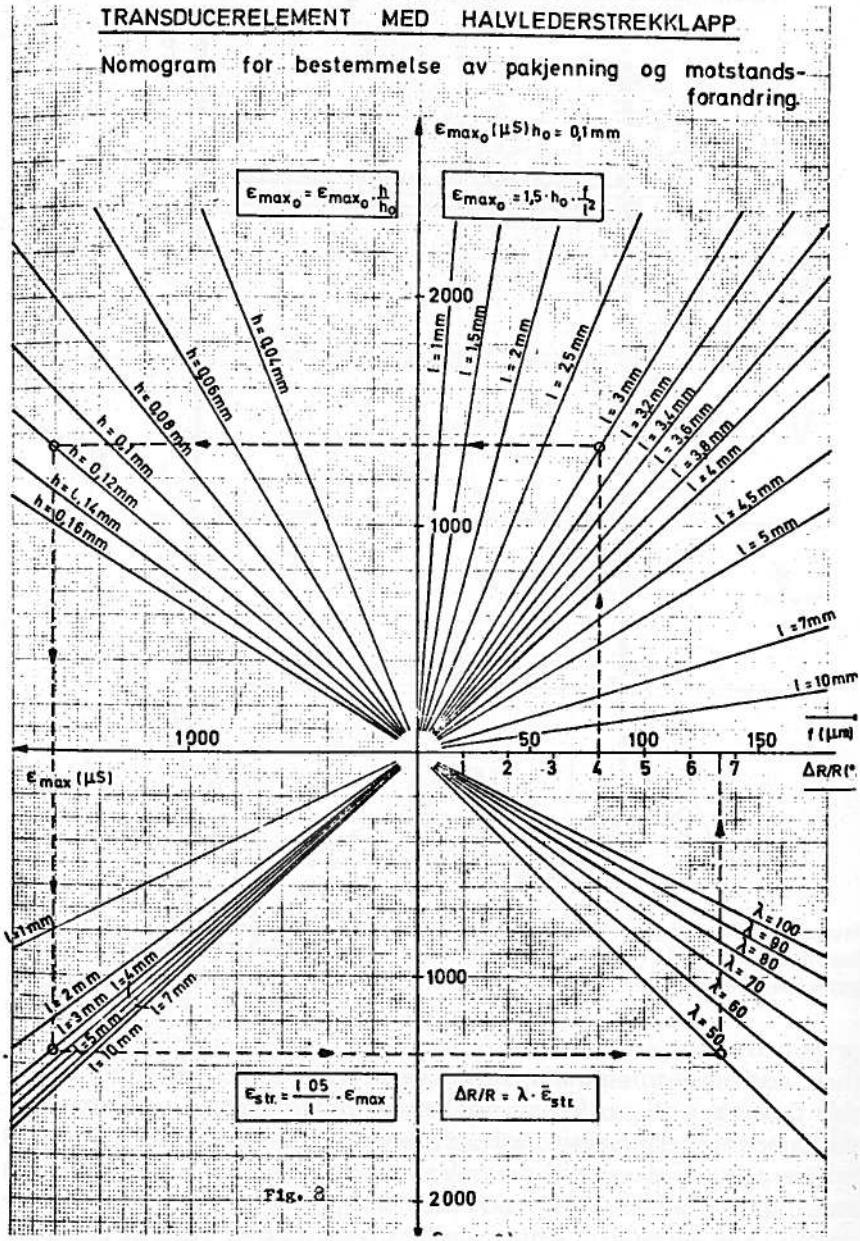

FIGURE 6.—Nomogram for evaluation of stress and change of resistence.

$\sum_{max}$ = Maximal relative lengthening of diffused resistor.

$\frac{\Delta R}{}$ = Relative change of resistance in diffused resistor.

λ = Gage factor of diffused resistor.

f = Deflection of silicon beam.

l = Length of silicon beam.

h = Thickness of silicon beam.

(From Serck Hanssen: Mekanisk elektrisk omformer. Virkemåte og anvendelse (7).)

SUMMARY

Some of the previous methods for measuring the pressure distribution under the sole of the foot have been too complicated for clinical use. A method based on miniature transducers which satisfies the demand of linearity is described. By building these into soles made of polyvinylchloride the surface is made even, and normal walking is provided by placing the soles inside the test subject's own shoe.

REFERENCES

1. Bauman, J.H. and P.W. Brand: Measurement of Pressure between Foot and Shoe. The Lancet, P. 629, 1963.
2. Holden, T.S. and R.W. Muncey: Pressures Upon the Human Foot during Walking. Australian J. of Applied Science, Vol. 4, 1953.
3. Pliquett, F. and W. Helm: Die Druckverteilung unter der Fuss-sohle während des Abrollvorganges. Z. orthop. V. 102, 1967, p. 285–295, V. 103, 1967.
4. Schwartz, R. Plato and Arthur L. Heath: The Definition of Human Locomotion on the Basis of Measurement. J. Bone & Joint Surg., 29:203, 1947.
5. Schales, H., H. Groh, W. Baumann, and F. Kubeth: Über die Abstosskräfte des Fussballens bei Gang und Lauf. Ergonomics, 10(6):683–694, 1967.
6. Hirsch, Carl and Elisabeth Lewenhaupt: Simple Control Devices in Early Ambulation Following Surgery of Lower Limbs. Acta orthop. Scand. 40:119–121, 1969.
7. Serck-Hanssen, Fin: Mekanisk elektrisk omformer. Virkemåte og anvendelse. SI-publ. 635. Sentralinstituttet for Industriell Forskning, 1969.
8. Pliquett, F. and W. Cerwenka: Zum Abrollvorgang des Fusses. Z. orthop. V. 102, 1967, p. 285–295, V. 103, 1967, p. 356–365.