TRANSFERRING LOAD TO FLESH

Part VIII. STASIS AND STRESS[a]

Leon Bennett, M.A.E.
Senior Research Scientist

New York University
Division of Applied Science
26-36 Stuyvesant Street
New York, N.Y. 10003

ABSTRACT

Those who suffer peripheral vascular disease (PVD) frequently require lower-limb amputation. To prevent further difficulties with circulation, the socket and support system of the resulting artificial leg should be arranged so as to prevent impairment of blood flow.

The mechanical stress factors tending to impede flow and cause stasis are investigated. An assessment is made of the relative importance of the two types of stress, normal and shear, in reducing the flow within a simulated vessel surrounded by a model flesh.

INTRODUCTION

The application of sufficient external pressure will curtail and even stop flow within the capillaries and arteries. Evidence indicates that external pressures of approximately 1.5 p.s.i. result in collapse of the capillaries and veins; larger values restrict arterial flow (1). Noting that the magnitude of stump pressures produced by gait on a prosthetic leg exceeds 1.0 p.s.i. in stance phase (2), circulation difficulties may be anticipated for some amputees. In particular, those patients suffering peripheral vascular disease may exhibit capillary pressures considerably reduced from the normal 0.5 p.s.i. (1), and therefore would be unable to develop sufficient counterpressure to permit flow. In extreme cases of peripheral vascular disease, a pressure deficit analagous to that produced by excessive prosthetic socket suction may develop. In this condition, the "counteraction, which presses out the fluids and the blood is missing and painful congestion of the stump is seen. This often leads to reamputation" (3).

[a] Based on work performed under VA Contract V101 (134) P-131.

To aid the PVD amputee, it would be highly desirable to prepare prosthetic sockets and suspension mechanisms which create the least possible internal flow interference and which provide good biomechanical function. As a first step in the design of such a system, it is useful to consider the means of flow restriction itself. While the literature develops the importance of direct or normal pressure as a prime cause of vascular restriction, little is said about the manner in which the pressure is translated into restriction of flow. For example, while pressure obviously gives rise to compressive stress within the flesh, considerable shear stress may also result. For the designer to minimize flow impedance within the socket, it is useful to know the relative significance of these factors. Different approaches to socket design may well be pursued depending on the importance placed on either shear or compressive stress in flow restriction.

In this work we are concerned with the relative weight of shear and compressive stress in impeding flow. Subsequent work will consider means of averting vascular restriction from such stresses.

METHOD OF PROCEDURE

This work is entirely experimental. A simulated slab of hard flesh was cast around a wire of $^1/_{32}$-in. diameter. Withdrawal of the wire left a flesh model containing a flow vessel. Varying modes of stress were applied to the vessel, causing a change in the vessel's cross-sectional area. The change in each case was monitored by noting the flow of water passing through the vessel per unit time. Applied stress values were obtained by calculation from theoretical considerations.

The model flesh was cast from a polymer product offering roughly twice the stiffness of Spence Gel. As Spence Gel is believed to be a fair match to the stiffness of flesh, the model flesh employed herein is approximately twice as stiff as typical soft tissue. Because of the known wide variability of tissue characteristics, the large stiffness value is not disturbing. However, caution should be used in applying the results in a quantitative fashion. (As long as qualitative results are considered, we may avoid the issue of precise local stiffness.)

Measured stiffness characteristics of the vessel model (see Fig. 1) are given in conventional tensile test terms, where the tensile stresses associated with given amounts of unit elongation are shown. Included for comparative purposes are similar tests conducted on Spence Gel. The slope of these curves corresponds to Young's modulus of elasticity.

The means of testing is shown in Figure 2. A reservoir of water at some known specific potential energy or "head" was connected through a pipe to the simulated vessel in the flesh model, the vessel having a $^1/_{32}$-in. diameter and a 3-in. length. The model flesh with the simulated vessel

was loaded as described below. Measurements of flow were made by collecting water over timed intervals. To simulate various vessel internal pressures the water's potential energy or "head" was altered.

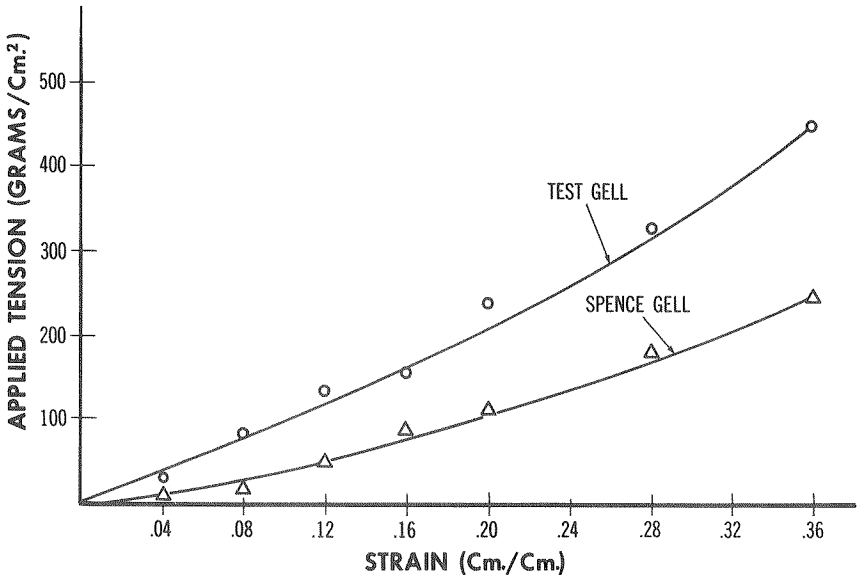

FIGURE 1.—Gel stress-strain characteristics. Note that the test gel is about twice as stiff as Spence Gel.

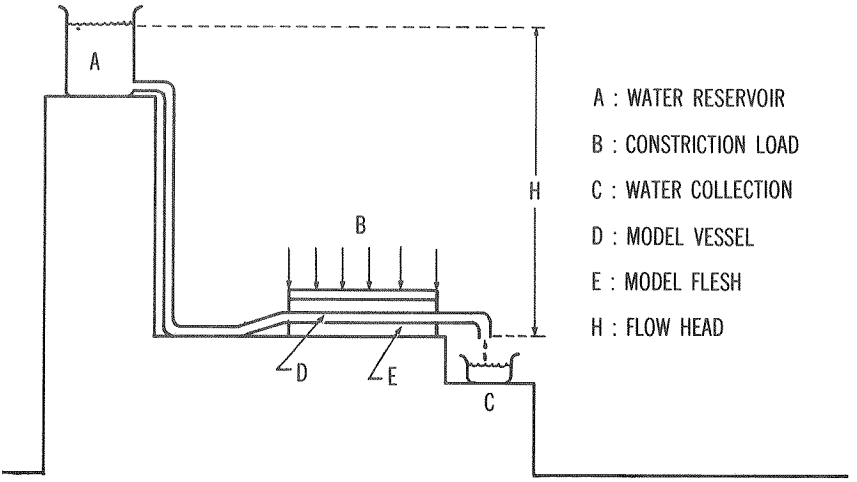

FIGURE 2.—Test arrangement schematic.

Three different loading schemes were employed to stress the vessel (Fig. 3, top). In the first, the compression test, a load is placed on the horizontal top face of the model flesh. As the load is increased the flow duct is constricted and ultimately pressed flat.

The pinch shear test arrangement (Fig. 3, middle) is similar to that of a pinch clamp, as used in chemistry lab work. Load is applied to one face of

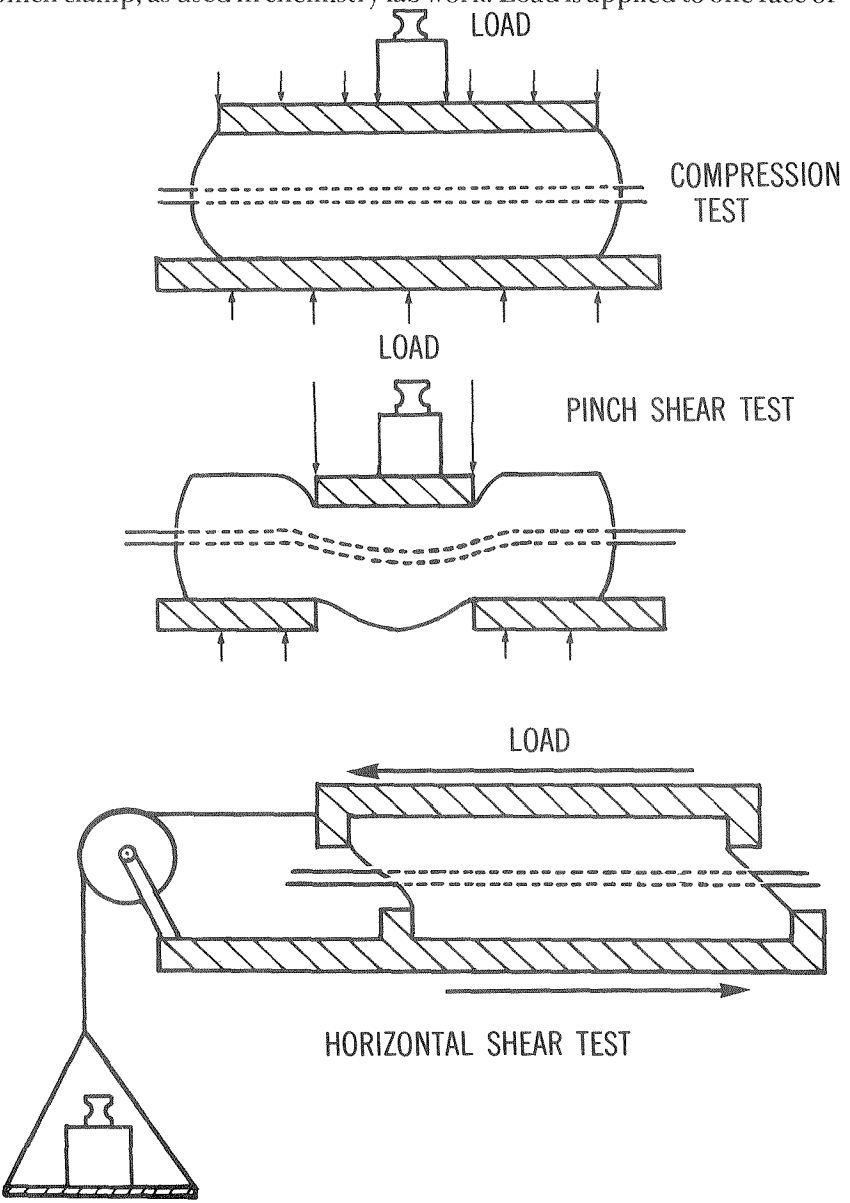

FIGURE 3.—Loading schemes employed in stressing the model vessel.

the model flesh slab. The supporting face is arranged so that load cannot be transmitted directly, thereby avoiding direct compression. Instead, vertical shear is the basic means of absorbing load.

Horizontal shear (Fig. 3, bottom) was produced by placing the model flesh slab in end caps that permitted horizontal loading through a pulley system. The vessel was tested both in line with the applied load (Fig. 3, bottom) and with the vessel at 90 deg. to the applied load, a condition we shall call cross shear.

The stress values corresponding to a given load were determined by combination of methods. Compressive stress was determined by the analytical procedure given earlier in this series (4). Pinch shear stress was determined in a relatively simple fashion—by assuming that the two resisting vertical faces each experience a uniform shear load of a magnitude equal to one-half the applied external load. While the shear stress actually varies over the model flesh, the average stress value experienced will correspond closely to the value at the vessel location because of the central location of the vessel. For this reason the above approximation is believed to be fairly accurate.

The values of horizontal and cross shear stress were determined directly from fundamental concepts; the stress is set equal to the load divided by the area in shear.

The correspondence between these types of simulated loading and above-knee stump reality is given by the following examples:

a. Compressive stress—wherever the socket presses on the stump.
b. Shear stress—wherever the compressive stress changes drastically, particularly at the brim and beyond the brim.
c. Pinch shear stress—wherever a vessel undergoes a sharp change in local constraint, such as passage over a muscle sheath.

RESULTS

The flow impedance resulting from applied compressive stress is given in Figure 4. Application of external pressure produces a nonlinear response; as the stress becomes large, flow becomes increasingly sensitive to stress until a point roughly halfway to stasis is reached. Thereafter, flow rate becomes successively less responsive to increases of stress, finally achieving an asymptotic relationship with stress.

Over the range of "head" or internal pressure values tested, we would anticipate a linear response of flow rate to "head" values when stress is small. Indeed, as the external stress goes to zero, the flow is of the Poiseuille type, in which the flow rate is directly proportional to the "head." Thus the flow rate values given on the ordinate (where external stress is zero) should be proportional to the given "head" values. Inspection shows a rough correspondence. As the compressive stress increases,

internal pressure values become increasingly significant in determining flow rate values, so that the flow near stasis is primarily a reflection of the potential energy or "head."

Pinch shear is seen (Fig. 5) to exert a more powerful constricting effect that compressive stress, stopping flow at about one-third the comparable compressive stress value. The operating "head," while significant, is not crucial to flow when approaching stasis.

Horizontal shear characteristics (Fig. 6) appear similar to those of compressive stress. Data-taking was suspended at approximately 600 g./cm.^{2} due to instability in tethering the flesh model. Cross shear tests of any type proved impractical for the same reason—instability of the test block within the experimental setup.

Comparing Figures 4, 5, and 6 shows significant flow differences at zero applied stress levels. This should not occur and reflects experimental error, specifically dirt accumulation in the rather fine vessel. While this defect is real, it would not appear to influence the broad trends obtained from the data.

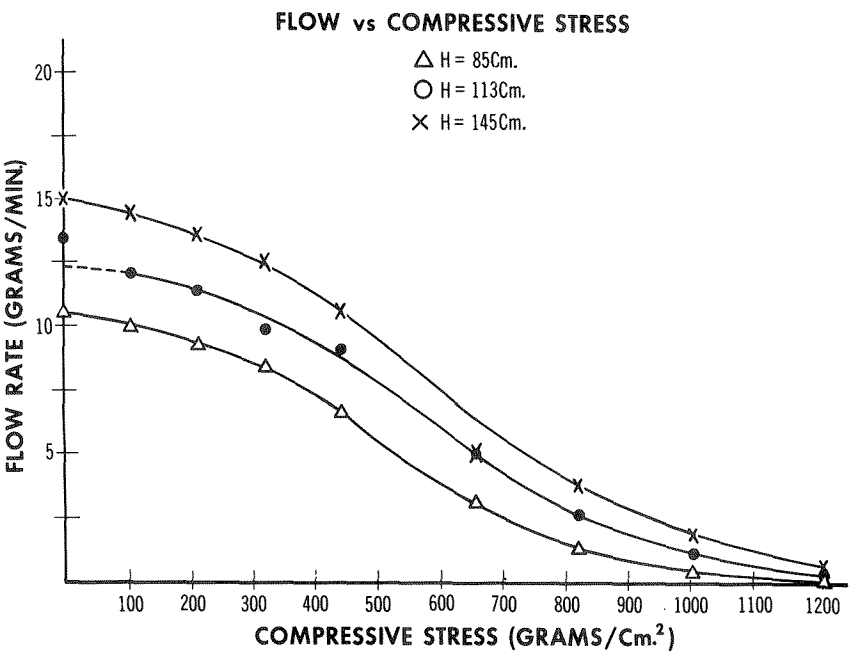

FIGURE 4.—Vessel flow as a function of compressive stress.

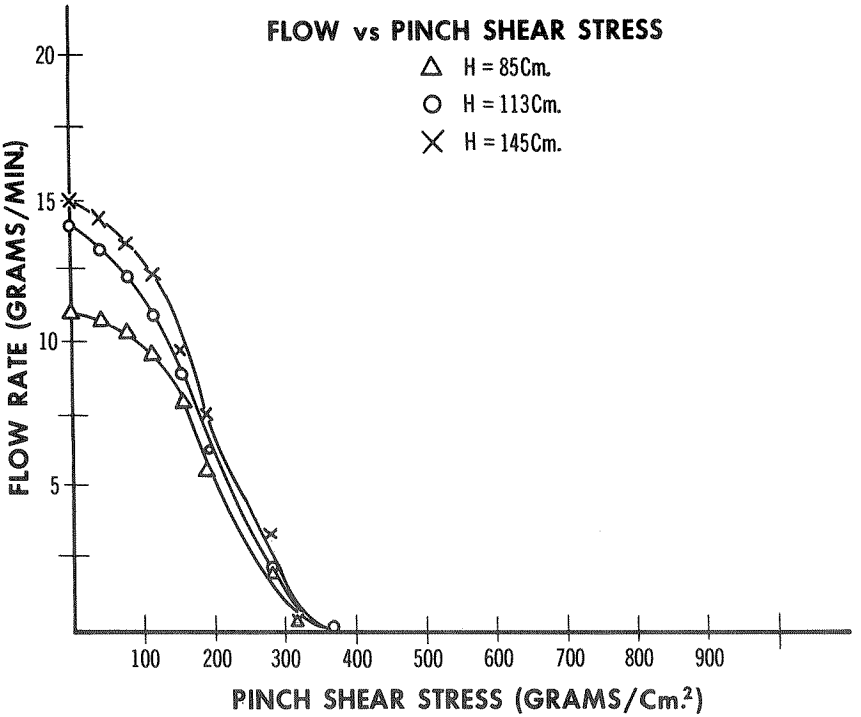

FIGURE 5.—Vessel flow as a function of pinch shear stress.

DISCUSSION

All tested external stresses acted to impede flow, none to promote flow. The initial cross section was that of a circle, a surface whose perimeter is as far removed from the axis as possible for a given cross-sectional area. For flow in a vessel of circular cross section, the fluid shear stress is a minimum as compared to that corresponding to any other cross section. Therefore, distorting the circular cross section in any way, even if the same cross-sectional area is maintained, will increase the fluid shear stress and thereby lessen flow for a given fluid pressure. Indeed the only form of cross section distortion conceivably leading to an increase of flow would be one producing a more perfect circle or one producing a larger cross-sectional area. Such strains, which did not arise in this work, would be the natural outcome of application of a large "head" or value of internal pressure.

The forms of stress that were applied in this work are those to be expected within the above-knee stump near the socket or femur. Prior papers in this series have related the nature of compressive and shear

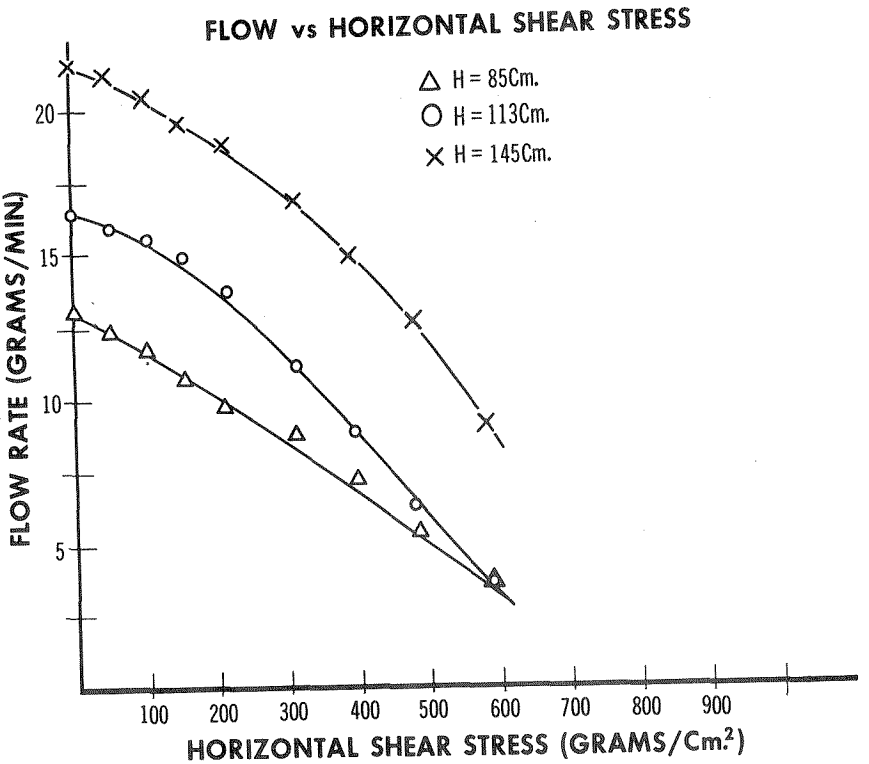

FIGURE 6.—Vessel flow as a function of horizontal shear stress.

forces so developed. In brief, compressive stresses may be expected to be closely associated with the squeeze of flesh between socket and bone; shear stresses usually correlate with the gradient of compressive stress, achieving maximum values where compressive stress increases or decreases sharply. Pinch shear will become large where the stump stiffness changes drastically—for example, in the vicinity of muscle or bone.

The results suggest that while all stresses act to impede flow, pinch shear is particularly likely to cause stasis. Unfortunately, given the various stress types, pinch shear is the least capable of manipulation due to its anatomical basis.

It is generally believed that a well fitted artificial leg will augment blood and lymph flow through the stump. Perhaps this is so, but this work indicates that static loading, as arises from standing or sitting for a long time, produces the opposite effect. It is possible that oscillating pressure effects, not considered in this work, are highly significant to fluid pumping. Future efforts will examine this point.

ACKNOWLEDGMENTS

This work was supported by the Research Center for Prosthetics of the Veterans Administration. Dr. Eugene F. Murphy of that organization, acting as this project's monitor, has suggested many of the concepts exploited in this series. Aerospace graduate students John Rosenbach and John Van der Wal performed much of the experimental and data reduction work.

REFERENCES

1. Scales, John T.: Air for Patient Support Systems. Engineering in Medicine, 2(1):10-17, Jan. 1973.
2. Appoldt, F. and L. Bennett: Dynamic Socket Pressures. Bull. Prosthetics Res., BPR 10-8:20-55, Fall 1967.
3. Poets, R.: The Fitting of the Above Knee Stump. Ortho. and Pros., 28(1):28, Mar. 1974.
4. Bennett, L.: Transferring Load to Flesh: Part II. Analysis of Compressive Stress. Bull. Prosthetics Res., BPR 10-16:45-63, Fall 1971.