HIGHLIGHTS OF OTHER VA RESEARCH PROGRAMS

PROSTHETICS

Edited by

Eugene F. Murphy, Ph. D., Director

Research Center for Prosthetics
Veterans Administration
252 Seventh Avenue
New York, N.Y. 10001

Prosthetics, Orthotics, and Sensory Aids Research Services
Committee on Prosthetics Research and Development, and
Committee on Prosthetic-Orthotic Education
Division of Medical Services—Assembly of Life Sciences
National Research Council—National Academy of Sciences
2101 Constitution Avenue, N.W.
Washington, D.C. 20418
Frank W. Clippinger, Jr., M.D.

Activities of the National Research Council in prosthetics, orthotics, and sensory aids, which began during World War II, have slowed down substantially in recent months for a variety of reasons. Following resignation of Mr. A. Bennett Wilson, Jr., as Executive Director and the untimely death of Mr. Hector Kay, Dr. James B. Reswick of Rancho Los Amigos Hospital, Downey, California (a former member of the Committee on Prosthetics Research and Development) for some months served as Acting Executive Director on a part-time basis, committing part of each week to Washington, D.C., although remaining in Los Angeles, California. An ad hoc group of Committee members, assisted by Dr. Reswick and remaining staff members, made vigorous efforts to complete texts, obtain reviews, and publish a backlog of reports and minutes of past conferences, workshops, and meetings.

A planned workshop on lower-limb prosthetics, including skeletal attachment, was cancelled. Arrangements for a workshop on low-vision mobility were made, largely by efforts of Mr. Peter Nelson. It was conducted November 3-5, 1975, through a contract between Western Michigan University and the Veterans Administration. The report will be published by the Veterans Administration.

Reorganization and expansion of CPRD/CPOE as a Board for Rehabilitation Engineering was proposed several years ago by an ad hoc committee chaired by Dr. G.T. Aitken. Decision by the National Academy of Sciences officials on this proposal has been repeatedly postponed awaiting the report of a Visiting Committee (which was not published) and currently that of the Committee on Rehabilitation Research Needs of the Nation (still pending). Meanwhile the CPRD/CPOE, chaired by Dr. Clippinger, continues to exist, and it is available to assist in developing plans for further advisory and coordinating services.

Research and Development in the Field of Artificial Limbs
Mauch Laboratories
3035 Dryden Road,
Dayton, Ohio 45439
Hans A. Mauch and Glendon C. Smith

The development of the Hydraulic Swing and Stance Control (S-N-S) System has been completed and reporting will now be discontinued.

Work on the Hydraulic Ankle Control System, which has been going on with the highest priority, has resulted in a number of additional test findings and subsequent design improvements. It has culminated at the end of the reporting period in the first lower-limb prosthesis, ready for testing, which contains all the elements of the Hydraulic Ankle Control System; namely, a. the hydraulic control unit, b. the polyurethane foam foot including the hollow aluminum keel to support the hydraulic control unit inside it and the cosmetic foot/shank transition, and c. the special shank incorporating the extruded aluminum tubing for the attachment of the upper portion of the hydraulic control unit (Fig. 1-4).

The design improvements include:

1. The lid on the top of the hydraulic unit inside the shank tubing is no longer made of aluminum but consists of a molded Silastic plug for a better seal and for noise confinement.

2. Gaps which formed at the top of the foam foot sleeve between the sleeve and the shank inside it, at extreme plantar flexed and dorsiflexed positions, were eliminated by molding into the sleeve a helically wound non-stretchable string.

3. A new, stronger cement was found for attaching the top opening of the rubber boot of the hydraulic unit to the aluminum neck of the piston rod, in order to eliminate leaks which occurred at that location as a result of shear forces produced by the weight of the amputee.

4. The two U-seals on the vane piston inside the hydraulic unit are now made of Viton rubber for better tolerance-control and longer life.

5. The clearance for the front part of the hydraulic unit inside the aluminum keel was increased, to prevent piercing of the rubber boot at extreme eversion/inversion positions.

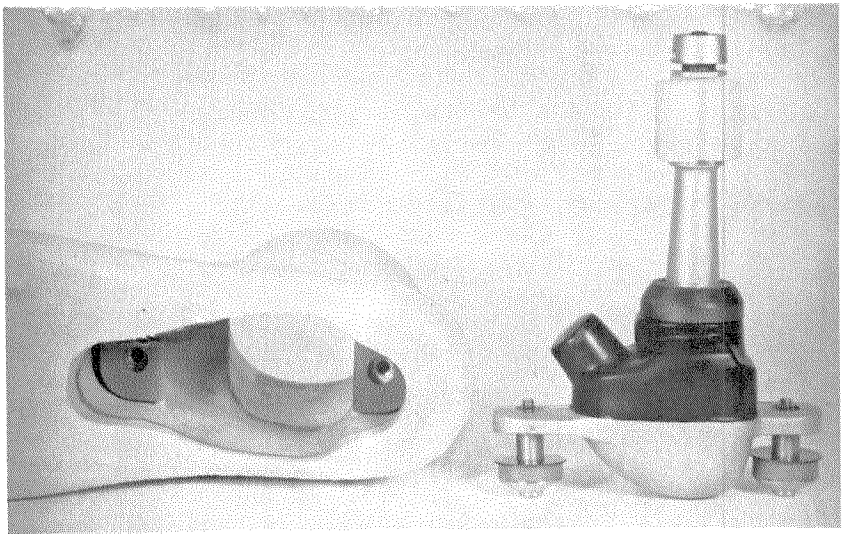

FIGURE 1.—Hydraulic ankle unit and view into underside of foam foot showing attachment holes for unit.

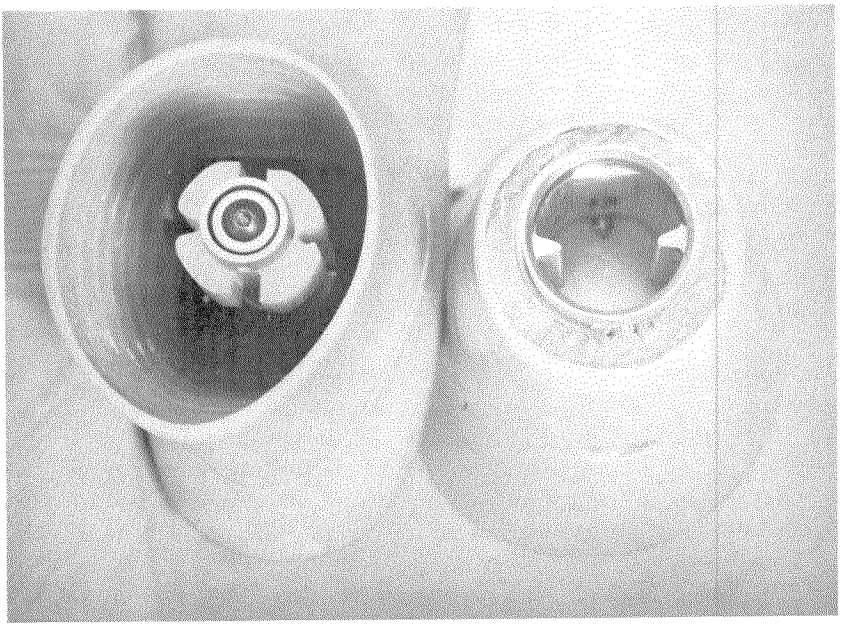

FIGURE 2.—Foot seen from top with hydraulic unit installed; also view into lower part of shank showing extruded aluminum tubing and one holding screw.

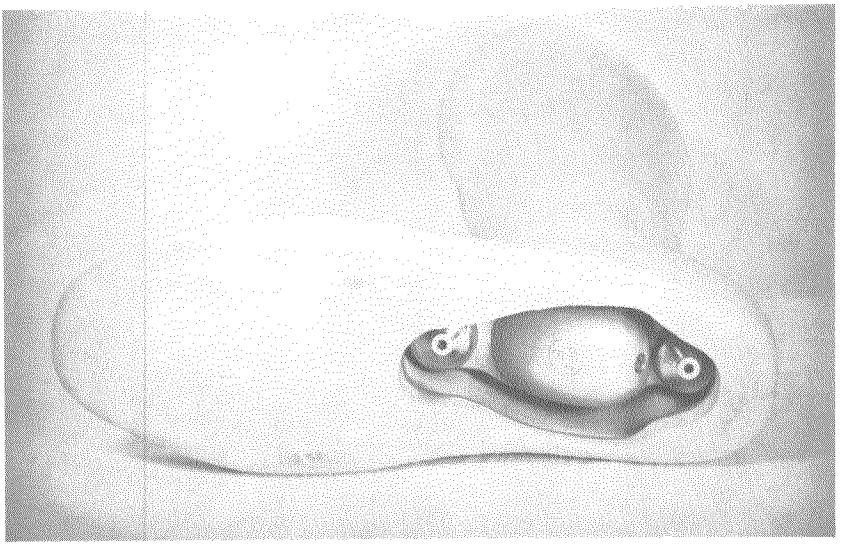

FIGURE 3.—Assembled shank, foot, and hydraulic unit seen from beneath.

FIGURE 4.—Complete foot assembly showing access hole for front holding screw which can be plugged in use.

6. Two noise sources were eliminated by preventing migration of a roll pin which traverses the piston rod, and by placing the Teflon film formerly used on the surface of the paddle-shaped piston rod tip, on the surface of the surrounding rubber bumpers instead.

Three production-prototype hydraulic ankle control units have been assembled, and all the component parts for nine additional units have been completed.

The development of a simpler hydraulic knee control system for geriatrics, based on the stance control principle of the S-N-S System, has started.

The development of a low-friction long-life rubber sealing ring ("N" ring) (Fig. 5) for the main piston in all our hydraulic knee control systems has been completed.

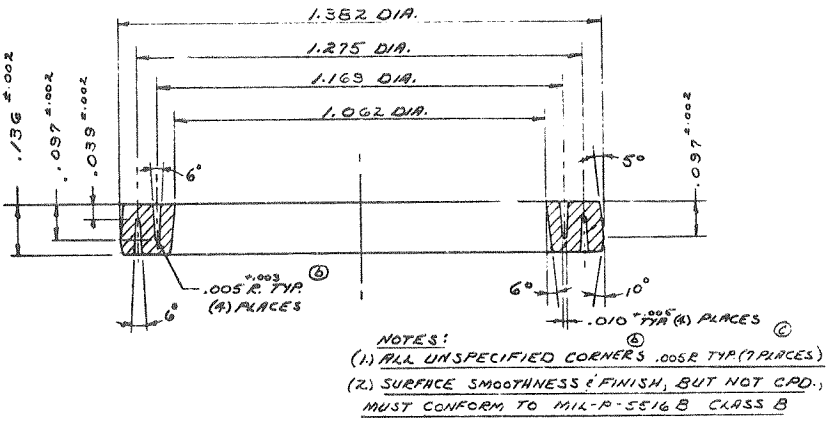

FIGURE 5.—"N" Ring functions like two U-seals back-to-back.

Good progress has been made in the development of a simplified new knee bolt for AK prostheses which permits better control of sideplay of the knee block, facilitates installation and disassembly, and costs less than the present standard bolt. In a field test conducted throughout the country in cooperation with VA Prosthetics Center, New York, the new bolt held up well in 10 out of 12 amputee cases. In two cases one of the two screws of the new bolt design came loose during intensive sports activities. Contingency plans prepared for such a finding were implemented. The chances for a final success appear good.

Stump Stress Analysis
New York University, Division of Applied Science
26-36 Stuyvesant Street
New York, New York 10003
Leon Bennett, M.A.E.

Flexible brim sockets, issued in small numbers to AK amputees, have failed to demonstrate an adequate life span. Mechanical failure in the brim vicinity develops within several months of use. Such failures are viewed as surprising, for the reason that considerable model fatigue

testing was performed satisfactorily in the laboratory before the socket was issued for pilot field testing. It follows that the laboratory testing was incomplete in some serious respect.

One omission in the laboratory consisted of the effect of environmental factors, such as the presence of perspiration and elevated temperatures within the socket. Therefore, recent laboratory testing has employed model socket sections operating under conditions of saturation in perspiration and temperatures elevated to 108 deg F. The results, in the case of polyester-based socket sections, do not indicate either perspiration or elevated temperatures to be significant factors in flexible socket breakdown. Those factors found to be significant include discontinuities in cross-sectional thickness, porosity, and discontinuities at the fabric-resin interface. Of these, the last is the most powerful in its effect; most specimen cracks arise where the individual thread elements join a resin-rich area.

Experiments are continuing, with the view of producing a flexible AK socket capable of accepting full load without premature failure. The particular area to be examined in detail is the mechanical bond between the resin and the reinforcement cloth. The effect of mesh size and the chemical nature of the cloth will be investigated.

Prosthetics Research
Northwestern University, Prosthetic Research Laboraory
Room 1441, 345 Superior Street
Chicago, Illinois 60611
Robert G. Thompson, M.D., and Dudley S. Childress, Ph. D.

Technical drawings have been submitted to the Veterans Administration for the "synergetic" hook, a powered hook terminal device. Drawings have also been prepared and submitted for a new modular wrist unit which contains the battery and myoelectric controller for this hook. This new wrist unit is completely modular and permits hook-hand interchangeability by the amputee. Electrical connections are made automatically when the hook or hand is screwed into the friction wrist. Along with the advantages of modularity, hook/hand interchangeability, and external adjustment of wrist friction, the wrist is slender, permitting its use with a wide range of forearm sizes. The production of small numbers of prototypes of this wrist and of the hook is anticipated in the near future. Fabrication instructions for the wrist unit are being prepared.

The new prosthetic fittings of the thoracic suspension harness for above-elbow amputees have been completed. A report on this harnessing technique is being prepared.

The Laboratory has been cooperating with manufacturers concerning the production of the live-lift-lock mechanism. There has been considerable interest within the prosthetic community in the commercial

availability of this mechanism for the standard, dual-control, body-powered above-elbow prosthesis.

Experiments have been continued with self-suspension sockets for the long below-elbow amputee in which the socket trim line is well below the humeral epicondyles. The idea is to obtain self-suspension while maintaining a substantial portion of residual supination-pronation.

Experiments have begun on a multifunctional arm for shoulder-disarticulation amputees. Adequate components, and a control theory which gives promise of subconscious control, have now been brought together.

The Laboratory is participating with several Rehabilitation Engineering Centers in the evaluation and refinement of the lightweight below-knee prosthesis constructed of vacuum-formed polypropylene.

Fundamental and Applied Research Related to the Design and Development of Upper-Limb Externally Powered Prostheses

University of California, Los Angeles
School of Engineering and Applied Science
Biotechnology Laboratory, 3116 Engineering 1
Los Angeles, California 90024
John H. Lyman, Ph. D., Amos Freedy, Ph. D., and Ronald Prior, Ph. D.

Research activities at the UCLA Biotechnology Laboratory during the last half of 1975 have been as follows:

1. Design, development, and comparative study of various myoelectric control systems for the VA/UCLA artificial arm.
2. Development of sensory feedback system techniques for more than one degree of freedom.

Specifically, three versions of prostheses, with their associated control systems, have been designed. These are:

1. A two-degree-of-freedom arm (elbow and hand);
2. A three-degree-of-freedom arm (elbow, wrist, and hand); and,
3. A four-degree-of-freedom arm, using pattern recognition techniques for humeral, elbow, and wrist movements.

The first two prostheses have been constructed as prototypes, amputees have been fitted and trained, and the results have been summarized. Development of the third prosthesis is at the stage where several software techniques are under evaluation to provide complete specifications for implementation on a microprocessor.

The sensory feedback project has resulted in a prototype system capable of relaying hand grasp and elbow position simutaneously to an electrocutaneous electrode array. A preliminary evaluation has been made. Ongoing research centers around optimal design of the electrode array interface and its subsequent evaluation.

The VA/UCLA Two-Degree-of-Freedom Arm Prosthesis

The purpose of this project was the design and implementation of a myoelectric control system for the VA electric hand and elbow assembly.

Mechanical modification included a feedback potentiometer installed in the VA hand on the finger drive gear. This potentiometer monitored the degree of finger opening, relaying the information back to the control system. The total weight of the prosthesis is 3.5 lb.

Myoelectric control sites were chosen on a long above-elbow (AE) amputee. Residual biceps and triceps muscles were identified for elbow control, and the upper pectoral muscle was used for hand opening/closing. Myoelectric signal amplifiers in a miniature package were designed on a single IC chip (L144) including several passive components. The package is 0.5 in. wide and 0.5 in. thick when encapsulated in its transparent housing of methyl methacrylate and provides 40 dB, with an additional 50 dB adjustable gain. Silver was chosen as the electrode material; it was mounted on the plastic to provide interference-free pickup through the skin.

The control system provides push/pull action from triceps/biceps to control the elbow in a natural manner.

The hand control system consists of a position-follower servo that permits reliable control from a single muscle site. Increasing the myoelectric signal level opens the hand proportionally; conversely, decreasing the level closes it in the same manner. Relaxation of the muscle locks the hand in any chosen position while a single twitch will finely adjust the grasp pressure.

The complete electronics package consumes only 200μA standby current because of the use of low-power components.

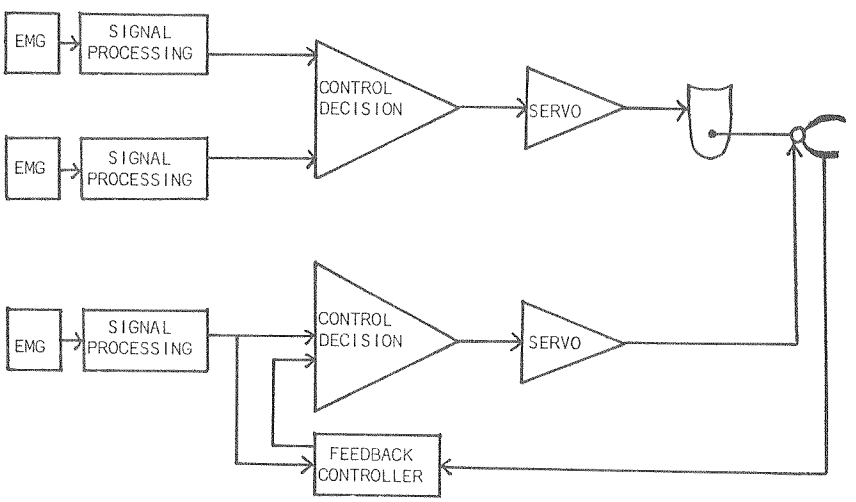

FIGURE 6.—Block diagram of the control system for VA/UCLA Two-Degree-of-Freedom Arm.

A block diagram of the control system is given in Figure 6. The functional specifications are given in Table 1.

TABLE 1. — *Specification of Two-Degree-of-Freedom Arm*

Actuators:	VAPC elbow, VA/NU hand
Weight:	2.75 lb; 3.5 lb complete with socket, harness, and battery
Power supply:	12-18 V d.c.
Standby current drain:	200μA
EMG amplifier gain:	40 dB (+ 50 dB adjustable)
Hand opening:	1 sec max
Hand closing:	1 sec max
Elbow flexion:	2.2 sec unloaded
Elbow extension:	1.5 sec unloaded
Harness:	Saddle type
EMG electrodes:	3 pair

Space for the power pack was gained by special socket construction providing an additional 2½ in. between the end of the stump and the elbow motor. This space accommodated the VA power pack as well as the electronics support system. The electronic control system was mounted on a modular board with connectors to EMG amplifiers, battery, and actuators. Such an approach makes a simple and quick task of adjustment, repair, or change to a different control version.

A special harness assembly was made in cooperation with the VA Hospital, Wadsworth, Calif. (Sawtelle). The harness consisted of a saddle-type design which had a leather component tightly fitted around the shoulder girdle and which allowed mounting of myoelectric signal amplifiers on the pectoral, trapezius, deltoid, and latissimus muscles. Donning and doffing were simple.

Thirty-four years after amputation, a 2-wk training program brought the amputee's biceps, triceps, pectoral, and trapezius muscles to acceptable working condition where 50–70 dB of amplification would operate the system. The training program consisted of 1 hour each day during which each chosen muscle site was monitored with skin electrodes connected to an EMG amplifier. The signal was displayed to the amputee on the oscilloscope. The subject was asked to maintain his integrated

EMG level as high as possible for several seconds, and to pulse it for several seconds. Improvement in EMG level was observed within two days after training was instituted, and within 10 days satisfactory EMG levels were obtained in all muscles.

One hour of training was needed for the subject to control the hand in a satisfactory manner, and no training was needed to operate the elbow. A 16mm film was prepared and has been submitted to the VA; it shows the subject operating the prosthesis after one hour of training.

During additional practice, the following observations were made:

1. The amputee became capable of operating the prosthesis in a coordinated motion where both elbow and hand were functioning simultaneously; he was also able to separate the functions of the elbow and the hand when necessary.
2. The amputee indicated that although the prosthesis weighed more than his conventional prosthesis which he was used to, its operation was "much" easier and the improvement compensated for the additional weight.
3. Full range of motion was available without accidentally triggering any actuator, and operation of both actuators was possible at any position.
4. The subject was so adept in the use of shoulder relative motion with his cable device that he found it difficult to operate the new device without moving his shoulder, even though it was not necessary to do so.
5. The VA battery power pack would not last more than 1½ to 2 hours.
6. The four battery chargers that were provided for the tests all developed defects and failed.

The VA/UCLA Three-Degree-of-Freedom Arm

The three-degree-of-freedom prosthesis consists of the VA elbow, a modified VAPC elbow serving as a wrist rotator, and the VA hand. The device weighs 3.25 lb without the socket and harness, and 3.75 lb with them. The battery adds .25 lb, bringing the total prosthesis weight to about 4 lb. The same socket and harness configuration was used, except that an additional EMG electrode set was mounted on the harness above the upper trapezius muscle to provide a single-site control of the wrist.

Mechanical modifications of the elbow motor included fabrication of a new cylindrical case and elimination of the limit switches. Limiting of the motor rotation was achieved by two wiper-and-conductive-strip assemblies spaced so that 160 deg rotation was possible. The limiting assembly was mounted on the cover of the actuator; this also avoided the wire breakage that was a problem in an earlier design.

In addition, an adjustable linkage was designed which allowed forearm length adjustment of up to 3 in.

The control system consists of a push/pull operation of the elbow from the triceps/biceps, control of the hand by a single-site position-follower,

and a quantitized single-site operation of the wrist. The first two subsystems were described in the previous section of this report.

The wrist control uses two-level myoelectric inputs; a strong muscular contraction supinates the wrist and a weak contraction pronates the wrist. Relaxation of myoelectric signal inputs at any position locks the wrist in that position.

A 2-hr training session was sufficient to bring about efficient functional operation of the prosthesis with simultaneous control of the elbow and wrist in any configuration. Some accidental triggering occurred, but it appeared to be less frequent as training trials proceeded.

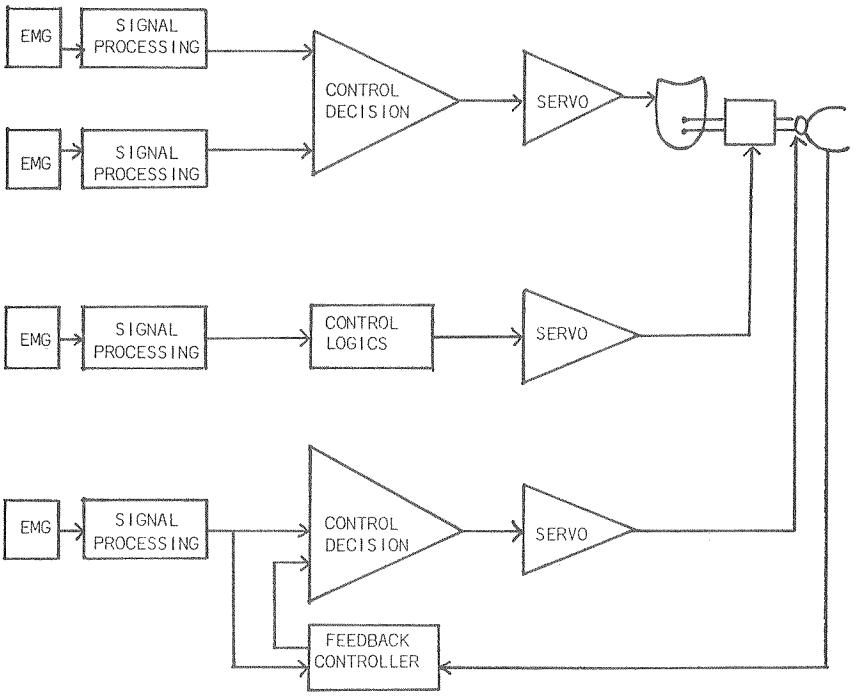

FIGURE 7.—Block diagram of control system for VA/UCLA Three-Degree-of-Freedom Arm.

A block diagram of the control system is given in Figure 7. Functional specifications are given in Table 2.

The VA/UCLA Four-Degree-of-Freedom Arm with Computer-Aided Control and Pattern Recognition

The laboratory version of the arm with four degrees of freedom was constructed to include humeral rotation, elbow felxion and extension, wrist rotation, and prehension. Only the first three functions were used in

TABLE 2.—*Specifications of Three-Degree-of-Freedom Arm*

Actuators:	VAPC elbow, modified VAPC elbow used as wrist rotator, VA/NU hand
Weight:	3.25 lb; 4.0 lb complete with socket harness and battery
Power supply:	12–15V d.c.
Standby current drain:	350μA
EMG amplifier gain:	40 dB(+ 50 dB adjustable)
Hand opening:	1 sec max
Hand closing:	1 sec max
Elbow flexion:	2.2 sec unloaded
Elbow extension:	1.5 sec unloaded
Wrist rotation:	2 sec max full range
Harness:	Saddle type
EMG electrodes:	4 pair

developing myoelectric pattern recognition and classification alternatives, because multiple-joint coordinated pointing of the hand to a selected point in space was the principal funtional criterion to be achieved.

The basic arm was essentially the same as the three-degree-of-freedom arm with the addition of another modified VAPC elbow unit as a humeral rotator. It was not fitted to an amputee, but was tested while mounted on a stand, with remote control by the subject.

The control systems that were developed centered around a computer interpretation of myoelectric signal patterns from nine electrodes. In it, "n" electrode signal sources are mapped into "m" classes of patterns. Each pattern is used as a unique control signal to the arm, as signals from "n" control muscle sites are transformed into "m" prosthesis joint control signals. (In contrast, in the conventional approach, each control site is uniquely linked to an arm joint.)

Additionally, the control system provides adaptive mapping to "teach" the computer each patient's individual myoelectric patterns, and create a personalized system. Rather than requiring the subject to fit his myoelectric pattern to some standard, the effort was made to fit the system to the amputee's peculiarities.

The overall control process involves the continuous reading of patient electrode signal vector $\bar{e}$ and its mapping into a specific motion command. Figure 8 illustrates the functional organization which is associated with this control.

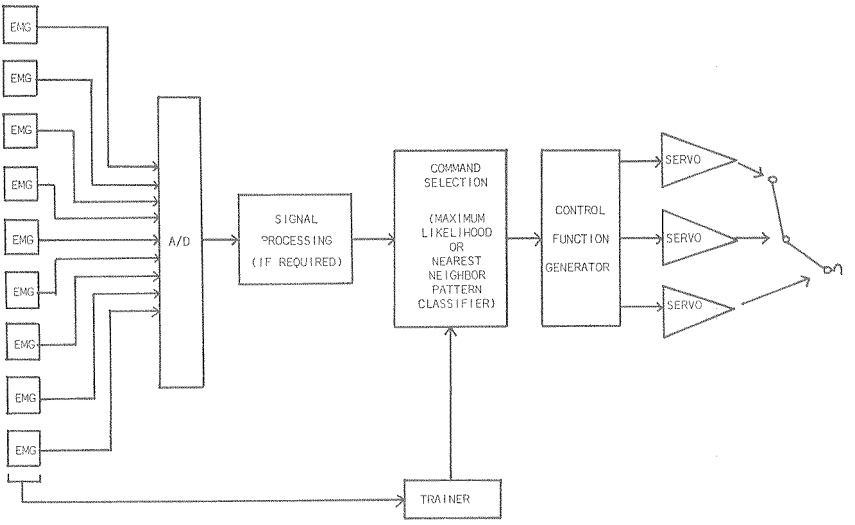

FIGURE 8.—Block diagram of the control system using pattern classifier techniques.

Two pattern-classification schemes were implemented: a maximum likelihood decision (MLD), and a nearest neighbor classifier (NNC). Each classification scheme employs a different discrimination function with unique advantages.

In the Maximum Likelihood Decision (MLD) network, a directional decision is selected on the basis of its likelihood as computed by using Bayes' rule and a selected loss function. The observed pattern of myoelectric activities from a series of surface electrodes is used to calculate the relative levels of likelihood in the various possible directions. If the objective value of the likelihood is less than some arbitrarily chosen confidence level, presumably because the electrical signals are merely small random "noises" from occasional firings of motor units, remote muscles, artifacts from electrode motion, or pickup of stray field, the final decision vector is equal to (0,0,0): that is, each function of the arm is allowed to stand still.

Scalar decision functions greater than the chosen confidence level are mapped into the corresponding vectors and used to control motions of the prosthesis.

The Nearest Neighbor Classifier (NNC) method likewise starts with a pattern of electrical activities from a group of skin electrodes. A training routine, in which the amputee voluntarily attempts to tense specific muscle patterns corresponding to the motions he wishes, is used initially to determine proper values of 27 locator rows, each corresponding to some combination of humeral, elbow, and wrist motion, each in one of two possible directions or with some or one remaining stationary.

During use, the observed myoelectric pattern is compared with each of the 27 possible desired values or possible motor states. The value with the minimum difference is taken to be the direction in which to move the arm.

Details of the mathematical concepts involved are available from UCLA.

An evaluation study of each scheme was conducted with the following objectives:

1. To optimize program variables in terms of their range;
2. To evaluate the effectiveness of two types of pattern recognition algorithms;
3. To assess the amount and type of training which is required in order to obtain acceptable performance levels;
4. To assess subject control performance.

Preliminary experiments were run on 29 normal subjects from an elementary psychology class at UCLA. The learning process and experimental run consumed approximately 2 hr in total for each subject. An oscilloscope display was used to simulate end-point motions of the arm prosthesis on a two-dimensional screen. Performance was measured by asking the subjects to move a dot on the screen in various directions (each directional movement represented a control decision), and then measuring the time required to obtain the proper response. Four categories of response quality were used.

1. *Excellent:* Proper movement obtained in less than 0.5 s and continued during the execution with 2-or-less erroneous decisions.
2. *Good:* Proper movement obtained in less than 1.0 s and continued with 4-or-less erroneous decisions during executions.
3. *Fair:* Proper movement obtained in less than 1.5 s and continued with 6-or-less erroneous decisions during executions.
4. *Poor:* Performance deemed less than Fair.

Training was verified by actual control of the arm on the test stand.

The experiment started by training two directions, usually left and right. The subject was allowed to practice for several minutes and any difficulties were noted. These difficulties were alleviated by supplementing the training or by re-starting the training from the beginning.

The preliminary evaluation met each objective as follows.

1. *Program Variable Optimization*

Optimization of the variables was achieved for both systems. The vari-

ables included: myoelectric signal sampling size and electrode placement for both systems; and (for the MLD system) confidence level, calibration methods, and number of myoelectric signal mapping levels.

2. *Comparison of the Two Pattern-Recognition Algorithms*

It was found that subject performance using the NNC was superior to that using the MLD classifier. Subjects were able to train in shorter periods of time with NNC than with MLD. More directions could be trained with NNC than with MLD. Finally, NNC is both smaller (in terms of program size) and faster (in terms of execution speed). Although NNC was found to be superior to MLD, its effectiveness has not yet been fully evaluated.

3. *Amount and Type of Training*

Total training time for MLD is between 20 and 30 min initially, followed by another 20 to 30 min of supplementary training as more direction decisions are added to the system. Performance using up to 9 decisions (humeral and elbow combinations) can be trained in this manner to an acceptable level of performance. Degradation of performance results when less than 9 decisions are trained.

Total training time for NNC is between 10 and 15 min initially, followed by 10 to 15 min of supplementary training, as with MLD. Acceptable performance with up to 11 directional decisions has been noted after such training (humeral/elbow combinations plus wrist pronation and supination). NNC's limitations were not fully evaluated.

Both systems require longer supplementary training periods as the number of direction decisions trained increases.

4. *Subjects' Control Performance*

For both systems, the following features were observed: a. Humeral/elbow movements were easier to train than wrist movements (adding wrist movements to the system caused a greater decrease in accuracy of control than adding humeral/elbow movements); and b. The greater the number of electrodes, the more accurate the control.

For the MLD system, the following observations were made: a. 9 direction decisions with as few as 6 electrodes—good performance (humeral/elbow movements); b. 9 direction decisions with 9 electrodes—excellent performance (humeral/elbow movements); and c. 11 direction decisions with 9 electrodes—fair performance.

A graph describing the results for the MLD system is presented in Figure 9.

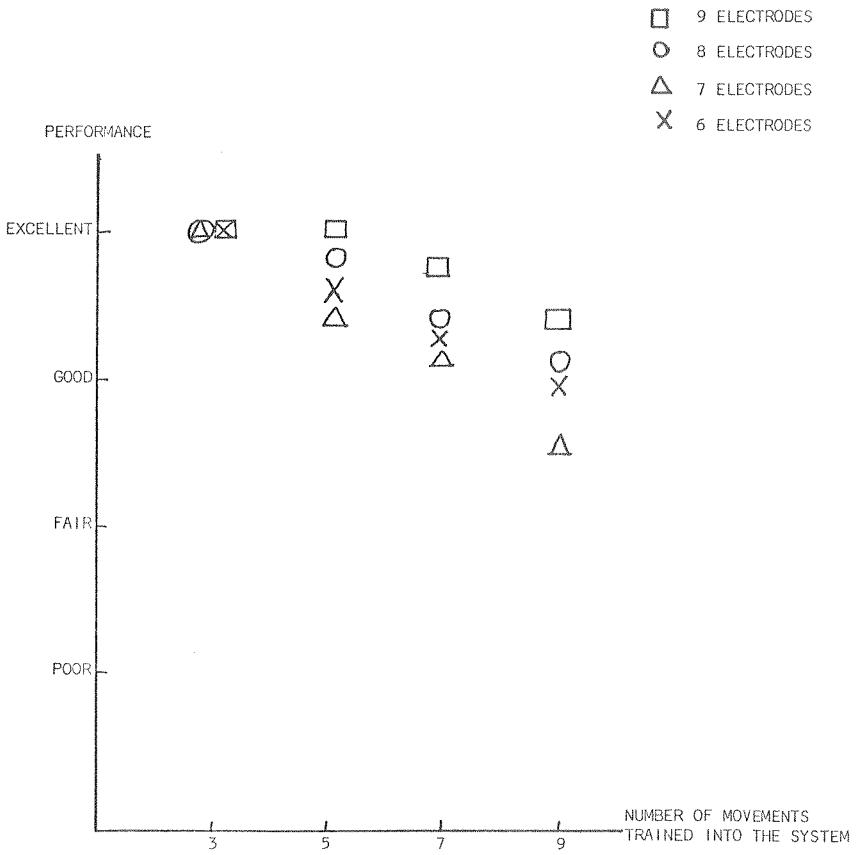

FIGURE 9.—Maximum Likelihood Decision (MLD) system: Graph indicates a decrease in performance as more movements are trained into the system.

For the NNC system, the following observations were made: a. 9 direction decisions with 8 electrodes—excellent control (humeral/elbow movements); and b. 11 direction decisions with 9 electrodes—good-to-excellent control.

Evaluations are still in progress for the NNC system.

Sensory Feedback

The objective of the sensory feedback investigations was to provide the amputee with two of the most necessary feedback parameters concerning his hand: grasp, and elbow angle.

A sensory feedback system was designed and implemented using electrocutaneous stimulation as the communication means. In order to relay two simultaneous channels to the skin, psycho-physiological

properties such as the ability to respond to frequency variations, and to two-point discrimination, were utilized. An electrode matrix was used as an interface in which elbow travel of more than 20 percent switched the frequency-modulated signal from one electrode to the next. Fingertip grasp pressure varied the frequency of the signal from 5 Hz to 120 Hz at whichever electrode it appeared. Preliminary results showed that, without vision, subjects were capable of correctly estimating elbow location or hand grasp, following 30 min of training. In addition, the transient signal in intermediate electrodes when the elbow traveled more than 20 deg indicated to some subjects the velocity of the elbow. A functional diagram of the system is given in Figure 10.

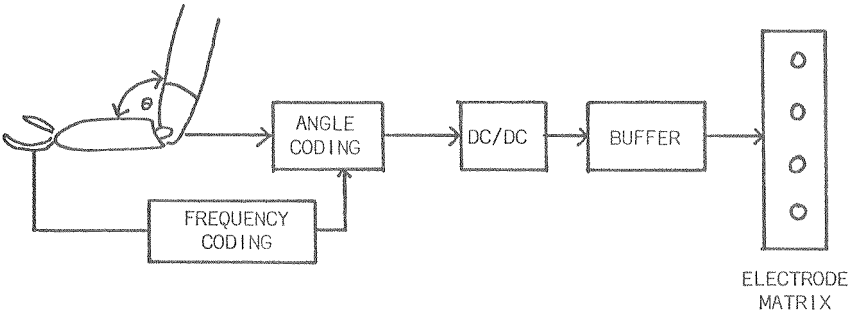

FIGURE 10.—Functional diagram for the sensory feedback system.

Several electrode configurations are being tested under a parallel HEW-sponsored project in order to define optimal management regarding size, information content, information speed, reliability of perception, and other parameters.

Design of Prosthetic and Othotic Devices and Biomechanical Studies of Locomotion

Biomechanics Laboratory
University of California, Berkeley
5144 Etcheverry Hall
Berkeley, California 94720
Charles W. Radcliffe, Don M. Cunningham, and James M. Morris, M.D.

Design of Lower-Limb Prosthetic and Othotic Devices

1. Four-Bar-Linkage Polycentric Pneumatic Knee

The original 20 pre-production units have performed well in amputee trials at several locations. Design revisions based on feedback from the

clinical trials are underway. Objectives of the revisions include conversion to 35mm pylon tubing with a more durable pylon attachment, more secure attachment of pivot pins to side links, and more simplified manufacture. VAPC intends to obtain an additional 50 units.

2. UC-BL Shank Axial-Rotation Unit

The final report of clinical findings in tests of 50 units obtained by VAPC has not yet been received. Preliminary results indicate generally good durability, with a few failures in the bonding of the rubber return spring and occasional loosening of the four screws which couple the two halves of the unit together.

3. Internal-Expanding Foot-to-Pylon Coupling

The simplified design reported in previous issues of the BPR has been made easier to manufacture through the use of standard aluminum tubing for the expanding collar. The angle of the conical expansion rings has been optimized at 20 deg, which provides excellent clamping action with no tendency for self-locking. The coupling is shown in cross section in Figure 11 as it is utilized in the new SACH foot. The same concept can be used to attach pylons to knee mechanisms, or SACH feet to pylons.

4. SACH Foot with Metal Keel

Two prototype aluminum keels have been machined, and molded into SACH feet through the assistance of Hosmer/Dorrance Corp. and the Navy Prosthetics Research Laboratory in Oakland, California. As shown in Figure 11, the tip of the keel rests on a shaped block of solid Neoprene rubber which provides a cushioning effect and allows easy lateral bending on sideways sloping surfaces.

Walking trials by an experienced AK amputee provided very favorable responses. The large heel cushion and the rubber block under the keel provide unusually smooth progression from heel to forefoot weight-bearing, and the freedom of lateral twisting of the forefoot was very welcome.

The incorporation of the pylon coupling into the keel structure eliminates the weakest link in conventional SACH foot design, the pylon coupling, and simultaneously saves weight and provides more freedom for cosmetic shaping of slender ankles.

5. Six-Bar-Linkage Knee Unit with Friction Swing-Control

This compact and lightweight knee has received considerable attention during this report period because of its promise for through-knee as well as above-knee amputees. A prototype two-piece cosmetic cover with one-piece elastic stocking covering has been fabricated with good result.

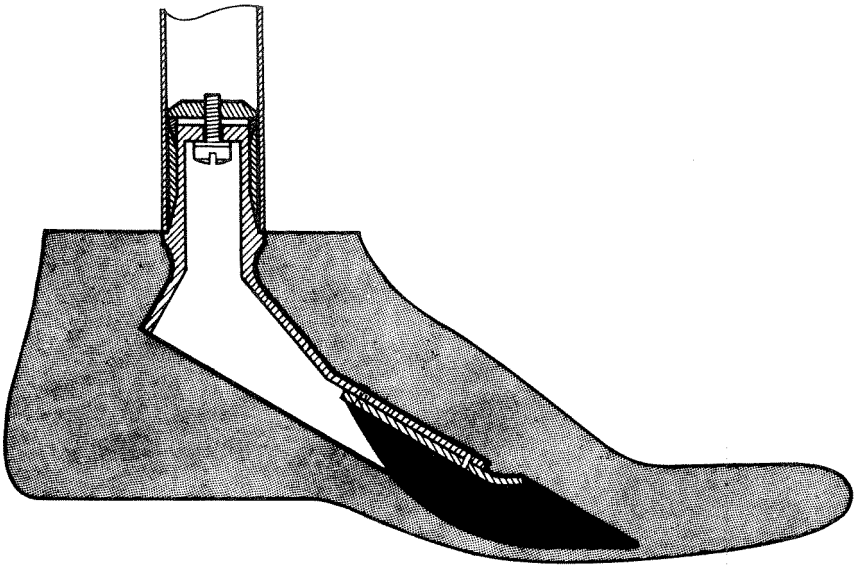

FIGURE 11.—A molded SACH foot incorporating an aluminum channel-section keel with integral internal-expanding coupling for 35mm pylon tube. A shaped block of solid Neoprene is attached to the tip of the keel before molding. Size adjustments are made by shortening the distal end of the channel section before mounting the Neoprene block.

Amputee testing of the device will continue on an accelerated basis in collaboration with the Navy Prosthetics Research Laboratory, which plans to build 12 prototype units.

Biomechanical Studies of Human Locomotion

1. Ankle Motions During Walking

The ankle motion instrumentation described in previous issues of the BPR has been applied to a normal subject walking on the treadmill at three different speeds with three different heel heights and various angles of toe-in and toe-out. Measurements of angular motions between shank and shoe are obtained about arbitrary reference axes and then transformed into equivalent anatomic joint motions by a computer program. For the computer to accomplish the transformation it is necessary to specify assumed locations of the anatomic joints involved, which are the ankle joint, the subtalar joint, and the axis about which the calcaneus moves within the shoe during pronation and supination.

Quite precise estimates of ankle and subtalar joint locations can be obtained from palpation and observation of relative motions, but the location of the axis about which the calcaneus moves within the shoe is more obscure. Preliminary efforts to locate this axis were based on

measurements of motion of an aluminum strip fitted to the calcaneus. They indicate that the axis of calcaneal rotation is located in the proximal portion of the calcaneus. It is highly inclined, sloping medially and posteriorly.

The location of this axis of calcaneal rotation appears to be influenced by the nature of the motions which are possible at the mid-tarsal joint. Improved methods for locating the axis are being sought, both for purposes of the computer transformation and for further clarification of the role of the mid-tarsal joint in foot function.

2. *Unequal Leg Length and Low-Back Pain*

An investigation of the locomotor effects of unequal leg length has been undertaken in collaboration with a local physician who sees numerous patients complaining of low-back pain, many of whom exhibit unequal leg lengths. A preliminary requirement for the study is a practical and precise method of measuring leg length. Special fixtures have been prepared to standardize an X-ray technique for leg length measurement, which will be used to evaluate the reliability of non-invasive palpation techniques for assessing pelvic list. Preliminary gait measurements indicate that subjects with unequal leg lengths have a prolonged stance phase on the shorter limb and take a longer stride in distance with the longer limb. The various measurement techniques will be used to evaluate the required amount of leg length correction needed by specific patients, and patient progress will be followed to assess the effect of leg length equalization on the symptoms of back pain.

3. *Instrumentation for Clinical Gait Evaluation*

A portable step-dimension walkway has been completed, which permits measurement of average velocity, step frequency, and step length of completely unencumbered subjects walking on any surface. Also completed is a real-time display for hip/knee angle diagrams of right and left legs simultaneously. The self-aligning goniometer apparatus which provides measurements for the angle diagram display is undergoing revision for simplified and more precise fitting. The walkway and angle diagram instruments are being coupled together so that foot contact data for the step dimension calculations can be provided by the angle diagram foot switches whenever the two devices are being used together. A new, more reliable foot contact switch made up of layers of fine stainless steel screen has been developed for use with this equipment.

Plans are underway to use this portable equipment to examine gait motions in subjects who cannot conveniently be brought to the Locomotion Laboratory. Effects of knee injury, hip and knee joint replacement, and prosthetic and orthotic devices will be examined.

Evaluation and Further Development of New Designs for Back Braces

Studies of the effects of wearing polypropylene jackets are continuing, as are studies of the effects of wearing various appliances in the reduction of intradiscal pressures. It has not been possible to do the studies of the effects of chymopapain injections on the mechanics of the spine because of new Food and Drug Administration regulations. As soon as this problem is resolved these studies will be initiated.

Mobility Aids for the Physically Disabled

The first of seven PRAHN (Powered, Reclining, Adjustable Height and Narrowing) wheelchairs was tested in Berkeley by project personnel who commuted to work in the chair off-and-on for 2 months. The results were very encouraging, with the chair showing its versatility, high performance, and, in general, good reliability. Several minor changes suggested by these tests are being incorporated into the six chairs scheduled for VA tests.

Immediate Postoperative Prosthesis Research Study

Prosthetics Research Study
Eklind Hall, Room 409
1102 Columbia Street
Seattle, Washington 98104
Ernest M. Burgess, M.D.

Two Electromedical Projects

The Prosthetics Research Study has added two projects involving functional electrical stimulation. The first of these is under the direction of Marr P. Mullen, M.D., and A. J. Moore, Chief of Bioengineering Research at Prosthetics Research Study. Selected patients with scoliosis and occasionally spinal cord injury are being treated by electrospinal instrumentation (ESI) using paraspinal muscle electrode implants. The techniques developed by Walter Bobechko and associates at the University of Toronto, Canada, are employed. This project is being carried out in conjunction with the ongoing investigative work at the University of Toronto and certain other selected centers.

The second additional electromedical project is an outgrowth of our pain abatement studies. Electrical energy is being applied through surface electrodes to fresh soft-tissue trauma as a means of minimizing pain, controlling edema, and altering the early inflammatory response. The stimulation is being carried out as supportive therapy and does not replace accepted orthopedic treatment, when it is indicated, for such injuries as disruption of muscles, tendons, ligaments, capsular structures, etc. The major experience to date has involved amateur and

professional athletes. PRS is assisting to coordinate data obtained from sources nationwide to clarify the indication for this therapeutic agent.

We continue to study the effects of externally applied electricity for pain abatement, osteogenesis, muscle rehabilitation and muscle conditioning following surgery, trauma and disease states, for the prevention of contractures, and as a system of neuromuscular assist.

Comment on Other Projects

The technique of photogrammetry has been added to our other investigative agents in studying the muscle-grasping qualities of muscle-stabilized below-knee amputation as a means of suspension, and for design alterations, in below-knee socket configuration. Changes in limb configuration and firmness are evaluated relative to utilizing the limb itself as the primary source of suspension in below-knee amputees. These studies are to be extended to include other levels of amputation.

Laboratory investigation of the results of training of limb muscles is part of this work.

Our use of the Controlled Environment Treatment chamber (Roehampton technique) for the treatment of below-knee amputations immediately following surgery is now ready for a preliminary publication. Twenty below-knee amputations carried out since April 1973 have been treated with this method. A specially designed strain gage transducer of small size is sewn into the distal amputation site to record continously pressure changes as a measure of volume and edema alterations in the limb. Dr. Frederick Matsen and associates have been using the CET equipment to study crush syndromes of the limbs in experimental animals. Preliminary reports of their results have recently been published in American orthopedic literature. The CET equipment will soon be commercially available in the United States and Canada, with the background work of the Roehampton and Seattle PRS teams as a basis for its clinical use.

CET-treated below-knee amputees as well as other selected ischemic limbs continue to be investigated with Xenon 133 as a means of preoperatively determining appropriate level selection.

Amputation surgery continues active at the Veterans Administration Hospital, Seattle, Washington, and other University of Washington Medical School affiliated hospitals. Surgical techniques and immediate postsurgical management continue to be a primary source of investigative responsibility for the Prosthetics Research Study. Approximately 20 major amputations per month are performed by PRS personnel in a research capacity with close documentation and followup data by the PRS staff.

The Alternating Leg Pressure clinical study as a preventative system to control thromboembolic phenomena following total hip replacement surgery is now nearing completion. Documentation of our observations in this important area is ready for publication.

Below-Knee Amputation with Immediate Postoperative Fitting of Prosthesis

VA Hospital
4150 Clement Street
San Francisco, California 94121
Wesley S. Moore, M.D., Albert D. Hall, M.D., and Leigh A. Wilson

No progress report was submitted by this contractor for this report period.

Interdisciplinary Development and Evaluation of Externally Powered Upper-Limb Prostheses and Orthoses

Applied Physics Laboratory
The Johns Hopkins University
8621 Georgia Avenue
Silver Spring, Maryland 20910
Woodrow Seamone and Gerhard Schmeisser, Jr., M.D.

During the latter half of 1975, research at Johns Hopkins was primarily focused on conducting clinical testing with the experimental powered medical manipulator. After initial clinical testing was completed, modifications were made to the system to allow further investigation of patient interface controls.

Followup on clinical testing of previously fitted powered upper-limb prostheses was also continued. One powered orthosis to provide motion for a flail elbow was redesigned to simplify controllability and was delivered to VAPC for further clinical evaluation.

Powered Medical Manipulator

The objective of the powered medical manipulator development is to study the practicality of a manipulator mounted on a special worktable in meeting some of the needs of a quadriplegic or severely disabled person. The basic concept is described in the BPR 10-23 and 10-24 issues.

Clinical evaluation testing has been under way for approximately one year and is continuing. One patient at the Maryland Rehabilitation Center has used the equipment intermittently on a part-time basis over a 7-month period. This patient, a middle-aged male, is a quadriplegic of 8 years duration due to cervical spine trauma. He has a total neurological deficit below C-4 with absolutely no residual hand, wrist, elbow, or scapulo-humeral motion. He retains only about 50 percent of normal cervical spine motion and some weak scapulo-thoracic/elevation-

depression. His scapulo-thoracic motion is complicated by intermittent muscle spasticity.

The patient is able to operate an electric wheelchair with a joystick control which he grasps with his teeth and operates by moving his head. He spends most of his day in his wheelchair and prefers to work at a table with the manipulator attached to its top in preset alignment with various work objects. Independent of the manipulator, he has learned to turn pages, move small lightweight objects, and operate electronic keyboard equipment within a small work area, with a head stick. To operate the manipulator, he uses shoulder elevation to select the mode of motion desired, followed by head-stick control for proportional control to achieve placement. With the manipulator, he has learned how to load paper into the typewriter and position it for typing with his headstick. Other tasks performed with the manipulator include self-feeding and reading magazines.

After about 150 hours of manipulator use time by this subject, tests were discontinued when the patient was transferred from the Baltimore area. The manipulator was then returned to the Applied Physics Laboratory and new features were designed and implemented to permit an interface capability with spinal-cord-injury patients who have capabilities with a mouth stick. Some of the new features added to the manipulator include the following.

1. *New Control Mode Options.* These offer a choice of direct keyboard operation with the mouth stick for mode selection, or automatic sequence with stop on pulse command. The patient can select control option to suit his task at hand.

2. *Chin-Nudge Control.* A chin-nudge transducer was added to effect proportional control of the desired motion of the manipulator. The transducer is attached to the work table and may be swiveled in or out of contact with the chin by the patient's head motion. Good proportional control is achievable with this transducer.

3. *Telephone Option,* for patients who desire or need to use the telephone. All telephone components are unmodified and the system employs a standard hand-held receiver. A touch-tone module is suitably located on the work table to allow the patient to touch-tone "dial" or select keys with his mouth stick. The headset is swung to the patient's head with the manipulator when making or receiving a call. This motion also turns the phone on or off. The headset final position is predetermined and requires no precision for placement.

4. *A Two-Length Mouth Stick,* plus a suitable holder on the work table. The patient may retrieve or store the mouth stick in this holder as desired. The mouth stick is made in two pieces with a magnetic coupling inside an aluminum sleeve. Dependent upon how the mouth stick is removed from the holder, the patient may pick up the mouth stick in its longer length

(approximately 20 in.), or in a shorter length (approximately 15 in.). The longer length, with a rubber tip useful in turning pages, is generally used for reading. The shorter length is used to touch-tone "dial" the phone, to type on the typewriter, and for direct control of the manipulator keyboard.

5. *Optional Reading Tray*. The original work table had a semi-automatic page-turning device on the reading tray. Since the patient currently involved in clinical testing of the manipulator has good use of the mouth stick, this feature has been temporarily removed and replaced by a tray for holding books and magazines. The manipulator is used to bring the reading material to the tray, and the mouth stick is used for turning pages.

Powered Orthosis Development

In a continuation of the development of powered devices for upper-limb orthoses, the Johns Hopkins powered system was adapted to a cable harnessing arrangement to provide motion for a flail elbow. The location of the power components and the harnessing arrangement are shown in Figure 12. The system was adapted for constant-velocity bidirectional motion and is controlled by a finger switch. The system was delivered to the VAPC for clinical evaluation on a VA patient who has two flail elbows, but two good hands. Clinical tests are planned to be conducted by VAPC during the early part of 1976.

Powered Prosthesis Development

Clinical testing is continuing on the externally powered prosthetic systems previously developed under this program. Clinical tests have been conducted over the past 5 years on these systems: of the 15 experimental prostheses fitted to patients in this program, eight systems are still worn by patients. More than 41.5 man-yrs of test time has been accumulated on these systems.

Many design improvements have been made in powered prostheses models fabricated since the six experimental units were manufactured by the Pope Brace Company to APL drawings for VAPC. Some of the significant design changes over the earlier model include:

1. Simplifying the power unit electronics to one printed electronic card and locating the card adjacent to the battery pack in the forearm space;
2. Eliminating electronics in the elbow motor pack assembly to allow use of the same interface bolt arrangement as in the Hosmer internal-locking elbow;
3. Improving electronic circuits to minimize battery drain; and
4. Providing a lighter and smaller elbow unit.

The above changes have been incorporated on two above-elbow powered prostheses which now have accumulated 4.75 man-years of

FIGURE 12.—Powered othosis for flail elbows; finger switch controls motion.

clinical test experience. This later model of an above-elbow prosthesis is illustrated in Figure 13. Tests are continuing on these models.

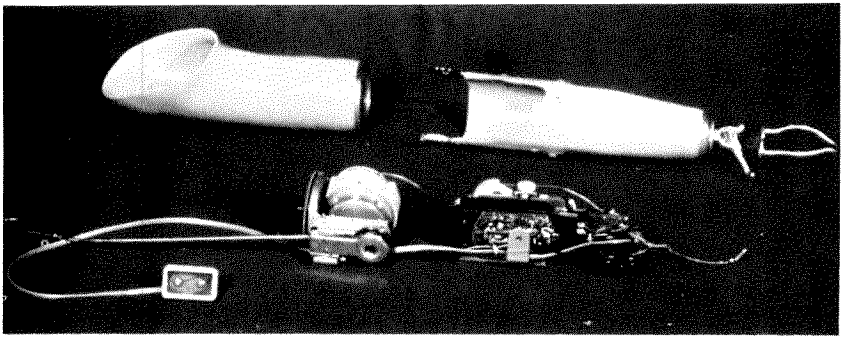

FIGURE 13.—Advanced above-elbow powered prosthesis—basic components.

Development of Refined Fitting Procedures for Lower-Limb Prosthesis—Case Studies of Applied Research in Orthotics and Prosthetics

University of Miami School of Medicine
Department of Othopaedics and Rehabilitation
P.O. Box 875, Biscayne Annex
Miami, Florida 33152
Augusto Sarmiento, M.D., Newton C. McCollough, III, M.D., and Loren Latta, P.E.

This project was designed as a research approach in the management of patients with lower limb loss and/or dysfunction who present difficult problems in prosthetic substitution and/or orthotic control. The specific aim of this project is to individualize solutions to difficult and unusual problems which do not lend themselves to the standard orthotic and prosthetic solution. The ultimate goal of the project is routine evaluation, analysis, and implementation of new treatment techniques along with thorough record keeping on each case. A bank of data on rare and unusual problems and possible solutions can be generated. With sufficient case material this bank of data could provide sufficient information so that unusual problems of a particular type may be categorized as to the special needs of the patient and a general specialized approach for treatment which has proven successful.

The special-problems Clinic Team in the past 6 months has reviewed 33 patients and included eight additional patients in the special problems program. The team has also continued to follow all 25 patients previously included in the program. Followup is nearly complete on five patients at this time. The 33 patients involved in the clinic today include 20 orthotic patients and 13 prosthetic patients.

Although our original plans projected approximately 25 new cases per year with the minimum followup of 1 year on each individual case post successful fitting, it appears at this time that the average patient will be followed for much more than 1 year. After inclusion in the program, each patient is analyzed carefully before any possible solution for his problem is attempted. In many cases the successful solution to the problem will not be devised until 6 months to a year after the patient has been included in the program. Therefore, with the minimum followup of 1 year post successful fitting, these patients will be followed for a minimum of 2 years. If we expand the program by 25 new cases per year continually, we will be treating approximately 50 patients at any given time. This heavier case load is more than the present staff can handle, and thus inclusion of new patients will probably be slower during the next year until more of the present patients can be placed in the followup and out of the initial problem-solving routine.

Development and Evaluation of Advanced Automotive Adaptive Equipment

Texas A&M University, College of Engineering
Bioengineering Program
College Station, Texas 77843
Make McDermott, Jr., Ph. D., and Lewis A. Leavitt, M.D.

Wheelchair Lift Evaluation

The first phase of testing, consisting of an engineering analysis and fit-and-function evaluation, was completed on the six wheelchair lifts purchased from Compass Industries, Helper Industries, Maxon Industries, Speedy Wagon Sales Corporation, Para Industries, and Ricon Corporation. A report titled "An Evaluation of Commercially Available Wheelchair Lift Devices," dated Nov. 20, 1975, was submitted to the VA detailing the results of these evaluations.

Also submitted at the same time was the report, "Interim Test and Evaluation of the Modified Casady Safety Van Lift," dated Nov. 20, 1975. An abbreviated evaluation had been performed in October and November on the modified Casady lift to determine if the modifications had overcome the negative aspects of the original model. The interim report was favorable.

Work has been started toward the second phase of testing: simulated life cycle testing. A new test fixture has been built, and the Maxon, Speedy Wagon, Para, and Ricon lifts are being installed on it. Through the use of a timing mechanism the lifts will be operated through their raise/lower cycles in sequence, to simulate actual use. Life expectancy and any premature failures will be determined.

Mr. Larry Freeman, president of Speedy Wagon Sales Corporation, expressed the desire to send at his expense a newer version of his lift to us for use in the life cycle testing. We accepted his offer and will use the old Speedy Wagon lift in the 1973 Chevrolet van received from Helper Industries, and will later put the Helper lift on the test fixture for life cycle testing.

Since the Compass Industries lift was considered not acceptable in present form, we do not intend to do further testing.

First phase testing is underway on the Braun, Collins, and Casady lifts. Future evaluation reports will be submitted as addenda to the original basic report mentioned above.

We made contact with Mr. Peter G. Brown, the Staff Manager of the ASTM Committee F-19 on Orthotics and External Prosthetics. This committee is approximately 1 year old, and has a subcommittee on Mobility Aids. Mr. Brown expressed considerable interest in the wheelchair lift project and requested that we stay in contact. Dr. Make McDermott is in

the process of becoming a member of ASTM and of this committee.

Preliminary Library research work was started on the wheelchair lift standard in the locating of other applicable standards and technical definitions.

Servo-Control System Test and Evaluation

The testing of the Harden-Creative Controls, Inc., servo-control system is complete, except for final run-out of the 2000 mile simulated urban/rural long-term use test. About 500 miles are yet to be traversed. Some of this mileage will be accumulated on over-the-road trips to TIRR in Houston. Failure mode analyses, human factors and safety evaluation, and all engineering evaluation is complete, and the report on Texas A&M's findings on this control system is in preparation.

The second Harden-CCI control system was received on January 6, 1976. This unit will be installed in one of the on-hand vehicles and the installation process videotaped as requested by VAPC.

Integrated Mobility System Test and Evaluation

The test plan for integrated systems test is in preparation at this time. The plan consists of the following:

1. Access/egress to/from vehicle,
2. Wheelchair access,
3. Transition to driver position,
4. Driver workplace: system controls, visibility, restraint, and escape (rescue),
5. Adaptive vehicle control evaluation: primary and secondary.

Each of the above will feature: a. system description, b. test schedule and sequence, c. safety and human factors inspection, d. failure modes analysis, and e. performance evaluation.

Sections 2, 4, and 5 of the test plans will be adapted from existing test plans for wheelchair lift evaluation and the adaptive-control-equipped vehicle 2000 mile test. This test plan work is in preparation for the vans from Scott, Southwest Research Institute, and Sevier Manufacturing that will be delivered for testing soon.

Control of an Artificial Upper Limb in Several Degrees of Freedom

Department of Electrical Engineering
Colorado State University
Fort Collins, Colorado 80523
Daniel Graupe, Ph. D.

During the second half of 1975 work has continued on both the

toe-controlled prosthesis and the myoelectrically controlled prosthesis.

The toe-controlled system has seen mainly minor modifications aimed at weight reduction through change in components, and at simplifying its interface with the myoelectrically controlled system. However, the main emphasis of the work was on the myoelectrically controlled prosthesis. Here, the complete controller realization on a double word-length Intellec 8 Mod 80 microprocessor system has been completed, including the interface with the patient. Hence, the complete limb function discrimination, via myoelectric signal identification, is now executed in real time on the above microprocessor system. This involves at present the discrimination between 4-bit functions, plus a "hold" mode from a single electrode location. Tests on an amputee have been started and are continuing, the subject being a Vietnam above-elbow amputee, injured in 1969, who had no previous myoelectric training. Also tests on discrimination of hand signals, using the above real-time system, have been successfully performed, indicating precise two-function discrimination from a single electrode location on the palm of the hand.

Modified Myoelectric System

A modified myoelectric discrimination system has also been designed and put on the microprocessor system, this design again being based on autoregressive (AR) time-series model identification. It differs from the original system in that the recognition algorithm is based on using a set of parallel AR models whose output-error variance is used for recognition rather than the directly identified parameter vector. The modified system eliminates the use of continuous identification, thus facilitating a considerable increase in speed of control. However, it is more sensitive to identification bias, and work on this aspect is to be pursued.

Future work is to be mainly devoted to improving system reliability and speed, and to reducing biaes on both the original myoelectric system design and its modified version.

Papers Presented

Several presentations of papers on the myoelectric system were made in conferences and symposia. These include invited papers at the IEEE Conference on Decision and Control, Houston, Tex., Dec. 1975 and at the 28th Conference on Engineering Medicine and Biology, New Orleans, La., Sept. 1975. Also, a paper on this subject was invited by the organizing committee of the International Federation on Automatic Control (IFAC) for its tri-annual Identification Conference to be held in Sept. 1976 in the USSR, and for the Joint Automatic Control 1976 Conference. Other related publications include a paper in the March 1975 issue of the IEEE Transactions on Man, Machine, and Cybernetics.

Acceleration of Bone Healing by Electrical Stimulation
Helen Hayes Hospital, Biomechanics Research Unit
Route 9W, West Haverstraw, N. Y. 10993
George Van B. Cochran, M.D.

This study was directed toward developing clinically effective techniques for stimulating healing of non-union of bone by means of electrical stimulation; the work was based on other studies which have demonstrated bone formation around a cathode in the medullary canal of bone. An animal model for non-union was developed and studied in the canine ulna. Although, partially because of technical difficulties, attempts to create bony union in this defect were unsuccessful in this study, valuable information was gained as a groundwork for future laboratory studies which should be continued until results justify clinical trials.

Conclusions

Conclusions drawn from the experience gained in this study provide valuable clues for extension of this experimental work in animals. As yet, information is inadequate to recommend initiation of a project in VA patients with non-union. The following points are considered significant results of this work:

1. The canine model developed under this contract represents a reliable and easily evaluated medium for tests of electrical stimulation related to healing of non-union of bone.
2. Electrode placement is an essential factor in obtaining bone formation. Our results suggest that cathodes may not be effective in stimulating bone unless placed virtually in direct apposition to existing bone, or within intact marrow. Electrodes placed within a fibrous tissue area of a non-union may be relatively ineffective in promoting healing.
3. Current density (as distinguished from total current flow in the system) is another factor in producing bone. Our results, in combination with reports of others, suggest that higher currents must be used for optimal bone stimulation when larger electrodes are used, with either continuous or pulsed current. Reports of an optimal current level of $20\mu A$ for continuous current are probably relevant only for a specific electrode size. Larger electrode areas require larger currents, to bring current densities up to an effective level.
4. Clinically, current densities and placement of cathodes must be carefully selected and controlled if stimulation of healing of established or potential non-unions is to be successful.
5. Passive impedance vs. frequency measurements may be of value as an index of bone formation in both laboratory and clinical studies, as well as ultimately in monitoring routine clinical treatment.

List of publications and presentations resulting from and crediting this research contract:

1. Cochran, G.V.B.: Acceleration of Bone Healing by Electrical Stimulation. Bull. Prosthetics Res., BPR 10-22: 291-294, Fall 1974.

2. Cochran, G.V.B.: Technical Note: A Method for Direct Recording of Electromechanical Data from Skeletal Bone in Living Animals. J. Biomech., 7(6):563-565, Nov. 1974.

3. Cochran, G.V.B., R.M. Derman, and S.I. Blum: An Experimental Model for Determination of Effects of Electrical Stimulation on Healing of Non-Uion in Canine Bone. Trans. 22nd Annual Orthop. Res. Soc., New Orleans, La. 1976 (Abs. #P142).

4. Cochran, G.V.B., R.M. Derman, and S.I. Blum: Techniques for Recording Electromechanical Events from Canine Bone during Walking. Proc. 27th ACEMB, Phila., Pa., p. 452, Oct. 1974.

This work currently is being continued in the Biomechanics Research Unit at Helen Hayes Hospital. An application for a new VA contract for this work, to be carried out in cooperation with Rensselaer Polytechnic Institute and Castle Point VA Hospital, has been made by the Principal Investigator.

Hemodynamic Evaluation of Postoperative and Preoperative Amputees
VA Hospital
Castle Point, New York 12511
Bok Y. Lee, M.D., F.A.C.S., Frieda S. Trainor, Ph. D., David Kavner, D. Eng., John L. Madden, M.D., F.A.C.S., and Emilio Ejercito, M.D.

One of the primary objectives of this program is the continuing use and evaluation of objective methods for assessing the vascular status and circulatory reserve of patients with peripheral vascular disease and potential risk of amputation. During the period covered in this report, the technique of Hemorheography for the detection of blood flow in the digits of patients with vascular disease was evaluated. The sensing probe of the Hemorheograph contains a tiny light source and a photosensitive cell which responds to the light reflected from the arterial blood in the peripheral vascular bed over which the sensor is placed. The amount of pulsating light registered is directly proportional to the amount of pulsating arterial blood. Since the light penetrates only a few millimeters of tissue, the probe responds to the pulsatile blood flow in the vessels supplying the skin. Ulceration and gangrene start from the skin, therefore effective revascularization with tissue perfusion can be assessed by this technique.

A series of 56 patients representing over 1,000 digits have been

studied. It has been observed that in 20 patients with gangrene there were 48 gangrenous toes. Thirty-one of these toes were seen on the right foot versus 17 gangrenous toes on the left foot.

The amplitude of the digital blood flow waveforms appears to relate to the status of the vasculature in the digit. In patients without peripheral vascular disease there are no significant ankle-digit systolic pressure gradients. However, in patients with peripheral arterial occlusive disease, the ankle-digit pressure gradient increases and a concomitant decrease in the high frequency components of the digital pulsatile blood flow waveform are observed. Following lumbar sympathectomy the ankle-digit pressure gradient is decreased or eliminated and marked improvement in the digital pulsatile blood waveforms are observed. Hemorheography appears to be a simple, practical, and noninvasive technique for assessing digital blood flow.

Maxillofacial Restorative Biomaterials and Techniques

Temple University School of Dentistry
Broad and Montgomery Ave., Philadelphia, Pa. 19122
James W. Schweiger, D.D.S., M.S., and John F. Lontz, Ph. D.

The research efforts during the past year have been directed toward comparing the characteristics of the principal polymers and elastomers currently used to fabricate and color maxillofacial prostheses. These include polysiloxane (RTV and HTV grades), plasticized polyvinyl chloride, and polyurethane. The results of the comparisons with respect to: a. discoloration, b. changes in stiffness due to cold and heat exposure, and c. changes in stiffness due to hygienic cleaning with soap and isopropanol have been reported in a paper presented at the twenty-third annual meeting of the American Society for Maxillofacial Prosthetics and for publication in the Journal of Prosthetic Dentistry. The results of the comparisons single out the HTV (heat cured) polysiloxane as the most durable of the three principal types of prosthetics materials.

Of particular merit, the HTV polysiloxane (available as Dow MDX 44514 and General Electric SE 4524 elastomer gums) exhibits tear-resistance. This quality, essential for durability, is coupled with the high strength-modulus (S/M) quotient. The S/M quotient is a combined measure of: a. an initial replication of the stress/strain characteristics of living tissue, and b. the terminal stress at which the material resists tearing and remains ductile rather than fracture-tearing. Table 3 presents a new set of data for SE 4524 silicone gum modified with medical silicone fluid as described in previous reports. The new maximum for the S/M quotient (6.2) places the heat-cured, peroxide-catalized polysiloxane as the biomaterial of choice for maxillofacial reconstructions.

Polymerization or curing studies on the 80/20 composition, indicated

TABLE 3

Formulation		Tensile constants			
SE - 4524 (parts)	Silicone fluid (parts)	Modulus M lb/sq in.	Strength S lb/sq in.	Elongation %	S/M quotient
100	0 (unmodified)	155	685	1616	4.4
90	10	138	665	440	4.8
80	20	48	298	1170	6.2

above, have demonstrated successful curing in gypsum molds at temperatures (90-110 C) safely below the hydration transition of the gypsum molds.

Two significant and practical results have evolved from this past year's research. Firstly, it has been shown that RTV polysiloxane formulations surpass the polyvinyl chloride (PVC) and polyurethane compositions on the merits of: a. replicating the tactile modulus of living tissue, and b. the ability to be heat-cured in gypsum molds, thus avoiding metal molds needed with PVC. Secondly, the SE 4524 gum stock from a competitive supplier (GE) is more generally available at cost about one-eighth (5 dollars versus 39 dollars) of the MDX (Dow) variety. Thus, polysiloxane is more economical compared to the other materials.

The biomaterials program is now directed toward standardization of coloration and formulation of improved adhesives. In addition, tissue inflammation and toxicity tests are planned to assure non-toxicity.

The research efforts at this Center are being disseminated through a series of papers describing the rehabilitation service accorded patients needing maxillofacial prosthetic reconstructions. These papers will be presented at the First International Symposium on Facial Prosthetics at Arnhem, The Netherlands, April 19-23, 1976. A report on this conference appears elsewhere in this issue of the Bulletin.

Permanently Attached Artificial Limbs
Southwest Research Institute
8500 Culebra Road
San Antonio, Texas 78284
C. William Hall, M.D.

For progress during this report period, see "Skeletal Extension Development: Criteria for Future Designs," appearing elsewhere in this issue of the Bulletin.

Mobility Aids for the Severely Handicapped
Mobility Engineering and Development, Inc.
78300 Paseo Del Rey
Playa Del Rey, California 90291
Charles M. Scott and Ronald E. Prior, Ph. D.

Mobility Engineering and Development (MED), Inc., has concentrated on two projects during this period: 1. a high performance van-compatible wheelchair, and 2. a joystick controlled chair-van (an automotive van controlled by the wheelchair joystick and several auxiliary switches push-actuated by residual upper-limb motion, or possibly voice controlled).

Van-Compatible Wheelchair

All mechanical components for the first pre-production version of the wheelchair have been completed except the trailing arms. These arms contain power drive trains and cannot be completely designed until electronic circuitry options are resolved. Road tests of a mockup of the wheelchair suggest that the use of a stepped or continuously variable transmission may allow both top speed and hill climbing specifications to be increased. Such transmissions, if feasible, would be incorporated into the trailing arm drive assemblies.

The design and selection of suitable servo amplifiers and motors is continuing. Construction of a hydraulic engine dynamometer has commenced; this will facilitate optimization of system parameters such as supply voltage, motor characteristics, pulse drive frequency, and transistor selection. Servo amplifier designs compatible with 20 percent grade and 10 mph performance capabilities with and without transmissions are being evaluated.

Joystick Controlled Chair-Van

Joystick control of the chair-van will enable severely handicapped drivers to control the automotive van by moving a small joystick and by actuating several additional switches. High reliability is mandatory if potentially disatrous failures are to be avoided. For this reason MED, Inc., is investigating multiple-redundancy systems with failsafe microprocessor failure-detection, and microcomputer reconfiguration of system operation modes. Work is in the preliminary design phase. A microcomputing system has been selected, and work has just begun on a bench mockup composed of key system components and the microcomputer. From the mockup the optimal system configuration will be selected.

Spinal-Cord-Injury Studies: Paralysis, Spasticity, and Pain
Veterans Administration Hospital
1201 N.W. 16th Street
Miami, Florida 33125
Jorge D. Jacobi, M.D.

With the change of key personnel and the associated change in their research interests, the Prosthetics Research Project was terminated at VAH Miami, Spinal-Cord-Injury Service.

The project studies on paralysis, pain, and spasticity began under Dr. Ross M. Davis and were reported on in the Bulletin of Prosthetics Research (BPR 10-20, 346-347; BPR 10-21, 146-147; BPR 10-22, 298-309; and BPR 10-23, 328-329).

The results of the project made significant clinical contributions in the fields of transcutaneous nerve stimulation for the treatment of pain and spasticity in the spinal cord and central nervous system injured patient, via transcutaneous and implanted electrical stimulators.

Publications

The project resulted in the following additional publications:

1. Davis, R. and J.W. Gesink: Evaluation of Electrical Stimulation as a Treatment for the Reduction of Spasticity. Bull. Prosthetics Res., BPR 10-22: 302-309, Fall 1974.

2. Davis, R.: Pain and Suffering Following Spinal Cord Injury. Clin. Othop. and Rel. Res., 112:76-80, Oct. 1975.

3. Davis, R.: Spasticity Following Spinal Cord Injury, Clin. Orthop. and Rel. Res., 112(66-75, Oct. 1975.

4. Davis, R. and M. Dimanceseu: Technique for Implanting Cerebellar Stimulator. Videotape, Congress of Neurological Surgeons, Vancouver, Canada, 1974.

5. Davis, R. and R. Lentini: Transcutaneous Nerve Stimulation for Treatment of Pain in Patients with Spinal Cord Injury. Surg. Neurol., 4:100, 1975.

6. Davis, R. and R. Lentini: Transcutaneous Nerve Stimulation for Treatment of Pain in Spinal Cord Injured Patients. Bull. Prosthetics Res., BPR 10-22: 298-301, Fall 1974.

7. Lentini, R., R. Davis, and J. Goldstein: Inexpensive Electrodes for Transcutaneous Stimulation. Neurosur., 41:262-264, Aug. 1974.

8. Rosen, J.M., D. Rowell, and J. Gesink: Suppression of Intention Tremor by Application of Viscous Damping. Proc. of 4th Annual New England Bioengineering Conf. Yale Univ. Press, 391-394, 1976.

Clinical Gait Analyzer
The Professional Staff Association of the Rancho Los Amigos Hospital, Inc.
7413 Golondrinas Street
Downey, California 90242
Jacquelin Perry, M.D.

The first prototype system was sent to Mary Pat Murray, Ph. D., of the Kinesiology Research Department of the Veterans Administration Center, Wood, Wisconsin, for clinical tests. The results of these clinical tests clearly indicated the need for design modifications in the system. The recommended modifications fell into three categories: 1. start/stop control of the recorder. 2. system reliability, and 3. ease of operation of the system.

The following modifications were made in the design of the system. A light-sensing "start/stop controller" was designed to automatically initiate and terminate the run when the patient passed special "triggering lights" at the beginning and end of the walkway. The error detection circuitry was redesigned, providing a simpler yet more reliable circuit. The Record light circuitry was changed so that the Record light would stay on during a run. The voltage regulator in the recorder was redesigned.

Two complete systems are being fabricated, incorporating the design changes described above. These are hand-wired units, and special care is being taken in their construction to improve their reliability over that of the first prototype. These units are nearing completion and will be ready for preliminary testing in January 1976.

In Vivo Loading of Knee Replacement
Biomechanics Laboratory
Bingham Engineering Building
Case Western Reserve University
Cleveland, Ohio 44106
Albert H. Burstein, Ph. D., and Victor H. Frankel, M.D.

The Biomechanics Laboratory at Case Western Reserve University is in the process of supplying the Veterans Administration Hospital in Cleveland, Ohio, with six bicondylar sets of total knee joints capable of detecting and telemetering the in vivo loads in the knee.

The welding problems with the titanium alloy, mentioned in the last progress report, proved more difficult than anticipated but now appear to have been solved. The implantation and clinical testing anticipated for January 1976 was further delayed because of these problems.

Research and Development Project on Advanced Orthotic Devices for Adult Paraplegics
Prast Research Associates, Inc.
1094 Stony Point Road
Grand Island, New York 14272
Martin T. Prast

Lawrence Carlson, Ph. D.
University of Colorado
Boulder, Colorado 80302

Prast Research Associates has completed all design modifications on PACO III and has started production on three new units for further testing by other paraplegics in the VA system.

This new system has adjustable capabilities so that the device can be adjusted to each patient's needs rather than building a custom-fit device for each patient.

Dr. Lawrence Carlson of the University of Colorado at Boulder has joined PRA as a co-principal investigator and is now redesigning the knee lock mechanisms to make these automatic.

Further testing by other paraplegic users will begin, with the next 6 months spent in determining any shortcomings of the new PACO III design.

SENSORY AIDS

Edited by

Howard Freiberger, A.M.
Electronics Engineer

Research Center for Prosthetics
Veterans Administration
252 Seventh Avenue
New York, N.Y. 10001

Laser Cane Blind Mobility Aid
Bionic Instuments, Inc.
221 Rock Hill Road
Bala Cynwyd, Pennsylvania 19004
J. Malvern Benjamin, Jr., Nazir A. Ali, and J. Ridgeley Bolgiano

A final report on this project is in progress and upon completion will appear in a future issue of the Bulletin.