SUPPLEMENTAL SENSORY FEEDBACK FOR THE VA/NU MYOELECTRIC HAND BACKGROUND AND PRELIMINARY DESIGNS [a] [b]

Ronald E. Prior, Ph. D.
Assistant Research Engineer

John Lyman, Ph. D.
Professor, Engineering Systems Department

Philip A. Case

Biotechnology Laboratory
3116 Engineering 1
School of Engineering and Applied Science
University of California
Los Angeles, California 90024

Charles M. Scott, B.S.M.E.
Associate Director, Instructor, and Research Engineer

Prosthetics/Orthotics Program
Rehabilitation Department of Surgery/Orthopedics
School of Medicine
University of California
Los Angeles, California 90024

INTRODUCTION

Statement of the Problem

Control signals with considerable information content must be originated by the patient in order to execute the complex motions desired of an upper limb prothesis or orthosis (1). As the level of dysfunction becomes more proximal, the complexity of the amputee's control task increases. Other factors, including the quantity and quality of sensory

[a] Based on work performed under VA Contract V101(134) P-299 and V101(134) P-330.

[b] For additional information on this subject, see BPR 10-24, Fall 1975, pp 3-37 and the Proceedings of the San Diego Biomedical Symposium, February 3-5, 1976, San Diego, Calif., No. 15, pp 9-103, Academic Press, Inc.

feedback from the affected limb, also greatly influence the control task complexity. For the arm amputee, proprioceptive, kinesthetic, and touch feedback are severely degraded, and thermal feedback is nonexistent. It follows that restoration of some of this somatic sensory feedback present in the normal arm can increase the functional regain of the patient. Our research is investigating how best to accomplish the necessary sensory restoration using surface electrical stimulation of the skin.

Supplying Supplemental Sensory Feedback to the Patient

Supplemental sensory feedback (SSF) refers to information about the state of a prosthesis which is displayed to the amputee by means of special sensory feedback subsystems not present in conventional prostheses. The intent of SSF is to restore some of the sensory feedback present in the normal limb and thereby increase function.

The addition of SSF to an artificial limb does not guarantee an increase in performance as at least two conditions must be met before the SSF will be useful:

1. *The ability to control the prosthesis must be limited by the amputee's lack of knowledge about the state of his prosthesis — not by his inability to generate accurate control motions.* Whether or not a person is grasping with a 2-lb or a 3-lb grasp is of secondary importance if he cannot adjust his grasp to the desired force level. A prosthesis that can be controlled accurately, even though it offers only unaided visual and auditory feedback, is of greater use to the amputee than a prosthesis presenting him with considerably greater sensory feedback, but which cannot be precisely controlled.

2. *The SSF must provide new information to the amputee.* This information can duplicate visual information which may not always be available to him, and still be useful; but duplication of information which is always available to the amputee (e.g., SSF which indicates the forces in the Bowden cable of a conventional AE or BE cable-operated prosthesis) cannot be expected to provide large improvements in function.

Figure 1 ranks the amount of sensory feedback loss by type of upper-limb prothesis. The order indicated for the BE amputee wearing a myoelectric hand and the AE amputee wearing a conventional cable may be reversed, but the following principle holds: the more severe the sensory feedback loss, the greater the improvement that can be expected from adding even very simple SSF systems to the prosthesis, provided that performance is not being limited by the patient's ability to generate accurate control motions.

Supplemental sensory feedback systems usually contain electronic transducers (strain gages, potentiometers, etc.) installed at key points in the artificial limb. In addition, a signal-conditioning and display-driving electronics package, and an information display interfaced to the amputee, are required. Any type of visual, auditory and/or tactual displays can be used, but both visual and auditory displays tend to be conspicuous, drawing further attention to an already self-conscious individual. A better approach is to use some sort of silent and unobtrusive tactual display, preferably contained within the prosthesis.

Drawbacks, however, exist. Tactual displays must be properly designed to be effective. If electrocutaneous stimulation is employed, pain and skin irritation can result from improper design. Also, the rate of information transfer possible with a tactual display is typically orders of magnitude lower than with either a visual or auditory display.

These drawbacks are not insurmountable, and solutions appear to exist using available technology. For example, Saunders (2), Collins, and Madey (3, 4) have largely resolved the problem of painful stimuli. The problem of low information transfer rates still persists, though rates adequate for artificial limb applications have been achieved (2), (3), (5). (By comparison with visual or speech sensory aids, useful feedback concerning the state of a prosthesis requires considerably lower information transfer rates.)

Determination of unknowns, including the optimum amount of feed-

MODERATE	BE	wearing a conventional cable
	BE	wearing a myoelectric hand
	AE	wearing a conventional cable
	AE	and higher level amputee wearing an externally energized elbow and cable operated terminal device
	AE	and higher level amputee wearing an externally energized hand and elbow
SEVERE		with no cable feedback

FIGURE 1.—Sensory feedback loss ranked by type of arm prosthesis.

back information, the most crucial parameters, and the most efficient coding methods (e.g., pulse width and/or pulse repetition rates) is a major goal of the authors' research.

Several researchers have demonstrated that supplemental sensory feedback applied by means of a skin-mounted tactual display can be useful to the amputee (6–18) and to the neuromuscularly handicapped (4). Other groups are interested in surgical approaches to providing supplemental sensory feedback (18-20). However, surgical procedures can produce complications, including patient aversion to surgery, and possible physiological damage which may result in decreased, rather than increased, function for the patient (19). Supplemental sensory feedback systems for artificial limbs, then, might better rely upon surface stimulation rather than surgical implants until the latter can be shown to offer clear advantages. For this reason, our research has been limited to SSF systems using surface electrocutaneous stimulation, with a goal of developing practical systems which may be commercially produced.

Undesired Interaction between Myoelectric Control and Electrocutaneous Feedback

The simultaneous use of myoelectric control and electrocutaneous sensory feedback results in undesired interaction. Usually, when stimulator pulses occur the myoelectric amplifier is saturated, severely degrading the amputee's ability to control the prosthesis; sometimes control is completely lost. This problem has been investigated to some extent by other researchers. Kaplan (10) and Rohland (14-15) employed separate electrode sites for control and for stimulation, and various filtering schemes, as a solution to the interaction problem. Scott (16) describes the use of time-sharing and gain-control principles to enable a myoelectric control unit and a sensory feedback stimulator to function from a common set of electrodes. Mason (private communication) has investigated modifications of the VA/NU hand myoelectric signal (MES) amplifier circuits to achieve: 1. rapid recovery from input overload transients from the stimulator, and 2. filtering of stimulator frequency components.

Research at UCLA has resulted in a different solution to the interaction problem. During the summer of 1974, apparatus was assembled to investigate the consequences of floating and common ground connections for the MES amplifier and the stimulator (Figure 2). Preliminary results have indicated that interaction can be kept low enough for proper operation using surface stainless steel electrodes and the unmodified electronics package normally supplied with the standard VA/NU myoelectric hand (Fidelity Electronics, Ltd.)—only if separate myoelectric amplifier and stimulator grounds are maintained. The SSF systems

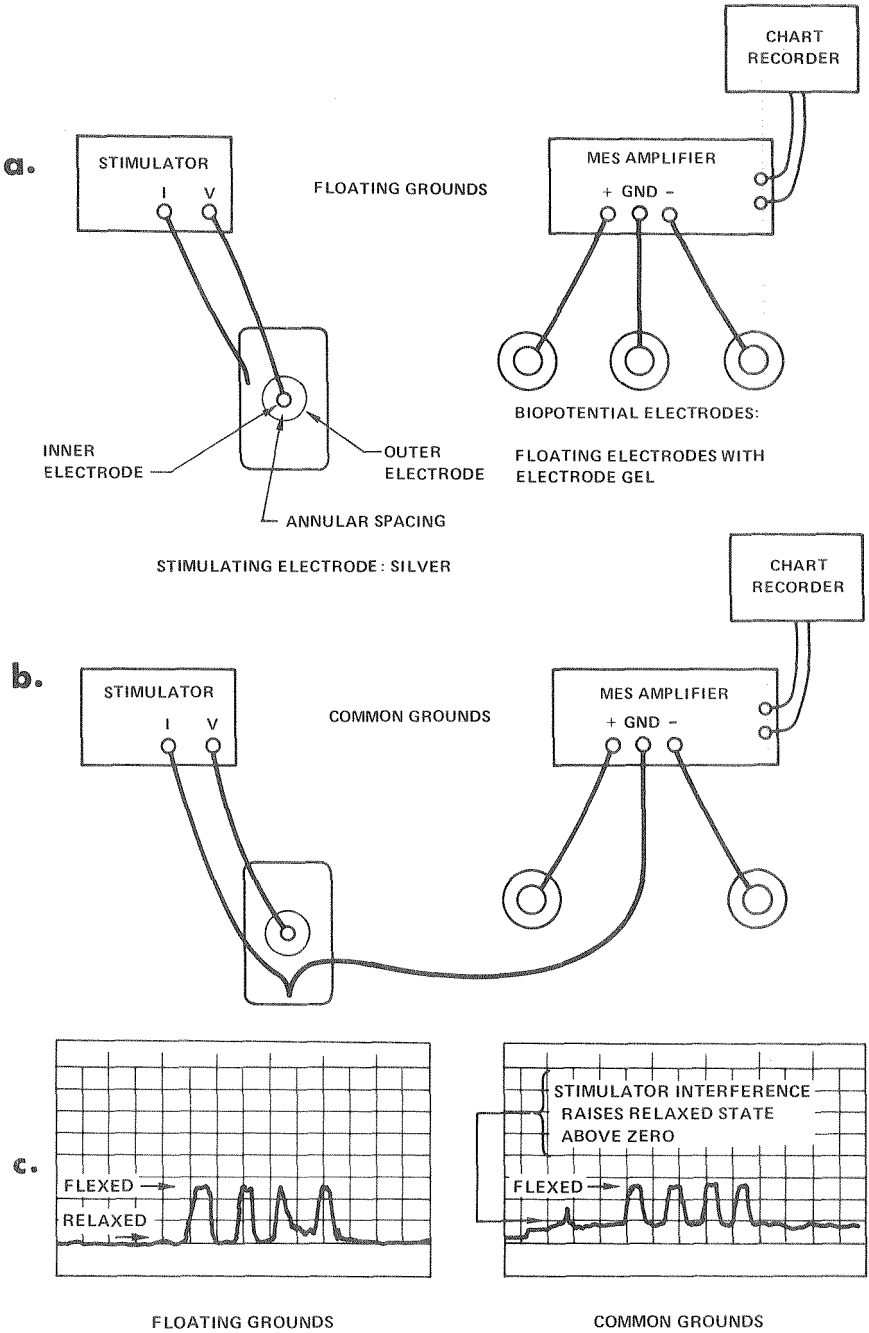

FIGURE 2.—Apparatus used to investigate the interaction between myoelectric control and electrocutaneous feedback. (a) block diagram of the apparatus with floating grounds; (b) block diagram of the apparatus with common grounds; and (c) typical data.

described later are based on these preliminary results.

Performance of VA/NU Myoelectric Hand without Supplemental Feedback

Figure 3 shows photographs and a block diagram of the VA/NU myoelectrically controlled hand. Before the UCLA Biotechnology Laboratory could properly design supplemental sensory feedback systems for this prosthesis, more data concerning subjects' ability to use the hand were needed. Two experimental testing sessions were therefore conducted. The results of these two tests, (Fig. 4) show that the subject was able to duplicate grasp within ±2 lb without any supplemental sensory feedback. (Scores of no better than ±4 lb had been expected.) The score for block identification of 62.5 percent correct was also somewhat above the 30-to-50 percent correct range that had been anticipated. In neither case was the subject fully trained in the testing tasks. In part, the high scores can be attributed to an extremely adept hand user. The subject felt that his ability to determine grasp force and block thickness was derived almost entirely from listening to the sound of the motor, and to a lesser extent from vibrations felt on his stump. He stated that he used changes in the sound of the motor to determine grasp force, mental integration of the motor running time from the full-open position to determine block thickness, and short-term memory to maintain references between motor movements. Feedback derived in this manner may be only of limited use as it requires the full concentration of an exceptional and sophisticated user to integrate vague cues into useful information.

Another important finding emerged from the second testing session. The subject's ability to duplicate the reference grasp was clearly limited by his inability to accurately achieve light grasps, not by his lack of knowledge about how tightly he was grasping. This factor did not appear in the first testing session where the subject was wearing a myoelectric prosthesis that he had been using for the previous two years. This used hand was limited in three respects:

1. Its maximum grasp force was only about 7 lb rather than the normal 15-or-more;
2. Its speed was slower than normal; and
3. The breakaway continually activated at about 7 lb. (When functioning properly, the breakaway is a safety grasp-relief feature which causes the index and middle fingers to pivot away from the thumb whenever grasp force exceeds 50 lb.) It did, however, allow the subject to accurately achieve grasps over the 0-to-5 lb range that was tested.

For the second testing session, the subject wore a new myoelectric hand he had been issued the previous week. With this new hand, the subject could achieve a grasp force of slightly over 16 lb and the breakaway operated normally. The speed of operation was still slightly slow. The control problem emerged during attempts to generate grasp forces

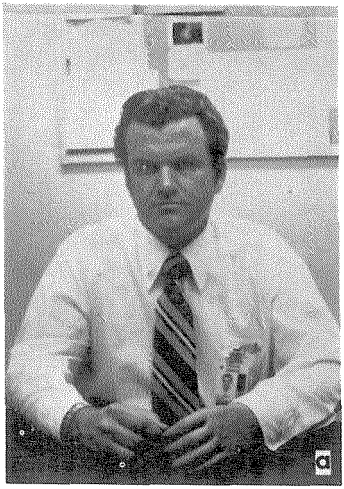

FIGURE 3. — The VA/NU myoelectric hand: a. The prosthesis on the subject; b. The subject preparing to don the prosthesis; and c. Block diagram of the prosthesis.

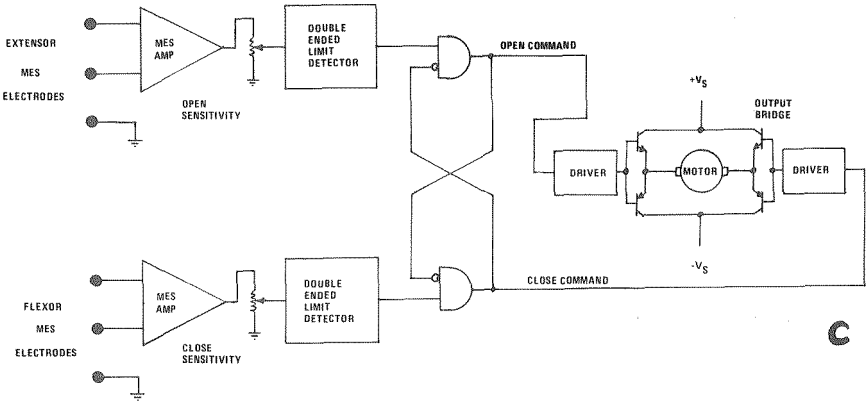

Block Diagram of the Prosthesis.

a) PINCH DUPLICATION

REFERENCE GRASP (in pounds)	DUPLICATED GRASP (In Pounds)		
		VA-NU MYOELECTRIC HAND	
	NORMAL RIGHT HAND (3 Trials	USED HAND (3 Trials) (7 pounds maximum grasp)	NEW HAND (4 Trials)
1 Range	(1.25–1.25)	(0 – 2)	(1.5 – 3.75)
1 Mean	1.25	1.00	2.93
3 Range	(3 – 3.25)	(3 – 3.5)	(2 – 6.5)
3 Mean	3.167	3.167	4.25
5 Range	(5 – 6)	(4.5 – 5)	(5 – 6)
5 Mean	5.33	4.83	5.68
10 Range	(9 – 11.5)	———	(8.5 – 11.25)
10 Mean	9.917		9.43
15 Range	(12 – 16)	———	(13.5 – 17)
15 Mean	13.67		15.56

b) BLOCK IDENTIFICATION

TEST CONDITION	% CORRECT RESPONSE
Normal right hand (10 trials of each block)	92.5
Old VA–NU myoelectric hand (10 trials of each block)	42.5
New VA–NU myoelectric hand (10 trials of each block)	62.5
Expected chance score	25.0

FIGURE 4.—Data for the subject (shown in Figure 3) performing (a) grasp force duplication and (b) block identification tasks.

between 0 and 4 lb. Grasp duplication scores (Fig. 4a) were essentially the same with and without visual feedback. The slightest amount of myoelectric signal generated by the subject would tend to cause grasp force to jump from 0 to over 3 lb. Occasionally, grasp forces between 0 and 3 lb could be achieved, but duplication was sporadic, even when the subject was looking at the pinch meter.

Most amputees are apparently unable to achieve light grasps using the VA/NU myoelectric hand. This control limitation is important and should be eliminated by redesigning the hand electronics package. Failure to do so will limit the effectiveness of add-on SSF systems.

PRELIMINARY DESIGN OF SSF SYSTEMS FOR THE VA/NU MYOELECTRIC HAND

In July 1975, system development began on a myoelectrically controlled hand with electrocutaneous sensory feedback of grasp force and hand opening for the BE amputee. The Veterans Administration Prosthetics Center provided a special myoelectric hand, complete with strain gages to measure grasp force and a potentiometer to measure hand opening (Fig. 5). Originally it was planned to incorporate two stimulation electrodes into the prosthesis, one to be used to indicate grasp force and the other hand opening. Both electrodes were to use pulse width or rate modulation, or a combination thereof. However, the results of subject testing (Fig. 4) indicated that the choice of codes should be more carefully considered before finalizing SSF parameters.

Just after the tests to determine the performance of the VA/NU hand were conducted, laboratory apparatus facilitating the investigation of several methods of coding electrocutaneous stimuli was completed. Test results with this apparatus suggested that spatial codes using several electrodes should also be considered (21). This work is continuing and, following the determination of optimum codes, the designs of clinically practical systems will be finalized. In the interim, development of necessary electronic subsystems, as well as a two-electrode SSF system, is underway. A set of system requirements has been formulated. The preliminary designs of three SSF systems have been completed.

System Requirements

The following system requirements should be met by any myoelectric hand SSF BE prosthesis in order to be clinically practical.

1. *The SSF system should be completely contained within the prosthesis, and must not degrade cosmetic appearance.* The only exception would be the placement of stimulation electrodes on the upper arm if, and only if, the use of a large number of electrodes can promise a dramatic increase in function for the amputee. Most amputees who prefer a myoelectric hand do so because it is more cosmetic and is easier to don and doff than a conventional cable-operated prosthesis. Thus any SSF system which degrades cosmesis or is not completely contained within the prosthesis should be avoided. Since containment of the SSF system within the forearm and hand is important, miniaturization of electronic circuitry is

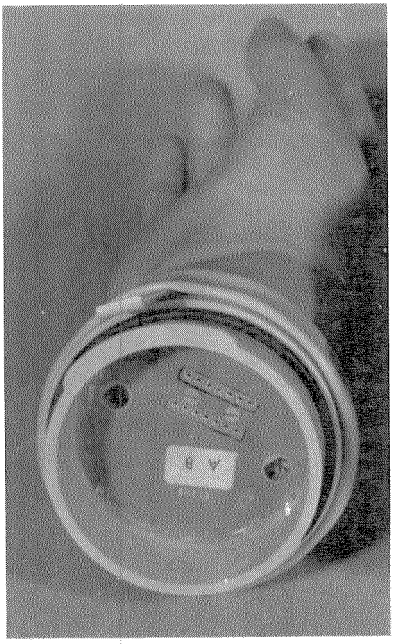

FIGURE 5. — Special myoelectric hand with mounted strain gages and feedback potentiometer supplied by the Veterans Administration Prosthetics Center (VAPC) Advanced Systems Laboratory. The connector bulkhead is shown. The remainder of the SSF system plugs into the dual inline package (DIP) socket.

required. If simple circuit designs using relatively few components prove adequate, conventional printed circuit board construction techniques will suffice. If this is not the case, custom hybrid circuits will be required, and possibly custom monolithic integrated circuits.

2. *The space available for the amputee's stump must not be reduced by more than 2 in.* A common complaint by prosthetists is that only those BE amputees with relatively short stumps can use the VA/NU hand. Approximately 8 in are required from the distal end of the prosthesis to the electrode connector bulkhead. Increases in this depth should therefore not exceed 2 in after the SSF system is added, or few amputees will be able to wear the prosthesis. Complete containment of the electronic components in the hand is required if mid-length BE amputees are to wear the prosthesis.

3. *The stimulator(s) must not interfere with the myoelectric control system.* The approach being pursued to achieve this goal is isolation of myoelectric amplifier and stimulator grounds. Three methods of isolating the grounds are under investigation:

a. Transformer-coupling of the stimulator output pulse to the stimulation electrode;
b. Use of a low-voltage (12V to 12V) dc-to-dc converter to power the SSF circuitry; or
c. A separate SSF battery pack.

4. *The operating time per battery charge must not be substantially reduced by the addition of the SSF system.* An estimate is that the total SSF system should consume no more than 10 mA at 12V continuous (25 mA during movements) if powered from the 12V, 225 mAh battery supplied with the hand, or no more than 36 mW if powered from a separate SSF battery pack.

5. *The SSF system must function properly throughout a typical battery discharge cycle.* This requires that all stimulation parameters be insensitive to normal battery voltage changes. Critical circuits must therefore possess good supply voltage rejection, or a voltage regulator must be incorporated into the design.

6. *Proper operation must be maintained for all anticipated temperature conditions.* The system should operate at least from 50 deg F to 100 deg F, and from 30 deg F to 120 deg F if possible. Temperature sensitivity of the stimulation parameters as measured at the electrodes should be 10 percent or less over the minimum temperature range.

7. *The weight of the SSF system should not exceed 8 oz, and 4 oz or less is preferred.*

8. *The cost of the SSF system to the amputee should not exceed $500.00, and $100.00 would be a more desirable target.*

9. *Codes chosen for the SSF system must require no more than a minimal conscious effort by the amputee to decode the sensory feedback information.* Code in this instance refers to the relationship between variations in a parameter of the prosthesis (e.g., grasp force), and variations in the stimulation that is applied to the amputee (e.g., pulse rate changes). Also, how the amputee perceives changes in the stimulation is part of the code (e.g., "the taps are faster, therefore I know that the hand is more widely opened").

Design of Three SSF Systems for the VA/NU Myoelectric Hand

The preliminary design of three SSF systems for use with the VA/NU myoelectric hand has been completed. The systems range from the simple to the complex, with expected performance (function) and cost to the patient also increasing with system complexity.

Single-Electrode Hand Opening SSF System.

The test results shown in Figure 4 suggest that useful improvements in the ability of a subject to duplicate grasp force as well as to sense hand opening may require at least two electrodes—one to display grasp force

and the other to display hand opening. (Coding both grasp force and hand opening with the same electrode appears to be inadequate.)

Clearly the difference between the abilities of the normal anatomic hand and a prosthetic hand to identify blocks is greater than the difference in the abilities to duplicate grasp forces. Thus one approach is to assume that hand opening SSF is more useful to the subject than SSF of grasp force. The system shown in Figure 6 (block diagram) is based upon this assumption, and represents what appears to be the simplest useful SSF system. Hand opening information only would be supplied to the subject by varying the pulse rate (PR) and/or pulse width (PW) of the stimulator. The electrode current would be set to a comfortable level by means of a potentiometer accessible to the subject.

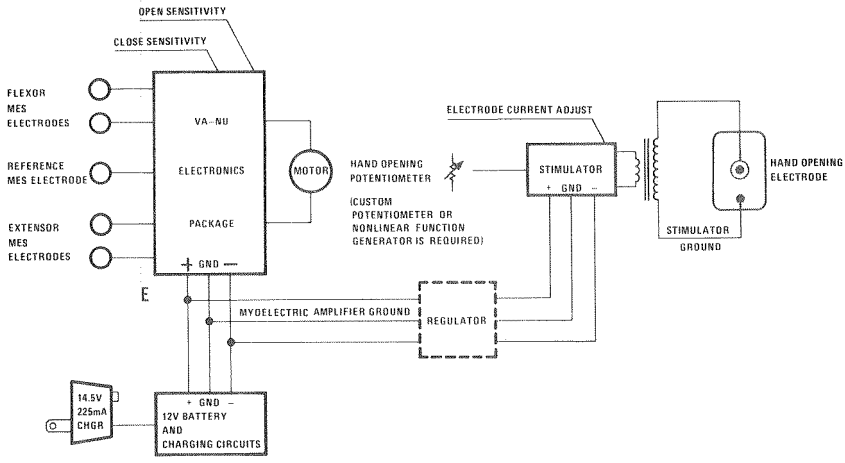

FIGURE 6.—Block diagram of the single-electrode hand opening SSF system.

The exclusion of grasp force from the SSF system saves considerable cost, as expensive strain gages and signal conditioning circuitry are no longer required. The elimination of the strain gage signal conditioner also reduces the number of component parts to the point where complete containment within the hand, using a conventional single-sided printed circuit board, appears possible (Fig. 7). If this proves to be the case, no reduction in the length of forearm amputation capable of being fitted would occur.

Isolation of the stimulator output by a voltage step-up transformer would also eliminate the need for a space-consuming high voltage dc-to-dc converter. Transformers measuring 0.6 in x 0.7 in x 0.72 in (0.30 in^3) appear adequate for this application. The total current drain of such an SSF system has been estimated to be less than 2 mA from the 12V, 225

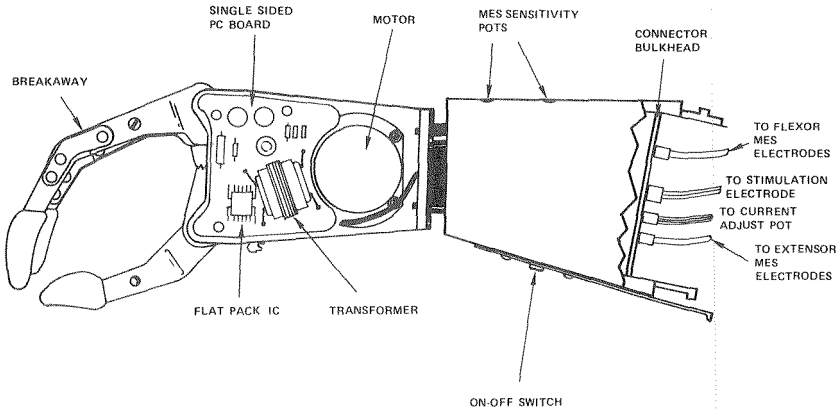

FIGURE 7.—Single-electrode hand opening SSF system.

mAh battery. Further, circuit insensitivity to battery voltage variations may be sufficient to allow the use of a simple zener diode for a voltage regulator if one is needed at all. The weight of this type of SSF system would be well under 8 oz, and the cost should be reasonable. Amputee acceptance of such a system should be high as it would meet all nine of the previously discussed system requirements.

Two-Electrode Grasp Force and Hand Opening SSF System.

A two-electrode SSF system was the first one considered, and is probably the most obvious way of supplying both grasp force and hand opening information. In this system, now nearing completion, two concentric silver electrodes will press against the subject's forearm (Fig. 8). Grasp force information will be supplied to the subject by varying the pulse rate of Stimulator No. 1 from 1 pps to 100 pps; hand opening information in a similar manner using Stimulator No. 2.

Isolation of stimulator and myoelectric amplifier grounds, as well as the elimination of a high voltage power supply, will be achieved by using voltage step-up transformers.

The requirements for the strain gage signal conditioner deserve further discussion. Prior (22) has shown that the $\Delta f/f$ for electrocutaneous pulse repetition rate discrimination can be as low as .0325 at 10 pulses per second (pps). Reswick, et al. (18), obtained a value of about 0.1 at 70 pps, somewhat lower than the value Prior obtained of .195 at 50 pps. These data suggest that tl : total jitter or short term (10 s) drift of the stimulator PR (pulse rate) should be less than 3 percent in order that relative discrimination of pulse rates not be degraded. In contrast, on an absolute basis, no more than 4 or 5 pulse repetition rates could probably be recognized by the subject. Thus long term drift (day to day) might be

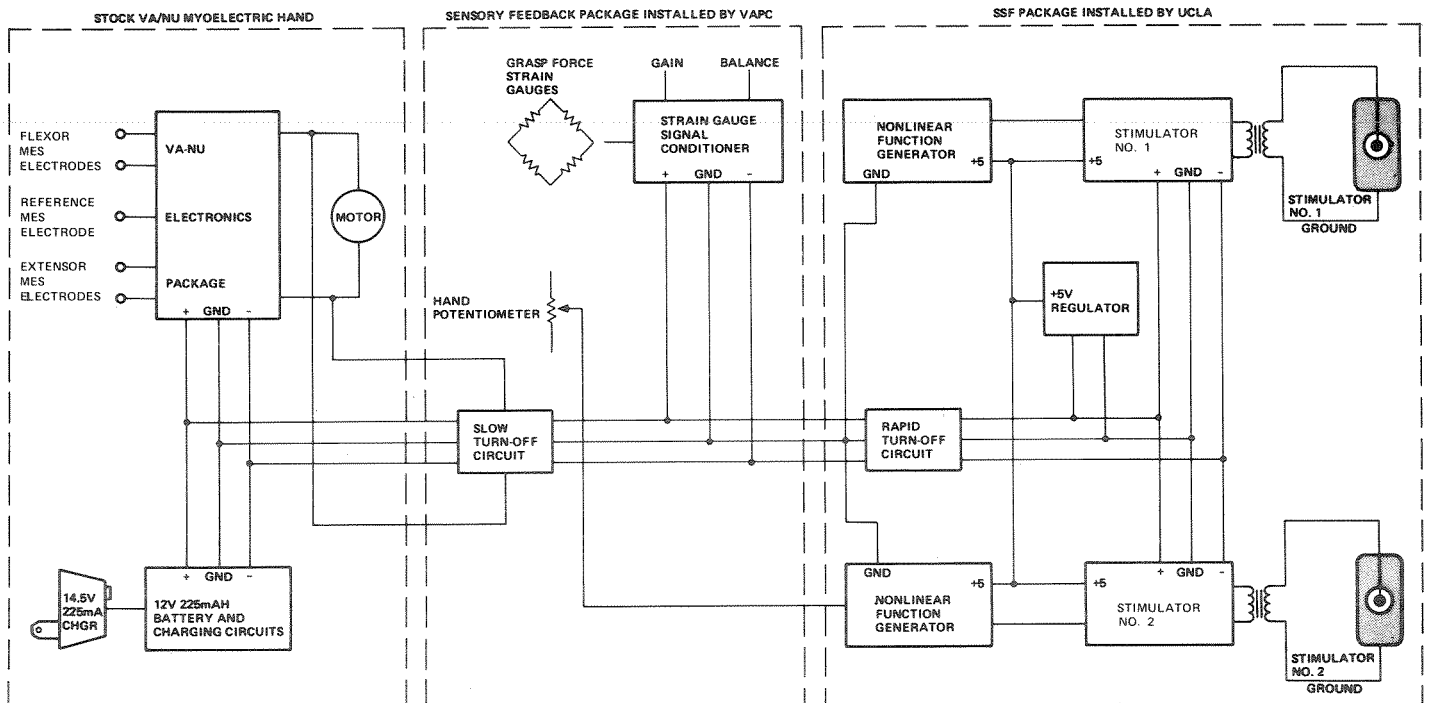

FIGURE 8.—Block Diagram of the two-electrode grasp force and hand opening SSF system.

as much as 10-to-15 percent without degrading performance. A reasonable goal would be a 10 percent long term PR drift over a minimum 50-to-100 deg F operating range.

Most of the long term drift in pulse rate appearing at the grasp force electrode would be due to changes in the output of the strain gage bridge and its signal conditioner with time and temperature. Less than 1 percent of the PR drift and jitter would be expected to occur in Stimulator No. 1 itself, if it were properly designed. Variations in the bridge excitation level would not affect the balanced strain gage bridge (grasp force of zero), but would affect the bridge output when maximal grasp forces were being applied. Therefore bridge excitation levels should be well regulated. Proper mounting and selection of strain gages could reduce PR variations arising from bridge thermal errors to below 1 or 2 percent over the 50-to-100 deg F minimum operating range. This implies that the strain gage signal conditioner long term drift with time and temperature should cause no more than a 7 percent variation to appear at the electrode, that is, about 3 percent less than the total acceptable long term drift value of 10 percent. Short term drift and jitter, due primarily to rapid supply voltage variations and noise generated in the strain gage signal conditioner, should be minimized so that no more than a 3 percent PR error occurs over a 10 s period.

Three approaches for realization of the strain gage signal conditioner are being investigated:

1. A relatively inexpensive d.c. amplifier circuit that consumes about 20 mA but consumes power only during motor movements (intermittent SSF),
2. A more expensive low-drift d.c. amplifier circuit that continuously consumes about 2 mA; or
3. A relatively complex chopper-stabilized circuit which uses pulsed excitation of the strain gage bridge, but which would consume less than 2 mA.

The best design has not yet been determined, nor have the effects of turning off the SSF between motor movements been fully investigated. In order to obtain an early indication of how useful SSF will be to the VA/NU hand user, approach No. 1 has been chosen for the first SSF system prototype. There were two reasons for this choice: (i) The VAPC had already developed such a strain gage signal conditioner (though its drift characteristics have not been established), and (ii) The risk of skin irritation and pain is substantially reduced when intermittent SSF is used. The strain gages and their signal conditioner, the hand potentiometer, and a slow-turn-off circuit, installed by the VAPC, are completely contained within the hand. Analog signals proportional to grasp force and hand opening, as well as regulated supply and motor voltages, have been brought to a dual inline package socket mounted on the

connector bulkhead (Fig. 5). The remaining portions of the SSF package including two nonlinear function-generator circuits, two stimulators, a 5.00 V voltage regulator, and a rapid turn-off circuit, will be constructed by UCLA on a second PC board located approximately as shown in Figure 9. The system has been breadboarded as illustrated in Figure. 10.

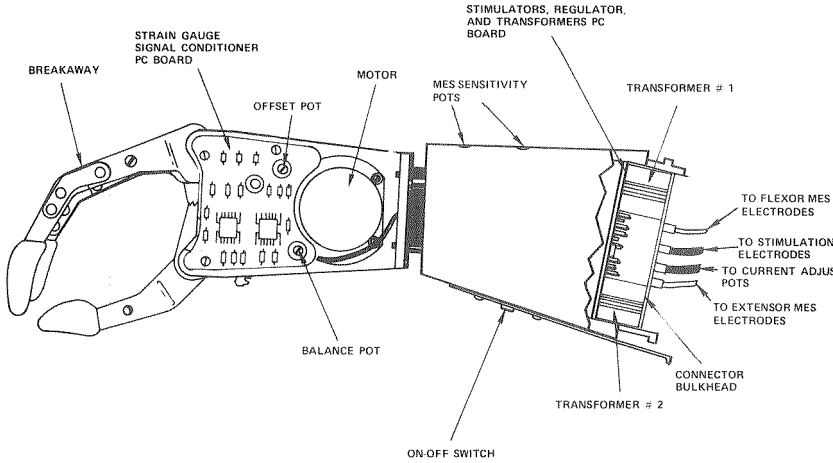

FIGURE 9.—Two-electrode grasp force and hand opening SSF system using two printed circuit (PC) boards and standard components.

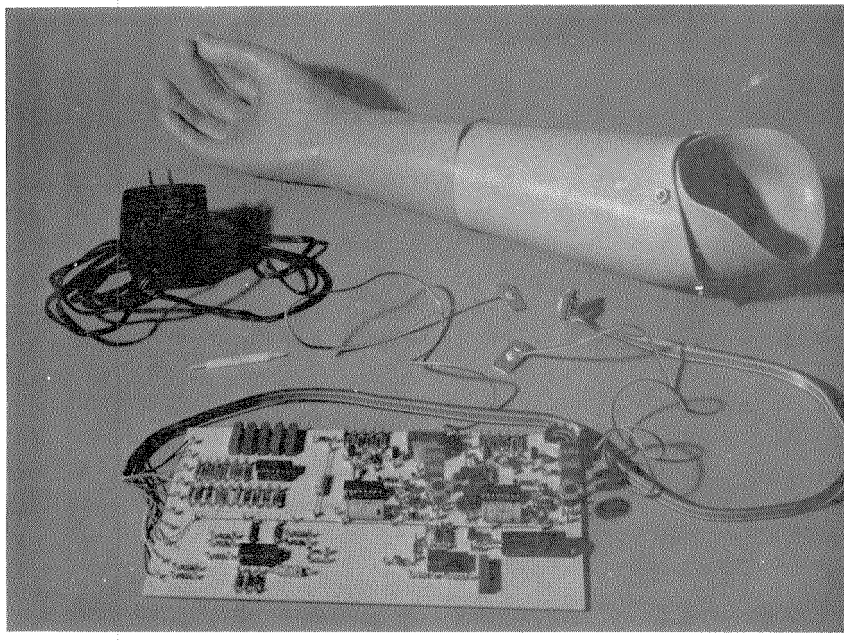

FIGURE 10.—Breadboard of the two-electrode grasp force and hand opening SSF system.

The total current drain of the system will be about 23 mA during motor movements, and about 3 mA between movements.

The weight of the finished system is expected to be about double that of the simpler single-electrode system, but will still be well under 8 oz. The cost to the amputee should be about 2 to 3 times that of the single electrode hand opening SSF system.

Acceptance of this system may be lower than for the simpler single-electrode system because of the increased cost, unless there is a marked increase in function. Only actual evaluation of the system on subjects will yield accurate information on this matter.

Four-Electrode Grasp Force, Single-Electrode Hand Opening, SSF System.

The discussion in the previous section, plus the data in Figure 11, suggest that grasp force SSF using only one electrode may not greatly increase function. Human hand grasp errors for light grasps (0 to 1 lb) tend to be much smaller than for firm grasps (> 15 lb). For example, the ability to duplicate a reference grasp is well within .25 lb over the 0-to-1 lb range, runs around .5 lbs for 10-to-15 lb grasps, and is slightly over 1 lb for 20-to-25 lb grasps. Thus the number of "just noticeable differences" (jnd's) of grasp force over the 0-to-25 lb range exceeds 30 by even a conservative estimate.

FOUR ELECTRODE PR GRASP FORCE CODE

GRASP FORCE (in pounds)	ELECTRODE NUMBER	PR (in pps)	
0	None		
.1	1	3	
.16	1	10	
.25	1	30	
.40	1	100	← TRANSITION: ELECTRODE 1 TO ELECTRODE 2
.401	2	3	
.63	2	10	
1.0	2	30	
1.6	2	100	← TRANSITION: ELECTRODE 2 TO ELECTRODE 3
1.61	3	3	
2.5	3	10	
4.0	3	30	
6.3	3	100	← TRANSITION: ELECTRODE 3 TO ELECTRODE 4
6.31	4	3	
10.0	4	10	
16.0	4	30	
25.0	4	*100	

FIGURE 11. —Four electrode PR grasp-force code.

However, the ability to *absolutely* recognize grasps must also be considered. For a normal hand, efforts to generate a .25 lb grasp without first

establishing a reference grasp consistently produce grasps between 0 and 1 lb. For a 15 lb grasp, grasps will usually range between 10 and 20 lb. Thus the number of absolute levels of grasps that can be generated over a 0-to-25 lb range typically falls between 5 and 8. This may exceed the ability of the average person to recognize pulse rates reliably on an absolute basis over a 1-to-100 pps range.

On an absolute basis, eight electrodes and the use of a simple spatial code may provide the ability to recognize grasps equal to that of the human hand. On a relative basis, since considerable information is transmitted by discrete jumps of the stimulus from electrode to electrode, the subject can be expected to be able to discriminate how much myoelectric signal he must generate to increase grasp force to the point where the stimulus switches from one electrode to another. In this manner, a subject could probably derive a larger number than eight jnd's. Actual tests on a number of subjects would quickly indicate the actual number of jnd's, and whether more electrodes are needed.

Unfortunately, even the use of eight electrodes presents practical difficulties, such as finding enough suitable stimulation sites on the amputee's stump, independently adjusting the current through each electrode to a comfortable level, maintaining proper electrode contact with the stump, system complexity, and costs, etc. One apparent solution is to simultaneously vary the PR at each electrode in addition to choosing which electrode is activated.

Figure 11 shows how such a code might be utilized for grasp force SSF. Since it would seem possible to perceive several jnd's at each electrode, a four-electrode system would probably provide the patient with the ability to discriminate at least 30 jnd's of grasp force on a relative basis and to recognize 8 levels of grasp force on an absolute basis.

Actual tests, on subjects, of the code shown in Figure 11 are needed to determine its feasibility. The following discussion shows how an SSF system using the code might be realized.

Figure 12 shows a block diagram of a possible system. Hand opening information would be relayed to the subject by varying the PR and/or PW at electrode 0. The remaining four electrodes would be used for grasp force.

The requirements on the strain gage signal conditioner would be the same as for the two-electrode system, except that drift and jitter characteristics would have to be improved by a factor of about four. The long-term drift generated in the strain gage signal conditioner therefore would have to be no greater than 2 or 3 percent, and short term drift (10 s) and noise artifacts should be no greater than about .75 percent of the signal conditioner's full-scale output. A chopper-stabilized signal conditioner using pulsed excitation of the strain gage bridge probably would be required, as would a precision voltage regulator.

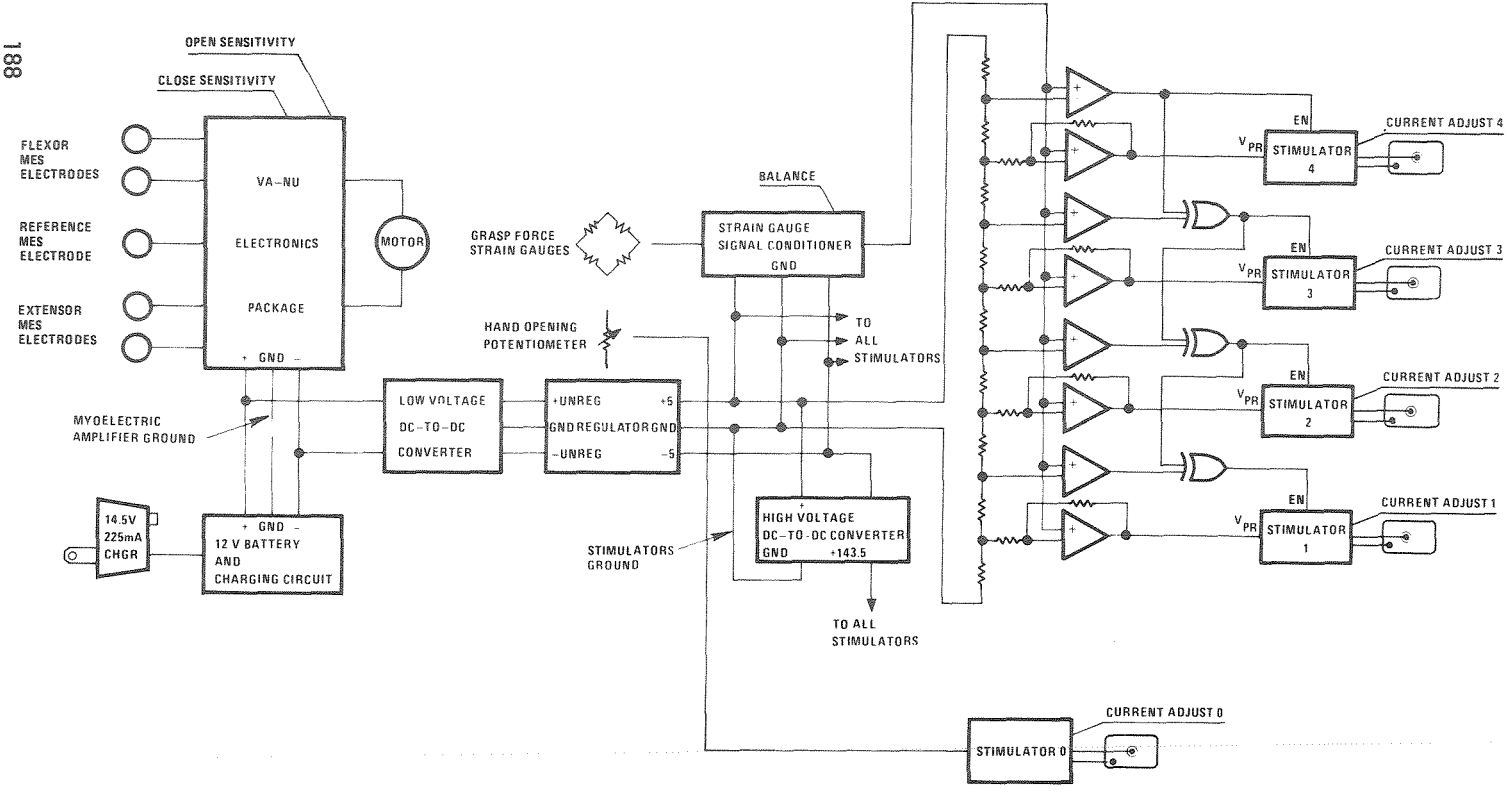

FIGURE 12.—Block diagram of the four-electrode grasp-force, single-electrode hand opening, SSF system.

The use of high voltage step-up transformers to achieve isolation of stimulator and myoelectric amplifier grounds is no longer advantageous because five transformers would be required. One low-voltage and one high-voltage dc-to-dc converter would probably occupy less space, and not be as heavy, as five transformers. The use of dc-to-dc converters would result in similar costs, and would provide somewhat better control of pulse parameters.

Since the sensitivity of forearm skin to electrical stimulation demonstrates considerable spatial variations, separate current adjustments would be required for each of the five electrodes. Five controls accessible to the subject is one possible solution; another is five preset controls for adjusting relative intensities, and one subject-accessible master current control to set the overall intensity of stimulation.

Containment of the system entirely within the hand would require the use of custom monolithic integrated circuits. Hybrid packaging techniques and the use of standard integrated circuits probably would require the use of a small amount of space in the forearm. Finally, if only printed circuit boards were used, one board would be required in the hand, and two circular boards, possibly forming a cordwood module, would be needed in the forearm (Fig. 13). The space available for the amputee's stump would be reduced by between ½ in and 2 in.

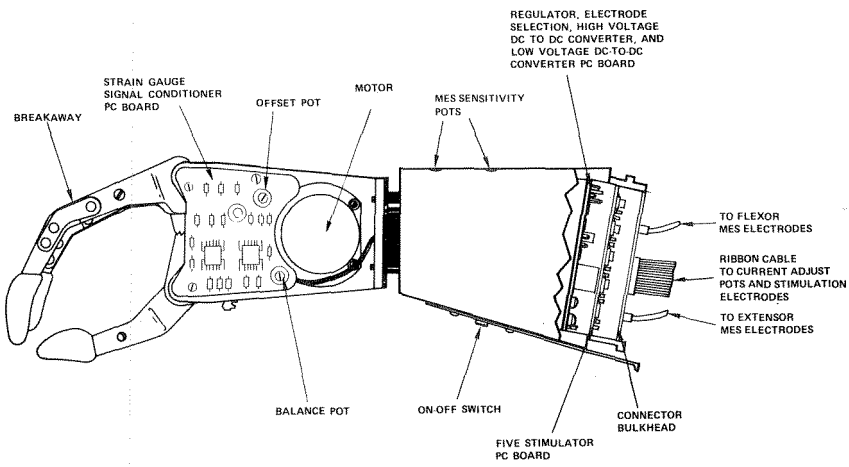

FIGURE 13.—Four-electrode grasp force and single-electrode hand opening SSF system using three printed circuit (PC) boards.

The weight of the finished system would be about three or four times that of the single-electrode system. The cost to the amputee would be about six times that of the single-electrode SSF system. This probably would be greater than $500, but less than $1000.

SUMMARY AND CONCLUSION

Methods for realizing three SSF systems for the VA/NU myoelectric hand have been shown. In some cases, estimates concerning amputee acceptance, and references relating to improvements in function, were made. These estimates are purely speculative, and are not intended as a substitute for accurate information which can only be obtained by complete laboratory evaluations of the SSF system codes and by placing the systems on subjects. At this time, it appears that all three of the systems are technically feasible, and that they could be made clinically practical through careful design.

ACKNOWLEDGMENTS

Prosthetic components were furnished by the Veterans Administration Prosthetics Center (VAPC) in New York. Discussions with Carl Mason of the VAPC greatly aided the development of our preliminary designs.

REFERENCES

1. Freedy, A., L.F. Lucaccini, and J. Lyman: Information and Control Analysis of Externally Powered Artificial Arm Systems. Biotechnology Laboratory Technical Report No. 42, Department of Engineering, University of California, Los Angeles, California, 1967.
2. Saunders, F.A.: Electrocutaneous Display. *In* Conference on Vibrotactile Communication (F.A. Geldard, ed.), Austin, Texas. The Psychonomic Society, 1974.
3. Collins, C.C.: Tactile Television: Mechanical and Electrical Image Projection. IEEE Transactions on Man-Machine Systems, MMS-11, 2:85-91, March 1970.
4. Collins, C.C., and J. Madey: Tactile Sensory Replacement. Proceedings of the San Diego Biomedical Symposium, 13:15-26, 1974.
5. Bach y Rita, P. and C.C. Collins: Sensory Substitution and Limb Prosthesis. Proceedings on External Control of Human Extremities, (Gavrilović and Wilson, eds.). Belgrade, Yugoslavia, 1970.
6. Alles, D.S.: Information Transmission by Phantom Sensations. IEEE Transactions on Man-Machine Systems, MMS-11, 1:85-91, March 1970.
7. Beeker, T.W., J. During, and A. den Hertog: Artificial Touch in a Hand Prosthesis. Medical and Biological Engineering, 5:47-49, 1967.
8. Kato, I., S. Yamakawa, K. Ichikawa, and M. Sano: Multifunctional Myoelectric Hand Prosthesis with Pressure Sensory Feedback System — WASEDA Hand 4P. *In* Proceedings of the Third International Symposium on External Control of Human Extremities (Gavrilović and Wilson, eds.), Belgrade, Yugoslavia, 1970.
9. Mann, R.W., and S.D. Reimers: Kinesthetic Sensing for the EMG Controlled "Boston Arm." IEEE Transactions on Man-Machine Systems, MMS-11, No. 1:110-115, March 1970.
10. Kaplan, J.: Augmented Myo-Sensation—A Preliminary Study. M.A. Thesis, Northwestern University, 1971.
11. Prior, R.E., and J. Lyman: Electrocutaneous Feedback for Artificial Limbs, Quarterly Progress Report #1, February 1, 1974, to April 30, 1974. Biotechnology Laboratory Progress Report No. 54, UCLA School of Engineering and Applied

Science Report UCLA-ENG-74-79, 1974.
12. Prior, R.E., and J. Lyman: Electrocutaneous Sensory Feedback for Artificial Limbs: Single Electrode Encoding of Grasp Force and Hand Position from an Externally Energized Hand. *In* Proceedings of the Fifth International Symposium on External Control of Human Extremities, Dubrovnik, Yugoslavia, 1975.
13. Prior, R.E., and John Lyman: Electrocutaneous Feedback for Artificial Limbs: Summary Progress Report February 1, 1974, through July 31, 1975. Bulletin of Prosthetics Research, BPR 10-24, Fall, 1975.
14. Rohland, T.A.: Sensory Feedback System for a Myo-Electrically Controlled Arm Prosthesis. M.Sc. E. Thesis, University of New Brunswick, Canada, 1972.
15. Rohland, T.A.: Sensory Feedback in Upper-Limb Prosthetic Systems. Interclinic Information Bulletin, XIII, 9:1-4, 1974.
16. Scott, R.M.: Myo-Electric Control Systems. University of New Brunswick Bio-Engineering Institute Research Report 74.2, Progress Report No. 13, June 1974.
17. Sueda, O., and H. Tamura: Sensory Device for the Artificial Arm. *In* Proceedings of the Eighth International Conference on Medical and Biological Engineering, Session 5-9, 1969.
18. Clippinger, F.W.: Experimentation at Duke University. Interclinic Information Bulletin, XIII, 9:4-6, June 1974.
19. Reswick, J.B., and V.L. Nickel: Annual Report of Progress, December 1973 – November 1974. Rehabilitation Engineering Center at Rancho Los Amigos Hospital, and University of Southern California. Downey, California, 1974.
20. Reswick, J., V. Mooney, A. Schwartz, D. McNeal, N. Su, G. Bekey, B. Bowman, R. Snelson, G. Irons, P. Schmid, and C. Sperry: Sensory Feedback Prosthesis Using Intra-Neural Electrodes. *In* Proceedings of the Fifth International Symposium on External Control of Human Extremities, Dubrovnik, Yugoslavia, 1975.
21. Szeto, A.Y.J., R.E. Prior, J.S. Duncan, and J. Lyman: Comparison of Electrocutaneous Codes for Sensory Feedback. *In* Proceedings of the 15th Annual San Diego Biomedical Symposium, San Diego, California, February 4-6, 1976.
22. Prior, R.E.: Study of Electrocutaneous Parameters Relevant to Dynamic Tactual Communication Systems, Ph. D. Dissertation, University of California, Los Angeles, California, 1972.