A MULTIFUNCTIONAL PROSTHESIS CONTROL SYSTEM BASED ON TIME SERIES IDENTIFICATION OF EMG SIGNALS USING MICROPROCESSORS[a b]

Daniel Graupe, Ph. D.
Professor of Electrical Engineering

Alosius A. M. Beex William J. Monlux Ian Magnussen

Department of Electrical Engineering
Colorado State University
Fort Collins, Colorado 80523

ABSTRACT

This paper describes a real-time system for separation among several limb functions, in order to provide multifunctional control of an upper-limb prosthesis for above-elbow amputees. The system employs microprocessor hardware and is based on identification of voluntary myoelectric signals resulting from isometric contractions of the musculature of the residual limb, and on subsequent discrimination of these signals for control of the several degrees of motion of the prosthesis. The system requires only one to two electrode sites. (Contrary to the usual placement of electrode pairs directly over specific muscle bellies, to eliminate crosstalk, we prefer to place our electrode pair *between* muscles so as to acquire the different weakly-correlated signals associated with each of several different voluntary functions.) The system satisfies the various practical constraints of weight, volume, and speed, as arise in practical prostheses. Preliminary amputee tests on the system have resulted in an 85 percent success rate using 8-bit double-precision microcomputer hardware.

INTRODUCTION

The problem of multifunctional control of upper-limb prostheses using myoelectric (EMG) signals is of major importance in cases of short above-elbow amputees. To solve this problem it is essential to be able to distinguish accurately each of the different signals, used

---

[a]This article is based on a paper presented at the International Conference on Cybernetics and Society, Nov. 4, 1976, held in Washington, D.C., sponsored by IEEE Group on Systems, Man and Cybernetics.

[b]Based on work performed under VA Contract No. V101(134)P-338

to control the respective artificial limb functions, from the pattern of the myoelectric signal at some or several locations on the residual limb. Therefore, differences in the pattern of myoelectric signals related to various limb functions (i.e., elbow flexion, elbow extension, wrist pronation, wrist supination, prehension, etc.), as taken from one or several residual limb muscles, must be detected. Although such differences do exist, they are hardly obvious to the naked eye of even an expert.

Two major approaches to solving this problem have been suggested.

One, based on the works of Lawrence (1) and of Lyman et al. (2), requires mapping of many (10 or more) electrode locations, at each of which the myoelectric signal is strongly correlated with a single prosthesis function. This method employs the low frequency characteristics of the myoelectric signals and of their distribution over the various electrode locations.

The other approach, developed by Graupe et al. (3, 4), requires a far smaller number of electrode locations (one to three) because it permits identification and discrimination even where correlations between the measured signal and the prosthesis control functions are very weak. This method is concerned with the complete spectrum since it considers the complete linear information content of the myoelectric signal (i.e., at all frequencies). It takes advantage of the "cross-talk" between signals due to different limb functions, rather than (as is usually the case) trying to filter out that cross-talk. It is thus more efficient in terms of utilizing the information content of the myoelectric signal and therefore fewer electrode locations are necessary, though at a price of requiring finer detection. We note that the above correlation with more than one prosthesis control function is due to the spatial integration effect of muscle fiber and skin tissue, which affects the signal as measured by surface electrodes (5) with placement of the electrode site between muscles.

The present paper will concentrate on the latter approach and describe a fast function separation and recognition algorithm, and the microcomputer hardware involved, as developed by the authors at Colorado State University. The speed, (recognition within about 0.2 s), weight, volume, and cost constraints for practical prosthesis application are noted.

OUTLINE OF THE FUNCTION-SEPARATION ALGORITHM

The principles of the present function-separation algorithm are based on time series model identification as in (3), though differ-

ing in the discrimination approach and in the identification subroutine used, as follows:

A. Parameter Identification

Because our approach attempts to extract the complete linear information content of the myoelectric signal, it is essential that data reduction be employed to the greatest degree possible in order to reduce the dimensionality of the problem without losing any information. This is achieved by first employing signal identification. Noting that the recorded myoelectric signal may be regarded as a time series that is essentially stochastic, our algorithm consists of identifying the parameters of this recorded time series in terms of an autoregressive (AR) model, given by the equation:

$$y_k = \sum_{i=1}^{n} \gamma_i y_{k-i} + \omega_k \qquad [1]$$

where y_k denotes the recorded signal, γ_i the AR parameters, n is the order of the AR model, and ω_k is white noise.

The use of an AR model in this problem is justified for the following reasons:

1. It can be proved that stationary time series can be represented by an AR model (6) as in Equation [1]. Although the myoelectric signal is not fully stationary, it has been shown (3) that this signal is sufficiently stationary, per each prosthesis control function considered, to result in AR parameters whose range of variation with time is sufficiently small to facilitate discrimination for multifunction prosthesis control.

2. It can be shown (6) that the minimum parameter linear model of a stationary time series is of the form of an autoregressive moving average (ARMA) model given by:

$$\sum_{i=o}^{m} \phi_i y_{k-i} = \sum_{j=o}^{p} \theta_j \omega_{k-j} \; ; \; \phi_o = \theta_o = 1 \qquad [2]$$

where y_{k-i}, ω_{k-j} are as in equation [1], ϕ_i and θ_j denote the AR and the moving-average (MA) parameters of the model respectively, and m and p are the order of the AR and of the MA parts of the model respectively.

Now, via polynomial division (6), equation [2] can be reduced to the form of equation [1], though it is not of minimum order. As may be seen in reference (6, section 12.6) the derivation of the minimum order ARMA parameters is rather lengthy and complex, especially compared with derivation of the AR parameters for a low order AR model. Since, in our case, computational speed is of

utmost importance and since it has been shown (3) that for myoelectric signals for upper-limb prosthesis control, n = 3 or 4 is adequate for functional discrimination and for obtaining ω_k that is almost completely white (uncorrelated), we have gone back to using an AR rather than an ARMA model in our analysis and design.

3. The linear model, as in equation [1] or [2], is fully optimal only if y_k is Gaussian, and is otherwise only linear-optimal—i.e., the best linear model for y_k. Hence, in the non-Gaussian case, a nonlinear signal model would be required for full optimality. However, without prior knowledge of the parameters, which is not available in our problem, no identification of an optimal model is possible. It should be noted that even if such knowledge were possible, it would still be too lengthy and too complex from a computational point of view to satisfy the constraints (Section A) imposed for practical prosthesis application.

Furthermore, it has been reported (5) that myoelectric signals can be considered as an outcome of a sequence of impulses with independent Poisson distributed intervals passed through a linear filter. Now, since the muscles involved (biceps and/or triceps) are usually actuated by a large number of motor units (7), say several hundred, the average Poisson interval between impulses is small compared with the dominant time constant of the linear filter. Assuming the practical average interspike interval concerned is of the order of t=100 ms, and assuming that N=200 motor units are involved in the isometric muscle contraction, the respective Poisson rate is $\lambda=N/t=2000$. Such a Poisson rate implies (8) that the myoelectric signal thus closely fits a Gaussian process. This further helps establish the validity of the linear AR model and indicates it is close to an optimal one.

For the above reasons, and noting the speed, weight, and volume constraints imposed by upper-limb prosthesis application, the choice of an AR model is thought to be well-founded.

The algorithm used for identifying the AR model above is a sequential least squares algorithm (Sections 5 and 12.6 of reference 6). This algorithm can be proved to converge to the true parameters of the signal (6, 9). Furthermore, its near-maximum-likelihood properties make it a near-efficient algorithm and therefore of fastest possible convergence rate (10); that is, it requires the least number of samples for convergence. This aspect is important in view of the constraint imposed on computational speed. But the basic least squares algorithm (6) requires a large number of computations per sample, which makes inter-sample computation time lengthy. We therefore presently employ an accelerated version of this algorithm (11), which preserves the property of fast convergence in terms of

number of samples but requires fewer computations per sample, thus reducing the overall identification time and the amount of hardware needed.

B. Limb-Function Discrimination

The identification procedure (Section A) is employed in the prosthesis control system by being run several times (say L times) per each limb function, for calibration purposes. The parameters obtained during these identification runs are averaged over the above runs and stored as sets

$$\{\bar{\gamma}_{11} \cdots \bar{\gamma}_{1n}\} \; ; \; \{\bar{\gamma}_{21} \cdots \bar{\gamma}_{2n}\} \; , \cdots \; \{\gamma_{h1} \cdots \gamma_{hn}\}$$

when h different limb functions are considered, each having n parameters. Once these parameters are stored, another calibration run[c] is made where the EMG signals $y_{k,i}$ (k = 1 . . . N, denoting time interval) related to function i (i=1 . . . h) are fed to an algorithm (i.e., a filter) that computes:

$$\hat{y}_{ki} = \bar{\gamma}_{i1}\, y_{k-1} + \bar{\gamma}_{i2}\, y_{k-2} + \cdots \bar{\gamma}_{in}\, y_{k-n} \quad ; i = 1, \ldots h \qquad [3]$$

(Alternatively, one may compute $\hat{y}_k$ from the ARMA model of equation [2], to obtain

$$y_k - \hat{y}_{ki} = e_{ki} \qquad [4]$$

where y_k = the actual myoelectric signal at the k-th time interval.

Defining:

$$E_i \triangleq \frac{1}{N} \sum_{k=n}^{N+n} e_{ki}^2 \quad ; \quad i = 1, \ldots h \qquad [5]$$

and averaging over L runs now yields $E_1 \ldots E_h$ for limb functions 1 to h, which are stored in the memory of the microcomputer.

The microcomputer system now performs the limb function discrimination as follows: feed the measured myoelectric signal y_k in parallel to filters (ARMA models) 1 . . . h to compute e_{k1} to e_{kh} as in equations [3] and [4]. From the above, compute E_i

[c]Total calibration time is 2-3 minutes. Calibration is performed by a microcomputer system based on the same microprocessor hardware used throughout. The calibration mode is actuated by a single "mode" switch to be turned by the amputee.

$i = 1, \ldots h$, and compare

$$E_i = \min_j E_j \text{ with } \bar{E}_i \text{ above.}$$

Finally, if:

$$E_i \leqslant \rho_i \bar{E}_i \quad ; \quad \text{where } \rho = \text{weighting coeff.} \qquad [6]$$

and

$$\sum_{k=1}^{M} y_k^2 \geqslant A \qquad [7]$$

to prevent actuation for a low E_i due to a situation where no myoelectric signal is measured, then limb function i of the set of limb functions $1 \ldots h$ is actuated. If this is not the case, the prosthesis will be (or remain) in a "hold" mode.

The above procedure, equations [6], [7] and the use of $\rho_i \neq 1$ serves to overcome the not completely stationary nature of the myoelectric signals related to a specific prosthesis function.

In diagrammatic form, the present design is illustrated in Figure 1. For increasing speed, hardware multipliers are used in the hardware realization of the system shown in Figure 1, especially in the blocks of the lower half of the diagram.

Note that the present design involves only simple filtering, namely multiplication and addition, rather than identification, during normal prosthesis use, whereas identification is solely performed during calibration: since identification is the most time-consuming part of the system, this implies a considerable time saving. However, discrimination may be somewhat sensitive in certain situations via this approach; i.e., when the parameters employed are somewhat biased due to incomplete convergence or to inadequate model order. Therefore, if an identification bias exists, the method of comparing parameters in a parameter vector space may be advantageous (3). (In the discrimination approach (3), discrimination must be exact if $\bar{Y} = \hat{Y}$, whereas in the present method this is not necessarily so, since the minimal error-variance may occur for the wrong prosthesis control function due to identification bias.) However, since in the present design identification is performed only during calibration and not during normal operations, sufficient computation time should be available to obtain convergence so that any biases can be eliminated.

Furthermore, if access to calibration computers is adequate, the whole calibration (top half of Figure 1) can be done by a calibration computer in a clinic so that the related hardware will not have to be incorporated in the prosthesis and be worn by the patient,

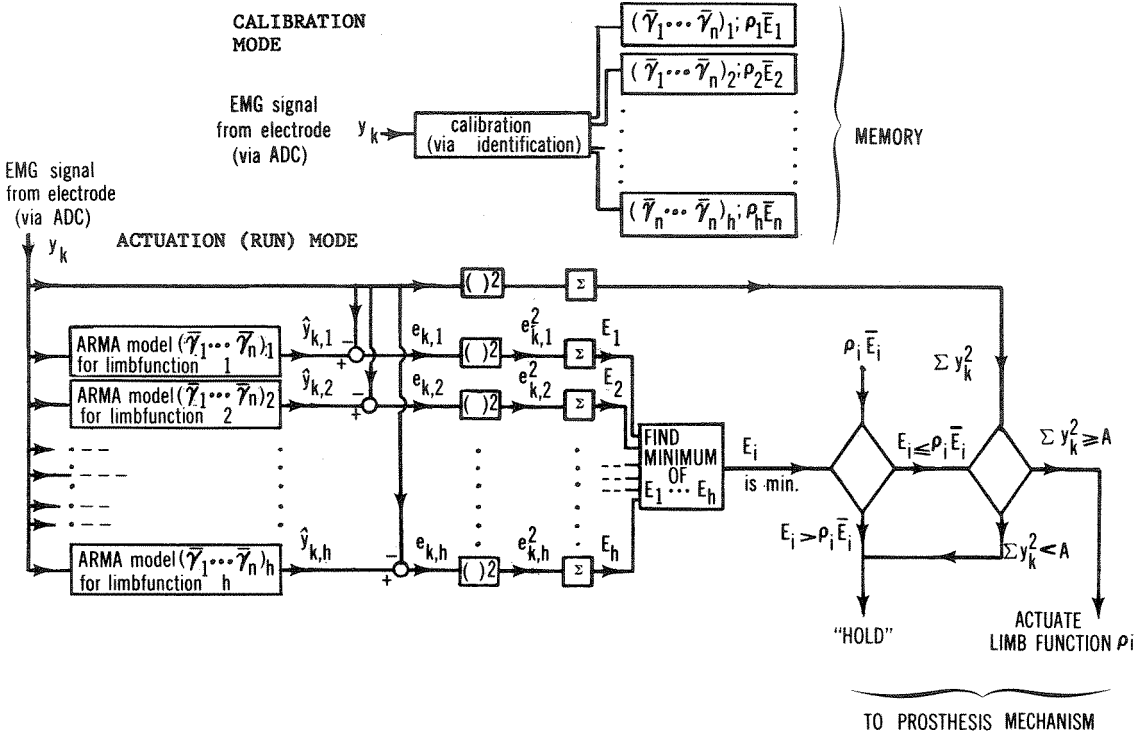

FIGURE 1.—Function discrimination scheme. The upper portion of the figure represents the Calibration Mode in which identification is performed: the larger, lower portion of the figure represents the Actuation Mode employed during normal prosthesis use. In an alternate arrangement described, the whole calibration top portion of this figure could be performed by a calibration computer in a clinic.

thus further reducing weight and cost. This, however, requires facilities for re-programing the AR parameters (top portion of Figure 1), namely $\{\overline{\gamma}_1 \ldots \overline{\gamma}_n\}$ and $\overline{E}_i$ for i=1 . . . h in the memory of the patient-worn microprocessor system as computed by the calibration computer in the clinic.

C. Control Aspects

Our present design (using only one electrode pair) can identify and discriminate five functions (j=1,2,3,4,5 above); prehension may be controlled by toe-actuation (4). Furthermore, toe movement may be used to interrupt prosthesis movement if discrimination turns out to be wrong, or to facilitate speed control. This design thus also facilitates speed and torque control.

A design for all seven of these functions is also ready; however, it involves two parallel microprocessor systems, the hardware for which is not yet complete. (A single very fast microprocessor, where computation of the tasks of the two parallel systems may be done in series, might also be used.) We note that the present five-function system employs only a single set of electrodes in contrast to two sets for the seven-function system.

DESCRIPTION OF HARDWARE

We have indicated in Section C that the present system involves one set of electrodes for discriminating and controlling five limb functions. The system feeds to a motor control and actuation unit identical to that used in a toe-controlled system (4) which has been tested by a bilateral above-elbow amputee in Los Angeles, California.

A block diagram of the system is shown in Figure 2.

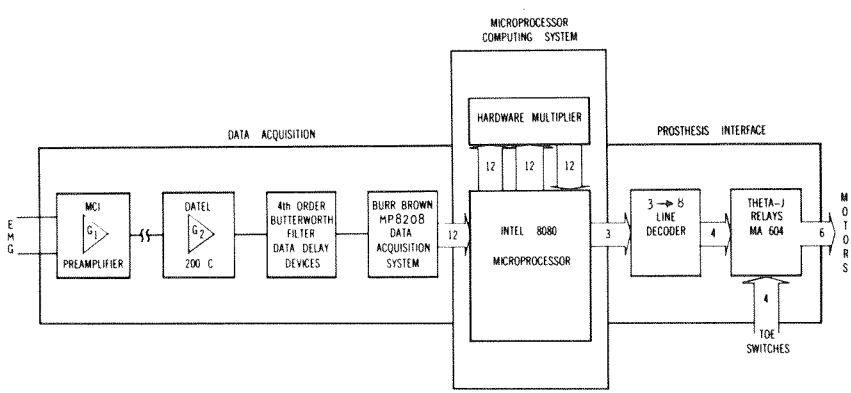

FIGURE 2.—Block diagram of system.

A. Data Acquisition

The myoelectric signal is picked-up via an EMG preamplifier unit manufactured by Motion Control Inc. (MCI), Salt Lake City, Utah. Disk type electrodes are mounted directly on the preamplifier module. (As noted above, the electrode-preamplifier assembly is located between muscles; e.g., on the medial aspect of the humerus between biceps and triceps.) The preamplifier weighs only 8 grams and does not require the use of conductive jelly or electrode paste which is often used and which can be a source of inconvenience and unreliability.

The preamplified myoelectric signal is fed to a Datel 200C instrumentation amplifier for further amplification. Undesirable frequencies are filtered out by a 4th order Butterworth bandpass filter (with a passband between 1.5 and 1500 Hz) produced by Data Delay Services. A 12-bit data acquisition system (the MP8208 produced by the Burr Brown Research Corp.) samples the EMG signal at a rate of 5000 samples per second and delivers the digital data to the microprocessor computing system. (See Figure 2 for details.)

B. Microprocessor Computing System

The microcomputer system is based on an Intel 8080 microprocessor which is an 8-bit parallel central processing unit (13). It is fabricated on a single LSI (large scale integration) chip using the latest advances in N-channel silicon gates and is furnished in a 40-pin dual in-line ceramic package, having a 2 μs instruction time (for instructions that do not refer to memory). The microprocessor is then interfaced with its input-output ports and with 4K-bytes of semiconductor memory. Furthermore, to increase speed, and since the multiply and divide instructions are the most time-consuming ones in our program, the microprocessor is also interfaced with a hardware multiplier unit based on Fairchild 9344 4X2 bit multiplier modules where multiplication time is 350 ns as compared with 1 ms in the microprocessor itself. (Note that since no division is made during normal operation, hardware division is not presently performed.) Via the latter arrangement, the complete recognition is performed within 0.2 s for the five-function system, which is within the desired time limit.

It should be noted that even with the hardware available today, such as the Intel 3000 system (which was not available when equipment for this project was purchased), a 10-times-faster system can be achieved using the same algorithm. Observing that 12-bit data

are used, the 8-bit 8080 program must be written using double word length. Therefore, use of a 16-bit microprocessor such as those now becoming available (i.e., the Plessey MIPROC-8) would further increase the accuracy and speed of the system.

C. Prosthesis Interface

The interface between the microcomputer system and the prosthesis is basically identical to that of the toe-controlled prosthesis (4). We note that the system may also incorporate toe control for interrupt, speed control, and grasp. The latter functions may alternatively be performed via processing EMG data from two electrode locations, using either two microprocessors in parallel or one fast microprocessor operating in a multiplex mode.

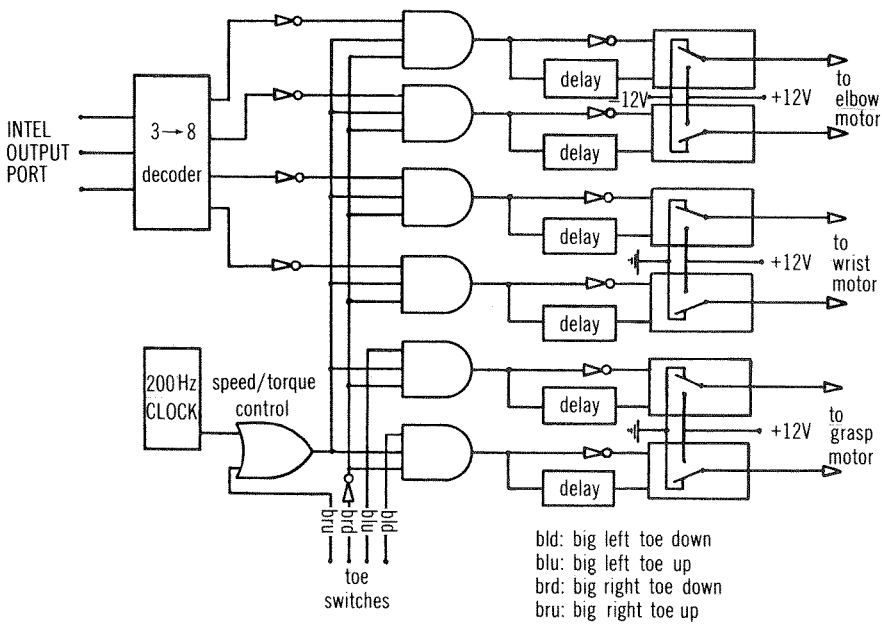

FIGURE 3.—Prosthesis interface schematic.

The microprocessor computing system latches the binary function code into an output port, from where it is decoded by a 3-to-8-line TTL decoder. The signals from the decoder directly control DIP solid-state DC power relays (MA-604 manufactured by Theta-J Relays, Inc.) which switch the power to the prosthesis' motors (Fig. 3).

FUNCTION DISCRIMINATION PERFORMANCE

The first tests using this microprocessor-based system were performed with data taken from an above-elbow amputee (amputated 7 years earlier) who had no prior training. He had severe neural and muscle loss (he had virtually no triceps, and had lost more than 2/3 of his biceps). Further tests with this amputee have yielded a success rate of 85 percent to 95 percent for discrimination among five limb functions (elbow flexion and extension, wrist pronation and supination, hold), using 3rd order AR reference models based on 200 data points and where the least squares algorithm (6) was used. Discrimination was complete within 0.2 s, using double-precision algorithms on the 8-bit Intel 8080 system described previously. With training of the amputee, and using a higher-order AR model and a longer data sequence for improved convergence (see Section B), considerable improvement in accuracy is anticipated.

In contrast to the system described in reference (3), the present system is very sensitive to identification bias since discrimination is based on a scalar error function rather than on a high dimensional vector, the scalar error function being minimal only in the bias-free case. Hence, since the unbiased AR model involves a higher number of parameters (infinity, in theory) that decrease exponentially (6), a 3rd order model is certainly biased. The use of the 3rd order model was, however, necessitated by our speed limitations. To overcome this limitation, and to reduce bias (i.e., to increase accuracy) we have recently replaced the least squares algorithm (6) with a faster version based on Luenberger's optimization by vector space methods (11), to obtain a four-fold increase in computation speed. This now allows identification of six parameters within 0.2 s.

Initial amputee tests using this faster algorithm show an enhancement of 5 percent in accuracy when four parameters are identified, versus the three-parameter case. We also comment that we have recently acquired a 16-bit Plessey MIPROC-8 microprocessor system, which is 10 times faster than our present Intel system. Once the algorithms and the analog interface are modified for this new system, present speed problems should be fully overcome—even using the original least squares algorithm which is more accurate than the speeded up version (11) for any number of parameters, due to its better convergence (10). Furthermore, using the MIPROC-8 system at double-precision should improve computational accuracy, due to reduced round-off errors, and thus contribute to even higher success rates. We also comment that since 16-bit microprocessors of equal or higher speed than the MIPROC-8 are now

commercially available, further increases in discrimination speed are a certainty.

CONCLUSIONS

We have described a prosthesis control system based on microprocessor hardware whereby control of an artificial limb for above-elbow amputees is accomplished in several degrees of freedom. (We comment that though this discussion relates to above-elbow amputees, a major beneficiary may be the shoulder-disarticulation amputee, for whom many functions must be activated yet only a few control sites are available.) The design is based on employing time series identification techniques for parameter discrimination. The system's design is outlined in terms of its hardware and software. The system is presently undergoing clinical testing on an above-elbow amputee in cooperation with the Prosthetic and Sensory Aids Service of the Veterans Administration Hospital in Denver, Colorado, and initial results are reported.

We comment that the present system enables multifunctional limb control at will, with minimal training, using one or two electrode sites, and is within volume and weight constraints for practical prosthesis applications. An incorporation of the present system with a toe-controlled one for increasing the number of controllable functions, as is required for bilateral above-elbow amputees, is also underway.

The clinical test results reported are for a Vietnam-era amputee who was amputated 7 years ago and who had no previous EMG training. These results were obtained after only several hours of work with the system, this time being in periods of 30-45 minutes work with the system, separated by 2-6 weeks with no additional training in-between. All our results are real-time obtained from standard microprocessor hardware as described, using 8-bit double-precision word length on an Intel 8080-based system.

ACKNOWLEDGMENTS

This work was performed under contracts V101(134)P-111 and V101(134)P-338 of the Veterans Administration Department of Medicine and Surgery. The authors are greatly indebted to Dr. Eugene F. Murphy, Director, Research Center for Prosthetics of the Veterans Administration, in New York City, for his constant encouragement and advice.

REFERENCES

1. Lawrence, P.: Computer Design and Simulation of a Myoelectric System for Controlling a Multifunctional Prosthetic Hand. *In* Proc. Symp. on Pattern Recognition

and Mathematical Image Processing. Chalmers University, Göteborg, Sweden, Aug. 1972.

2. Lyman, J., A. Freedy, and M. Solomonow: Studies toward a Practical Computer-Aided Arm Prosthesis System. Bull. Prosthetics Res., BPR 10-22:213-225, Fall 1974.
3. Graupe, D., and W. K. Cline: Functional Separation of EMG Signals via ARMA Identification Methods for Prosthesis Control Purposes. IEEE Trans. on Systems, Man and Cybernetics. Vol. SMC-5:252-259, Mar. 1975.
4. Graupe, D.: Control of Upper-Limb Prostheses in Several Degrees of Freedom. Bull. Prosthetics Res., BPR 10-24:236-238, Fall 1975.
5. Brody, G., P. Balasubramanian, and R. N. Scott: A Model for Myoelectric Signal Generator. Med. & Bio. Engng., 29-41, Jan. 1974.
6. Graupe, D.: Identification of Systems, 2nd Edition. R. E. Krieger Publishing Co., New York, 1976. (Sections 5 and 12.6.)
7. Rasch, P. J., and R. K. Burke: Kinesiology and Applied Anatomy, 5th Edition. H. Kimpton Publishers, London, England (p. 55).
8. Papoulis, A.: Probability, Random Variables, and Stochastic Processes. McGraw-Hill, New York, 1965. (Chapter 16.)
9. Graupe, D., D. J. Krause, and J. B. Moore: Identification of Autoregressive Moving-Average Parameters of Time Series. *In* IEEE Trans. on Aut. Cont., AC-20:104-107, Feb. 1975.
10. Saridis, G. N.: Comparison of Five Popular Identification Algorithms—A Survey. *In* Proc. Decision and Control Conf., IEEE, New Orleans, 1972.
11. Luenberger, D. G.: Optimization by Vector Space Methods. John Wiley and Sons, New York, 1969.
12. Datel Systems, Inc., Engineering Product Handbook. No. AT 75408.
13. Intel Corp., Intel 8080 Microcomputer Systems Manual. 1975.