HIGHLIGHTS OF OTHER VA RESEARCH PROGRAMS

PROSTHETICS

Edited By

Eugene F. Murphy, Ph. D., Director

Research Center for Prosthetics
Veterans Administration
252 Seventh Avenue
New York, N.Y. 10001

Research and Development in the Field of Artificial Limbs
Mauch Laboratories
3035 Dryden Road
Dayton, Ohio 45439
Hans A. Mauch

Hydraulic Ankle Control System

Development has reached the stage where shakedown tests will be conducted by the Research Center for Prosthetics, New York. During this reporting period the following has been accomplished.

1. The difficulties encountered with noises originating from the attachment areas for the hydraulic unit inside the aluminum keel, from the spherical bearing collar around the piston and rod neck, and from the elements for the attachment of the piston rod tip to the inside of the extruded shank tubing have been resolved. It was necessary to find a different solution for each of the three locations. There is still a possibility that some noises will occur in the future as a result of the effects of long-time wear.

2. The loosening of the keel screws has been overcome by making them of one piece of hardened steel, thicker, and with a shallower pitch (1/4–28). In addition, their shoulder angle (and the countersink angle in the keel screw holes) was changed from 120 deg to 82 deg. Finally, non-locking Heli-Coils are used, all this for maximum rigidity.

3. An alternative polyurethane foam compound for the rubber foot has been located. A foot molded of this compound with the same total weight showed better skin formation resulting in a

tougher outside and a softer inside. No wear symptoms were found after 4 months of use.

Foot molds for sizes 9 through 11, left and right, are 100 percent completed, and for size 8, left and right, 50 percent completed.

4. A pre-production hydraulic unit (No. 4) has been made using improved measuring and machining methods and replacing the semi-cylindrical bypass valve inside with a flat one, thus greatly simplifying the manufacturing process for the eight remaining shakedown tests and all future systems. The unit has been test-worn for 2 months without any adverse findings.

Hydraulic Knee Control System for Geriatric Amputees

Development has been continued and has resulted in a prototype design which incorporates the following features:

1. The outside geometry of the hydraulic system will be compatible with all existing above-knee legs which accept the standard length S-N-S system and the standard length swing control systems of other manufacturers. Its cylinder part will be sufficiently shortened to permit the use, at its lower end, of a crossbolt instead of the two cylinder studs presently needed. There will also be sufficient space between this crossbolt and the underside of the cylinder bottom for the optional installation of the eccentric inserts which were formerly used around the two ends of the top bolt of the S-N-S system. Rotation of the crossbolt will then again permit the adjustment of the knee angle at full extension.

2. The stance control elements will remain essentially the same as in the S-N-S system except for a shortening of the piston rod to make possible the geometry described in point 1. The switch lever at the top of the piston rod will be somewhat shortened, to interfere less with full length cosmetic covers of pylon-type legs.

3. The swing control portion will be completely redesigned retaining as much as possible the swing characteristics of the S-N-S system. The displacement of the hydraulic fluid necessary for producing flexion resistance will be provided by the volume of the piston rod itself during its downward motion into the cylinder. The amount of fluid displacement obtained in this manner is slightly more than that produced in the S-N-S system for the same purpose by a special small piston.

The fluid displacement necessary for the extension resistance, including terminal deceleration, is obtained by letting a shoulder

at the lower end of the piston rod enter a closed cylindrical space during its upward motion.

The characteristic profiles of the flexion and extension resistance, respectively, are achieved by specially shaped recessed areas on the surface of the piston rod, which in conjunction with recessed areas in the surrounding elements, provide escape ports for the hydraulic fluid which vary during the piston rod motion in an appropriate manner.

The necessary adjustments of the swing resistances for the individual user are produced by turning these surrounding elements relative to the piston rod. Since these elements are attached to the cylinder wall, turning of the cylinder within the cylinder bottom will adjust both the flexion and extension resistance simultaneously in a balanced manner, thus eliminating the need for separate adjustments which led to confusion in many cases.

4. Great care has been devoted in the design to the "air management" problem, which means the design features which will reduce the likelihood of air getting into the wrong places inside the hydraulic system during unusual (horizontal or upside down) working positions, and which will speedily eliminate air which does get into the wrong places, as soon as normal walking motions are resumed.

5. A special effort has been made to avoid as much as possible mechanical friction throughout the hydraulic system and to reduce its weight and cost, all especially important for a geriatric amputee.

Testing of various basic design elements, particularly for the radically new swing control, has started. No insurmountable difficulties have been encountered so far and there seems to be a good chance that the resulting hydraulic system will not be restricted to the use in geriatrics, but may develop into a successor to the present S-N-S system, with a lower price and longer life expectancy.

No reportable progress was made in the development of the *Voluntarily Actuated Swing and Stance Control System* because of higher-priority work.

New Three-Part Knee Bolt Design

The development of the Three-Part Knee Bolt is completed. In October, drawings (Fig. 1-5), sample bolt assemblies including side straps, and a typical bid for the manufacturing of these bolts in quantity have been made available through the VA to interested suppliers. The new bolt design has the following advantages:

1. Closer control of side-play on the knee bolt.

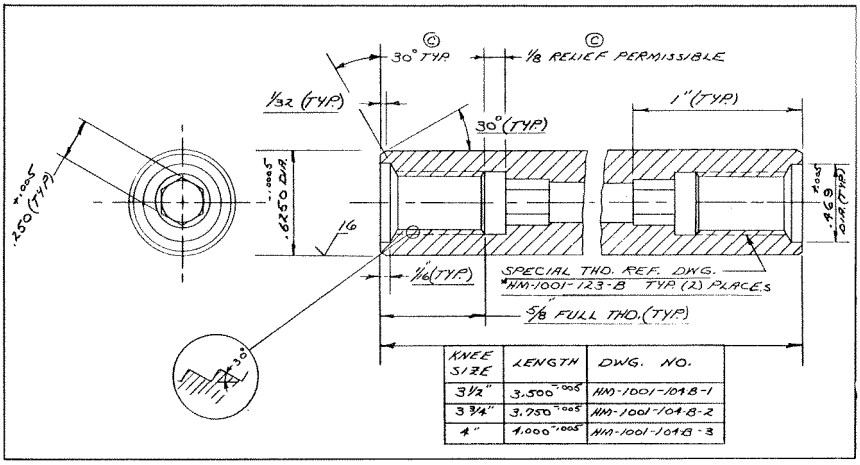

FIGURE 1.—Knee bolt. The shop drawing reproduced here also carried notes as follows: 1. Both threads and o.d. must be concentric within .005 T.I.R., and coaxial with each other and square with bolt ends within .002 in. per in. 2. Remove all burrs. The material was noted to be 5/8 o.d. 3/16-wall seamless steel tube.

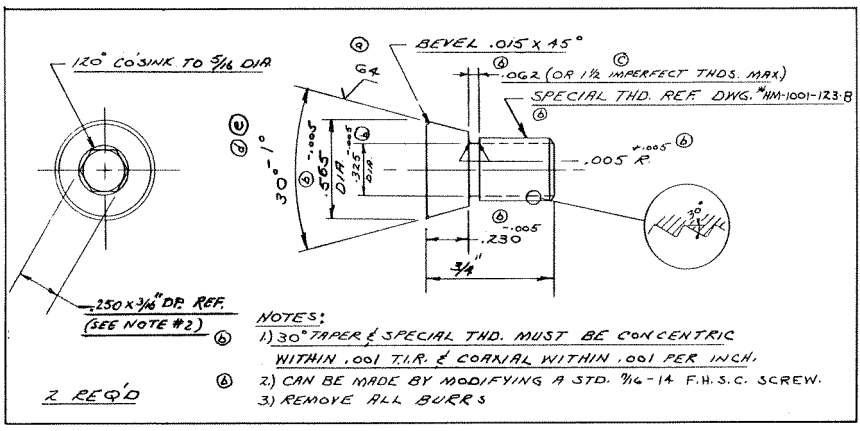

FIGURE 2.—Knee bolt screw.

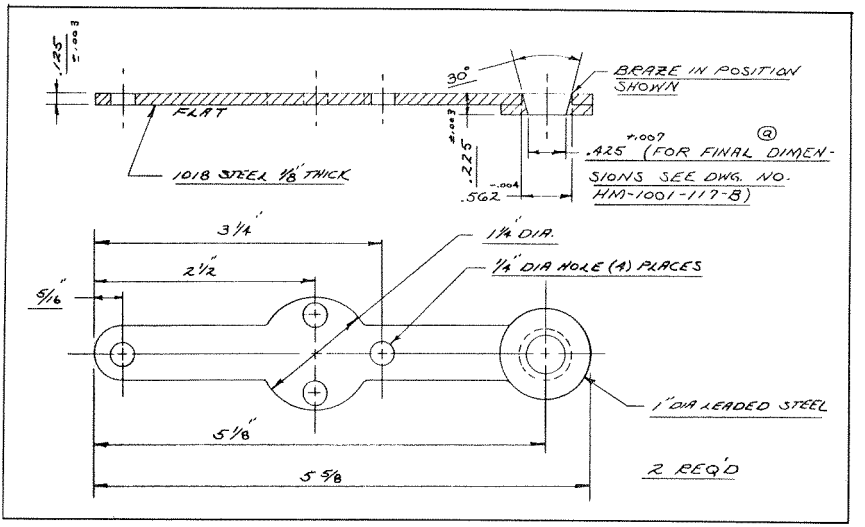

FIGURE 3.–Shin strap, first operation in fabrication.

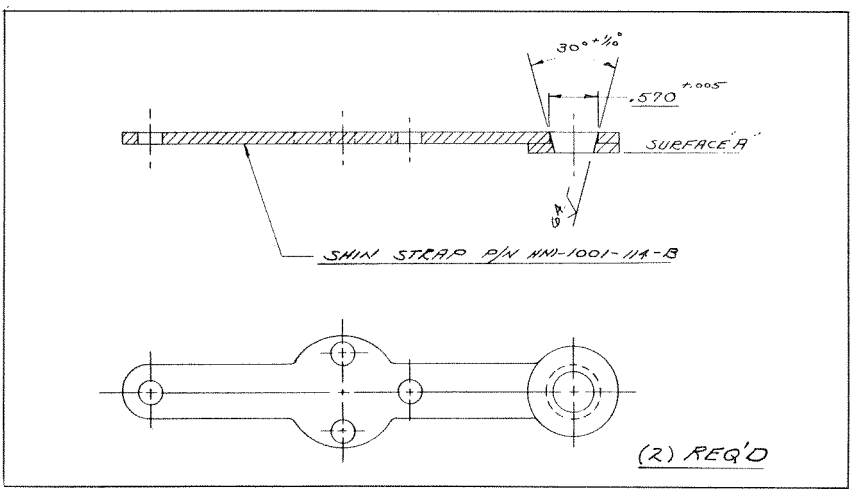

FIGURE 4.–Shin strap, second operation in fabrication. The shop drawing reproduced here also carried the note: "Centerline of tapered hole must be square with surface 'A' within .001 in. per inch."

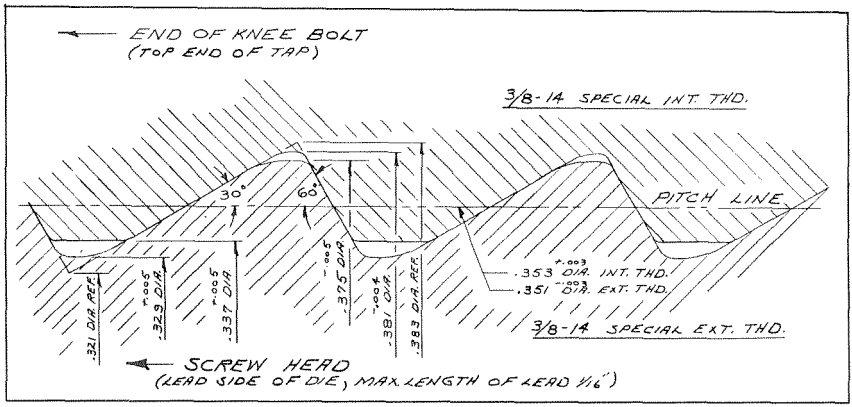

FIGURE 5.—Thread data, three-part knee bolt.

2. All parts are positively interlocked (no slippage or noise at load reversal).
3. No left-hand thread needed to prevent bolt rotation in either direction.
4. Disassembly can start from either side of the leg.
5. Fewer different parts (both screws and both straps are identical).
6. Low price.

In November 1976, final bolt assemblies were sent, for exchange in the 24 existing test shanks, to the VA Prosthetics Center in New York and to all prosthetists involved in the field tests.

Stump Stress Analysis
Research Center for Prosthetics
Veterans Administration
252 Seventh Avenue
New York, N.Y. 10001
Leon Bennett, M.A.E.

Within this report period, Mr. Bennett left his position with NYU to accept a position at the Research Center for Prosthetics of the VA. While the effort concerning stump stress will continue at the VA, there has been a hiatus during which a suitable laboratory facility will be prepared. It is anticipated that research efforts will resume in the summer of 1977.

Prosthetics Research
Northwestern University, Prosthetics Research Laboratory
Room 1441, 345 Superior Street
Chicago, Illinois 60611
Robert G. Thompson, M.D., and Dudley S. Childress, Ph. D.

Synergetic Hook and Hand

Twelve prototypes of the synergetic hook, a powered terminal device developed in this laboratory, have been produced by a manufacturer under a Veterans Administration Prosthetics Center (VAPC) contract. These prototypes are to be evaluated in a small clinical study coordinated by the Research Center for Prosthetics and directed by the VAPC. The hook, which is interchangeable with a hand, is shown in Figure 6. The amputee pictured in Figure 6 is preparing to attach the hook to the prosthesis.

Specifications for the synergetic hook are as follows:

1. Closing/opening rate, typically $\geqslant 4$ rad/s;
2. Closing time from full-open position $\cong$ 350 ms;
3. Maximum opening $\cong$ 80 deg (4.25 in. between fingertips); and,

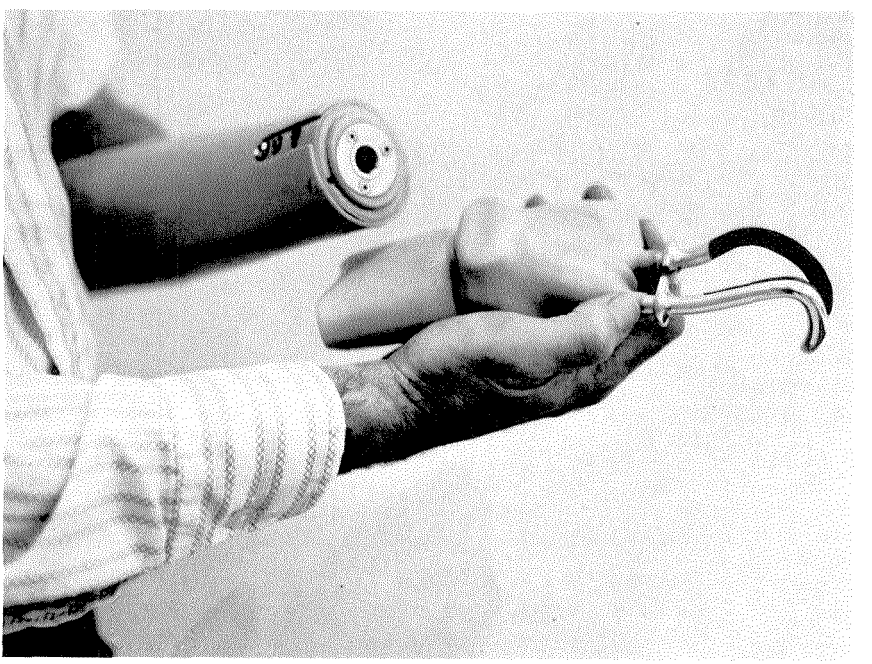

FIGURE 6.—Synergetic hook, which is interchangeable with a hand. Amputee is shown preparing to attach the hook to the prosthesis.

4. Maximum pinch force ≅ 25 lbf (111 N).

Patients fitted with this device have responded favorably to its performance.

Preliminary success with the synergetic hook has resulted in the development of a synergetic hand in this laboratory. This hand is based on the same design principles as the synergetic hook. Problems associated with a cover and glove for this hand are being examined. The soft inner liner and glove must be very flexible in order not to inhibit the "fast" fingers of the synergetic hand.

The synergetic hand is desirable to complement the synergetic hook because interchangeable hands and hooks should have dynamic responses which are similar. One hand has been fabricated in the laboratory and attempts to develop suitable cosmetic covers are underway.

Further development of the synergetic hook/hand and associated controls is continuing. It is desirable to reduce battery size in order to minimize weight, and to make possible a control unit which is compatible for wrist-disarticulation amputees as well as other below-elbow amputees.

Above-Elbow Prosthesis Control

Dr. David Simpson's concepts of extended physiological proprioception (e.p.p.) are being followed in the development of an electrically powered arm having three degrees of freedom. A laboratory model for control of a powered elbow has been constructed. A hydraulic link is being examined to form the connection between input and output. In this way the output can be reflected at the input without the orientation demands necessary for cable linkages. The object of the work is to construct a controller and arm which permit subconscious control of several degrees of freedom for the shoulder-disarticulation amputee.

Lightweight Below-Knee Prosthesis

Seven below-knee amputees (two bilateral) have been fitted with nine lightweight prostheses. The lightweight prostheses have been favorably received and have particular advantages for the geriatric amputee. Attempts are being made to improve the fabrication process, to improve cosmesis, and to develop alternate suspension techniques. Prostheses already fitted and in use are now being modified or replaced—this is instead of fitting more recently developed versions to new subjects.

Thoracic Suspension Harness

The thoracic suspension harness continues to be evaluated on above-elbow amputees. This technique has also been applied successfully on subjects with orthotic problems.

Atmospheric Pressure Suspension Systems

Two self-suspending prostheses for above-elbow amputations are being fabricated. Atmospheric pressure suspension (APS) of prostheses was examined extensively in this laboratory a few years ago. The technique was successful but there were problems with socket materials and the fabrication technique was not simple enough for wide use. Also, a cast modification approach which was applicable to a wide range of amputees was not thoroughly developed.

One socket will be used with myoelectrically controlled hand prostheses and Otto Bock arm pylon. The other socket is for a congenital amputee who wishes a prosthesis for playing racquet ball.

Northwestern University Below-Elbow Socket

A casting technique using alginate is being developed for below-elbow sockets. The socket design as originally proposed by John N. Billock calls for an undistorted impression of the limb to be taken. A casting fixture which automatically sets proper elbow flexion and which contains the alginate has been constructed. The method is simple and not expensive. When coupled with Billock's cast modification scheme, and cellulose acetate butyrate (CAB) for a check socket, it is possible to obtain excellent prosthetic fittings.

Fundamental and Applied Research Related to the Design and Development of Upper-Limb Externally Powered Prostheses

University of California, Los Angeles
School of Engineering and Applied Science
Biotechnology Laboratory, 3116 Engineering 1
Los Angeles, California 90024
John H. Lyman, Ph. D., Amos Freedy, Ph. D., Ronald Prior, Ph. D., and Moshe Solomonow, Ph. D.

Control of an Artificial Limb with Several Degrees of Freedom of Motion

Work at the Biotechnology Laboratory during the period of June 1976 through December 1976 concentrated on the following subjects:

1. Development and assembly of a microprocessor control system for a prosthesis with three degrees of freedom of motion;

2. Development, finalization, and testing of pattern recognition for a given amputee subject;
3. Continuation of the investigation of proper codes, pulse widths, and phase shift parameters to optimize electrotactile information transmission for sensory feedback purposes from a prosthesis with three degrees of freedom of motion.

An RCA-COSMAC microcomputer development system was purchased to develop the control system hardware and software for the prosthesis. This system includes the microprocessor kit, COSMAC microkit interface with an 1802 emulator, and COSMAC floppy disk system. The various components were set up, interfaced, and debugged. In addition, the microprocessor was assembled in a belt-mounted package 6 in × 4 in × 1½ in. The continuation of the work awaits shipment of the memory chips from RCA.

The amputee experiments included the demonstration of myoelectric control in conjunction with pattern recognition techniques. The experimental setup is composed of the following components (shown in the block diagram of Figure 7):

1. The computer (an Interdata Model 70) with its associated peripheral support equipment;

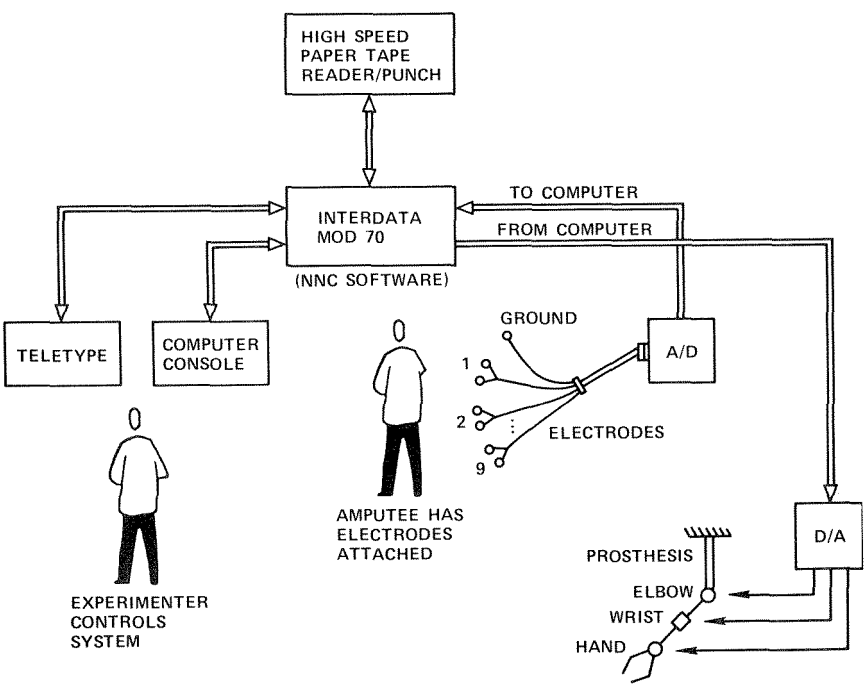

FIGURE 7.—Hardware components for experiment.

2. The A/D converter and nine pairs of myoelectric signal (MES) amplifiers, and

3. A prosthesis with three degrees of freedom of motion.

The amputee sat in a chair with nine electrodes (plus a ground) attached to the body (Fig. 8). The experimenter, in conjunction with the subject, trained the computer to recognize myoelectric signals (MES) from the electrodes. The computer then used a pattern recognition technique called the Nearest Neighbor Classifier (NNC) to determine, from the incoming MES, which motors of the prosthesis to actuate (i.e., how to move the prosthesis).

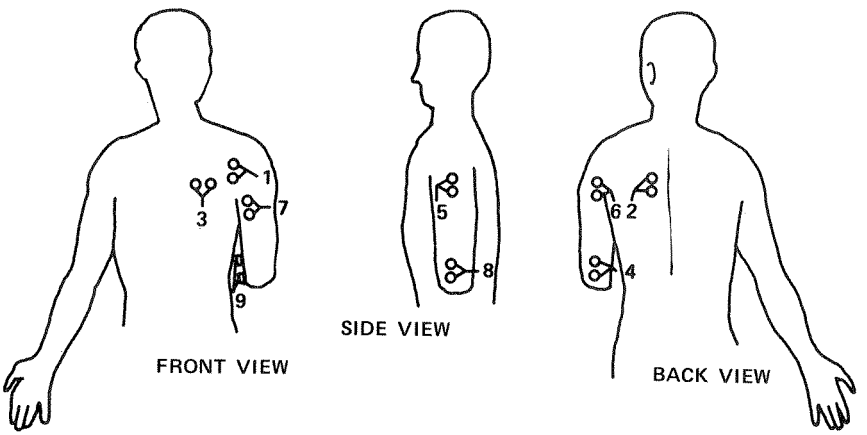

FIGURE 8.—Typical placement of electrodes on a subject's body.

The prosthesis was attached to a test stand located near the subject and properly oriented in relation to the amputated arm. Three degrees of freedom—elbow, wrist, and hand (opening and closing)—were available for computer control.

Results

The first experiments were used to determine the relation of MES inputs to system performance. A single group of nine MES inputs (one for each electrode) can be used by NNC or many such groups can be read in, averaged, and used. Experiments determined that averaging together 128-144 such groups (each group composed of nine electrode signals) resulted in better prosthesis control. This may be because of the sample size or because of the delay caused by more input: this remains to be determined.

Later experiments concentrated on training several degrees of freedom at once. Results of these experiments showed that the subject could control elbow, wrist, and hand movements independently. Some coordinated movements were also trained with reasonable results. These were: a combination of elbow flexion and wrist pronation, and a combination of elbow extension and wrist supination. (Although the combinations of elbow flexion-and-supination, and elbow extension-and-pronation, are considered more functional patterns of motion, the subject was easily trained to control these motions.) Control over nine functions was obtained in some experiments (elbow flexion, elbow extension, wrist pronation, wrist supination, hand-open, hand close, combined elbow flexion and wrist pronation, combined elbow extension and wrist supination, and rest (no movement)).

Electrode placement was found to be important in obtaining good control. Better electrode placement resulted in more distinct MES inputs and allowed the computer to make a movement decision more accurately.

The investigation of the response of tactile sensation to electrical stimulation via two adjacent electrodes, in order to determine the two-point-discrimination threshold as a function of frequency, pulse width, and phase shift within the two pulses, is being continued. Current data are too preliminary for reliable results.

Design of Prosthetic and Orthotic Devices and Biomechanical Studies of Locomotion

Biomechanics Laboratory
University of California, Berkeley
5144 Etcheverry Hall
Berkeley, California 94720
Charles W. Radcliffe, Don M. Cunningham, and James M. Morris, M.D.

Design of Lower-Limb Prosthetic and Orthotic Devices

1. *Four-Bar-Linkage Polycentric Pneumatic Knee*

Further development of cosmetic covers for the four-bar knee was undertaken in response to feedback from a commercial vendor who quoted very high prices for the two main parts of the original knee fairing. A new one-piece preshaped fairing of semiflexible foam has been designed to reduce costs and provide a resilient knee with improved cosmesis and simplified assembly. Construction of a

mold for the knee fairing has begun. The new design also allows significant simplifications in the spherical alignment coupling and socket attachment.

2. *Six-Bar-Linkage Unit with Friction Swing-Control*

Twelve units were produced by the Navy Prosthetics Research Laboratory (NPRL) in Oakland, California. Tests on four subjects have revealed generally good function but inadequate strength in the proximal bearings. A design revision to achieve greater bearing resistance to lateral bending moments was undertaken.

3. *Friction-Stabilized Knee*

The knee-brake of the friction-stabilized knee is designed to engage at heel contact but automatically release when weight is transferred to the forefoot. This automatic control is achieved by appropriate alignment of a swinging link that carries the brake and knee bolt. The first prototype, reported earlier, was unsatisfactory because the brake re-engaged as soon as the knee was bent just prior to toe-off, preventing the desired smooth entry into swing phase. A second prototype, completed during the present report period, effectively corrected these stance-phase problems by relocating the swinging link in the shank, distal to the knee bolt.

Another design goal was to obtain a useful swing-control function by means of the same brake that provides knee stability at heel contact. However, the new unit could not be adjusted to provide a smooth and reliable swing-control torque because of a foot-heavy distribution of mass in the shank. Development will continue.

4. *Tube Couplings for Modular Protheses*

Eight units of the simplified version of the internal expanding coupling for VA standard 35mm pylon tubing have undergone amputee or machine tests. These include two couplings built into the metal keel SACH feet, three couplings for conventional SACH feet, and three distal knee couplings. No problems with strength have appeared, but occasional difficulties in releasing the couplings after test were encountered. A search for a more suitable material for the expansion collar will be undertaken.

5. *SACH Foot with Metal Keel*

Two additional models of the previously reported aluminum keel SACH foot, with integral pylon coupling and solid rubber cushion at the forefoot, were molded with the aid of NPRL. One was tested by Hosmer-Dorrance Corp. for 80,000 cycles of simulated walking and the other was worn by an above-knee amputee

for approximately 3 months. At the end of these tests, both feet had worn through the molded foam under the forefoot to expose the solid rubber cushion. The tip of the rubber cushion had fractured in the machine-tested model. The aluminum keels and pylon couplings showed no structural problems, but the coupling on the machine-tested unit was difficult to remove after the test. Refinement of this design will continue.

Biomechanical Studies of Human Locomotion

1. *Gait Dynamics*

Analysis of joint work and segment energy was interrupted by the departure of Dr. M. Y. Zarrugh from the laboratory to assume an academic position elsewhere.

As a continuation of previously reported studies of gait dynamics, kinematic data from six additional normal male subjects were obtained on the treadmill at each of six different speeds. Simultaneous recordings were obtained, by use of string transducers and electrogoniometers, of pelvis motions (three linear and three angular) and flexion angles of the right hip, knee, and ankle.

Considerable variation among subjects was observed. Comparisons with previous data and with data from other laboratories revealed some unusual characteristics in the vertical motion curves. It is suspected that these may be artifacts resulting from the nature of the body attachments used. Based on experience with the clinical goniometers, revisions of the laboratory instrumentation were undertaken to include both right and left legs and to provide a more precise reference of body segment positions to the vertical.

2. *Unequal Leg Length and Low Back Pain*

Unilateral low-back-pain in patients with unequal leg lengths has been the subject of a collaborative project with a local physician. The first order of business has been to develop reliable objective methods for assessing inequality of leg length. X-ray exposures have been made to check the accuracy of a non-invasive technique that uses a leveling frame in contact with right and left iliac crests. In practice, lifts are placed under the short leg until the level indicates that pelvic list has been eliminated.

Considerable difficulty was encountered in trying to obtain reliable leg length measurements—even from the X-ray exposures. To obtain good correlation between the size of the lift placed under the foot and the amount of lift at the femoral head indicated by the X-ray exposure, it was necessary to take four precautions: (i) include an independent horizontal reference in each exposure,

(ii) control the spacing between the feet, (iii) position the X-ray source at the level of the higher femoral head, and (iv) insure that both knees are extended at the instant of exposure. On patients without marked asymmetry of the pelvis, the non-invasive technique appears to be quite accurate.

Following development of reliable methods for static assessment of leg length inequality, an attempt will be made to identify dynamic gait measurements that can be used to assess functional leg length inequality and to help with assessments of the therapeutic value of corrective lifts.

3. *Instrumentation for Clinical Gait Evaluation*

As previously reported, a portable measurement system for clinical gait evaluation was developed as a simplified outgrowth of special instruments that had been designed for kinematic measurements in the locomotion laboratory. The system includes four basic elements: (i) an instrumented walkway for measurement of average velocity, step duration, and step length in completely unencumbered patients; (ii) a lightweight set of precalibrated self-aligning goniometers for simultaneous measurement of flexion angles at both hips and both knees; (iii) foot switches for use with the electrogoniometers to detect hindfoot and forefoot contact of both feet; and, (iv) an oscilloscope display that simultaneously presents hip-knee angle diagrams for both left and right legs.

The angle diagrams are X-Y plots of hip flexion versus knee flexion. They are desirable because they clearly show interaction between hip and knee during walking, and they allow superposition of successive walking cycles without the need for oscilloscope synchronization. Changes in hip-knee coordination cause evident changes in the shapes of the patterns, as do changes in walking speed. Photographs of the diagrams, along with records of velocity, step length, and step duration, are filed in the patient's medical records.

During June of 1976, a test of this system was undertaken in collaboration with the Walking School of the Department of Orthopaedic Surgery, University of Uppsala, in Sweden. During the summer the system was installed and tested and an experimental protocol was established. Tests of patients are to continue for approximately one year with particular attention to amputees and candidates for total joint replacement. As of January 1, 1977, 22 patients had been examined, including 6 above-knee and 3 below-knee amputees, and 8 preoperative and 5 postoperative joint-replacement patients.

Experience with the system to date provides a basis for some preliminary observations and conclusions—

The hip-knee angle diagrams are an effective display for illustration of hip-knee coordination and the effects of reduced hip and knee joint mobility.

With the exception of the foot switches, which were troublesome, the system was easy to apply, reliable, and effective at documenting several significant gait variables.

Automatic processing and display of foot switch data (which is not possible with the present system) would be an essential feature for a truly practical clinical instrument.

On the 10-meter walkway, a single electrical cable connected to the patient presented little or no difficulty during the testing.

The ability to measure velocity, step length, and step duration both before and during instrumented runs is a valuable safeguard against alteration of the patients' gait by the goniometers.

Precalibration of sensitivity and zero settings of the goniometers is absolutely essential for a simple and quick experimental procedure.

Mobility Aids for the Physically Handicapped

1. *PRAHN Wheelchair*

The Berkeley tests of the preproduction PRAHN (Powered, Reclining, Adjustable-Height, and Narrowing) wheelchairs suggested a number of design changes, primarily larger batteries and motors, increased ground clearance, and smaller rear wheels to better clear the armrest. The redesign incorporating these changes is well under way, with working drawings expected in October 1977. The new chair will incorporate a linkage for properly constrained recline kinematics, as well as a spring suspension and curb-climber option.

A. *Fail-Safe Brake.*—A solenoid actuated brake, that is activated when the power to the solenoid is interrupted, has been designed and is currently being tested on the spring suspension powering unit. The brake will also be used on the new PRAHN wheelchair.

B. *Spring Suspension Powering Unit.*—The spring suspension powering unit has continued to perform well. Further developments have been made and there are plans to make ten of these locally.

2. *Urinal Bag Clamp*

A urinal bag tube clamp has been designed that allows a quadriplegic to empty his urinal bag with a light pull of a string. Initial tests have been very successful.

Immediate Postoperative Prostheses Research Study
Prosthetics Research Study
Eklind Hall, Room 409
1102 Columbia Street
Seattle, Washington 98104
Ernest M. Burgess, M.D.

VAH Seattle Amputee Service

The Prosthetics Research Study staff has maintained an active relationship with the clinical services at the VAH, Seattle, Wash., and at its Prosthetic Treatment Center. The inpatient amputee service is under the direction and supervision of the PRS staff. This staff includes three attending surgeons and a research physical therapist who is based at the VAH, Seattle, Department of Physical Medicine and Rehabilitation. Research prosthetic service and technician assistance are also provided to the Veterans Administration Hospital, as required, for proper conduct of the Amputee-Prosthetic Service. A program of rounds each week with both the General and Orthopedic Surgical Services, and occasionally the Rehabilitation Medicine Service, is conducted. Our staff also participates in the twice monthly amputee discussion sessions, which provide an on-going educational service for inpatient and outpatient amputees.

During the time interval covered by this report, 39 amputation procedures were performed by or under the direct supervision of PRS surgeons; 145 rigid dressing changes were carried out; and 8 patients were treated by the Controlled Environment Treatment system. The readily available inpatient consultation service provides a valuable liaison between the study group and the clinical personnel at VAH.

Prosthetic clinics are held 3 times per month at the Prosthetic Treatment Center, VAH. During the 6-month period, 185 outpatients were assessed for various prosthetic problems. Time is allotted at these clinics and on inpatient rounds to give all physical therapy students affiliated at VAH an opportunity to work with and to learn about amputees. Time is also spent with residents on the Rehabilitation Medicine Service. Visitors are welcome and are in frequent attendance at the clinics and at the inservice rounds.

The PRS-Moore Load Cell continues to be evaluated by our physical therapy staff at the hospital.

Some experimental work has been performed in *residual limb muscle training,* using either biofeedback or a modified pressure cuff. Records on research patients are kept both at VAH and at PRS.

Amputee Discussion Groups

A patient discussion group was initiated in June 1976. The main goal was to bring patients together in a semi-social setting to exchange information concerning prostheses, surgery, and amputee life, as well as how to cope with the general hospital system. Additional goals were to help alleviate patients' feelings of helplessness, isolation, and depression, and to facilitate staff awareness of psychosocial factors which influence patient rehabilitation.

The group, arranged and coordinated by the physical therapist, meets for 1 hour twice a month. All inpatients, and those outpatients who can, are encouraged to attend, verbalizing their opinions and suggesting topics of discussion. Different speakers are arranged for each session, and these have included physicians, nurses, physical therapists, occupational therapists, prosthetists, social workers, recreational therapists, and other amputees. Topics have included peripheral vascular disease, diabetes mellitus, prosthetic fabrication, care and cost of prostheses, diabetic foot care, residual limb management and pain, driver training, psychosocial adjustment, sex, sports and recreation. Several movies designed for patient viewing have been used. Approximately 10 to 15 patients attend, and because of their positive reactions, we plan to continue the meetings.

Functional Capabilities Survey

The aims of the functional capabilities survey were to obtain information directly from the patients on activities generally considered essential for daily living, vocational and extra-ambulatory activities, living arrangements and adjustments in them, as well as feedback on what professionals in the rehabilitation field should be doing to maximize the amputee's lifestyle. We also attempted to ascertain what relationship level of amputation, age, and cause of amputation had to patient rehabilitation achieved.

Controlled Environment Treatment

Our preliminary evaluation of 20 below-knee amputations managed postoperatively with Controlled Environment Treatment (CET) has been submitted for publication. To date, we have utilized CET in 32 cases and presently continue to study this system of management as an alternative to the Immediate Postoperative Prosthesis Management (IPPM) and as a means of edema control.

Patients managed with either postoperative method undergo $Xenon^{133}$ testing to assess skin blood flow in the ischemic limb. Those cases utilizing CET provide additional information by means

of a small strain gage sutured adjacent to the operative site, which continuously reflects and records fluctuations in residual limb volume. These data, in addition to clinical observations of wound healing progress, levels of pain, and rehabilitation, constitute the second phase of this study.

We have recently allocated a CET unit to Harborview Medical Center, affiliate of the University of Washington School of Medicine, Seattle, to evaluate its use in treatment of severely traumatized limbs. A smaller version of the CET, the MACE, has been developed by PRS and loaned to Dr. Frederick A. Matsen, III, at the University of Washington for basic animal research of pressure/circulation relationships in skin and muscle. Results of these studies will enable us to establish optimum CET pressure/time cycle parameters in clinical application.

In October 1976, PRS met with representatives of the British CAPE Engineering Company to discuss our clinical experience with CET as a partial basis for its use once it becomes commercially available.

Modulated Air Controlled Environment (MACE)

We have designed a unit, MACE (Modulated Air Controlled Environment), in an effort to reduce the size, weight, and cost of the CET system without compromising its efficiency. This unit is one-sixth the size of the CET. It does not have nor need the sterile environmental capabilities of the CET. The MACE unit was evaluated by the local N.F.L. football team of which seven players with various knee and ankle sprains were treated. Only one player reported negligible results in reduction of edema, while the remainder had an estimated 25 to 75 percent reduction in edema. Further evaluation and modifications of the equipment will be conducted in the coming year.

Rancho Edema Control System

Rancho Los Amigos Hospital, Downey, California, has been working on a project similar to the MACE; i.e., the Rancho Edema Control System. We are presently evaluating four units and have submitted preliminary reports to VAPC, New York, and to Rancho Los Amigos Hospital.

Xenon^{133} Testing

Lower limb skin blood flow research, as it relates to amputation level determination, continues at PRS with the assistance of the University of Washington, Department of Bioengineering. To date, radioactive Xenon^{133} has been administered intracutaneously to

19 below-knee amputees. Comparison and evaluation of pre- and post-operative flows in the first 20 cases are to be reported in a forthcoming publication jointly prepared by PRS and the University.

Strain Gages Monitor Surface Skin Tension

The strain gage application was specifically designed to evaluate the efficacy of CET in edema control. A miniature split proving ring with strain gages allows a record to be made of surface skin tension between two sutured points. A pilot study has indicated that there is a distinct increase in residual-limb pressure, occurring a few days postoperatively, and then a decrease over the next 7 days to a nonmeasurable pressure. Continued evaluation is being carried out in conjunction with the CET program.

Electrospinal Instrumentation (ESI)

PRS is one of 18 centers in the United States, Canada, and Sweden involved in the evaluation of Electrospinal Instrumentation (ESI) for the correction of scoliosis. Working with Dr. Walter Bobechko of Toronto, Ontario, Canada, and Medtronic, Inc., Minneapolis, Minnesota, we have implanted units in two patients. While there has been no dramatic correction of the scoliotic curve, neither patient has progressed to the point where further corrective surgery is deemed necessary.

Neuromuscular Assist (NMA)

PRS has not been actively involved in the NMA program since the termination of CPRD. However, recently, one of our six patients required replacement of his implant device; there was no problem encountered in the replacement procedure, and the explanted unit was returned to Medtronic, Inc., for evaluation of the failure. It should be noted that the patient would not consider anything but replacement of his implant unit; he would not consider returning to an external mechanical orthotic device to correct his drop foot.

Functional Electrical Stimulation

Surface stimulation for muscle retraining continues intermittently. Six new patients have been treated. Diagnoses include four hemiplegics, one Erb's Palsy, and one hand problem of unknown etiology. Four of the six patients continue to use the stimulator, with some subjective improvements in function. One patient discontinued stimulation because of increased pain directly related

to stimulation. The sixth patient expired secondary to other medical problems shortly after stimulation was initiated.

Transcutaneous Nerve Stimulation (TNS)

Transcutaneous nerve stimulation has been utilized to relieve a variety of pain problems in 26 cases. Twenty of these patients had phantom or residual limb pain; the remainder were treated primarily for acute joint discomfort. This method appears to be useful in controlling these types of pain.

TNS has recently been widely reported in the literature. Therefore, PRS will continue a long-term followup on the present amputee patients rather than accept additional new patients in the study.

PRS-Moore Load Cell

VA Prosthetics Center, New York, has placed an order for 25 load cells to be evaluated at various centers throughout the United States. Centers are presently being selected, and an evaluation protocol is being outlined. As an ongoing project, we are still considering reduction of size, weight, and cost of the unit, without sacrificing reliability.

Physiological Suspension

Muscle stabilization in amputation surgery, as advocated and utilized by Prosthetics Research Study since its inception, is a viable concept which provides a functional end organ to interface with the prosthesis. Certain below-knee amputees have been observed to have the capability of facilitating suspension of a prosthesis with their residual limb musculature. This capability potentially affects amputation surgery, prosthetic design, and rehabilitation.

Photogrammetry, EMG, and pressure-transducer readings, evaluating the muscle activity occurring during the gait cycle, were completed in six patients. X-rays taken under dynamic conditions demonstrated muscle bulk shift and residual-limb/socket displacement. Assimilation of muscle activity data is continuing at PRS, and a preliminary report on our initial evaluations is nearing completion.

Functional and Stress Analysis of Lower-Limb Amputees Performing Extra-Ambulatory Activities

In cooperation with Drs. Doris Miller and Robert Hutton of the Department of Physical Education, University of Washington, the performance of a number of young lower-limb amputees treated by the PRS staff have been analyzed, using computerized force-

plate studies and multiple exposure photography. These evaluations were carried out with the amputee performing extra-ambulatory functions; i.e., running, jumping, and participating in sports (water and snow skiing, golf, etc.).

The purpose of these studies is to determine the functional capabilities of amputees using standard prostheses, and to study the stress levels and force action parameters to which the prostheses are subjected. Valuable information is forthcoming relative to—

1. The functional capabilities of amputees in high-level performance, particularly involving sports;
2. A critical analysis of the ground-reaction forces involved in the performance of these specific extra-ambulatory functions;
3. The role of training in developing and improving performance; and
4. Prosthetic function, durability, engineering, component, and alignment parameters, relative to extra-ambulatory activities.

The value of this information as it relates to amputation surgery, and to postsurgical treatment including training and prosthetics, is substantial. The amputee population with which we deal has evidenced intense interest in these ongoing clinical studies.

Publications

1. Kegel, B.: Controlled Environment Treatment (CET) for Patients with Below-Knee Amputations. Physical Therapy, 56(12):1366-71, December 1976.

Below-Knee Amputation with Immediate Postoperative Fitting of Prosthesis

VA Hospital
4150 Clement Street
San Francisco, California 94121
Wesley S. Moore, M.D., Albert D. Hall, M.D., and Leigh A. Wilson

No progress report was submitted by this contractor for this report period.

Interdisciplinary Development and Evaluation of Externally Powered Upper-Limb Prostheses and Orthoses

Applied Physics Laboratory
The Johns Hopkins University
8621 Georgia Avenue
Silver Spring, Maryland 20910
Woodrow Seamone and Gerhard Schmeisser, Jr., M.D.

During the latter portion of 1976, research at Johns Hopkins continued to be focused primarily on evaluation and modification of the experimental powered medical manipulator/worktable system. In addition, by prior agreement, a third powered medical manipulator/worktable was completed and delivered to the VAH, West Roxbury, Massachusetts, for further clinical evaluation.

Observation and followup on the clinical performance of externally powered above-elbow and shoulder-disarticulation prostheses fitted in previous years was continued.

Powered Medical Manipulator

The experimental model of the powered medical manipulator previously described in BPR 10-24 and 10-25 has now undergone 2 years of evaluation including over 1 year of clinical evaluation by a high-level quadriplegic. This individual uses this system for a few hours per day to carry out vocational and personal tasks and finds the unit to be of value in his activities of daily living. The arrangement of the equipment relative to the subject in bed is shown in Figure 9. During this reporting period some additional features have been incorporated into the system. They include the following:

1. *New Terminal Devices*

The original manipulator used a Dorrance VO-555 terminal device for grasping purposes. While adequate for many purposes, it did not provide a secure grip for handling magazines and books.

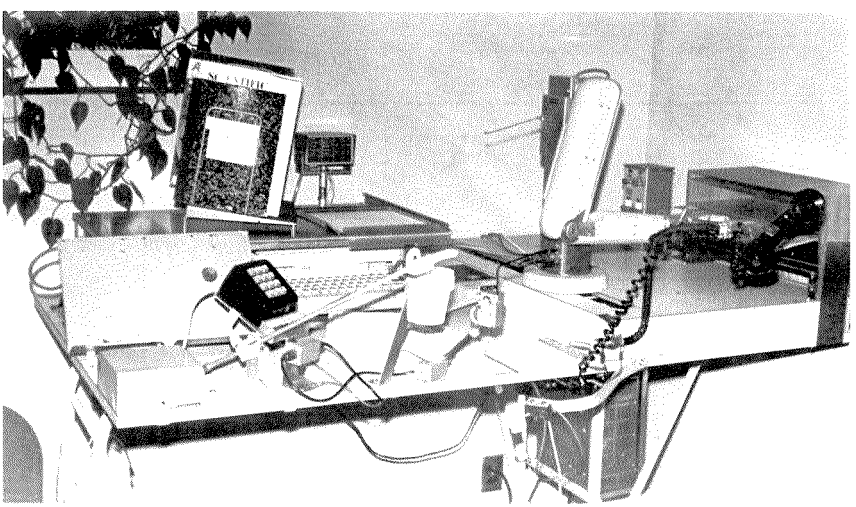

FIGURE 9.—Manipulator/worktable: arrangement of components.

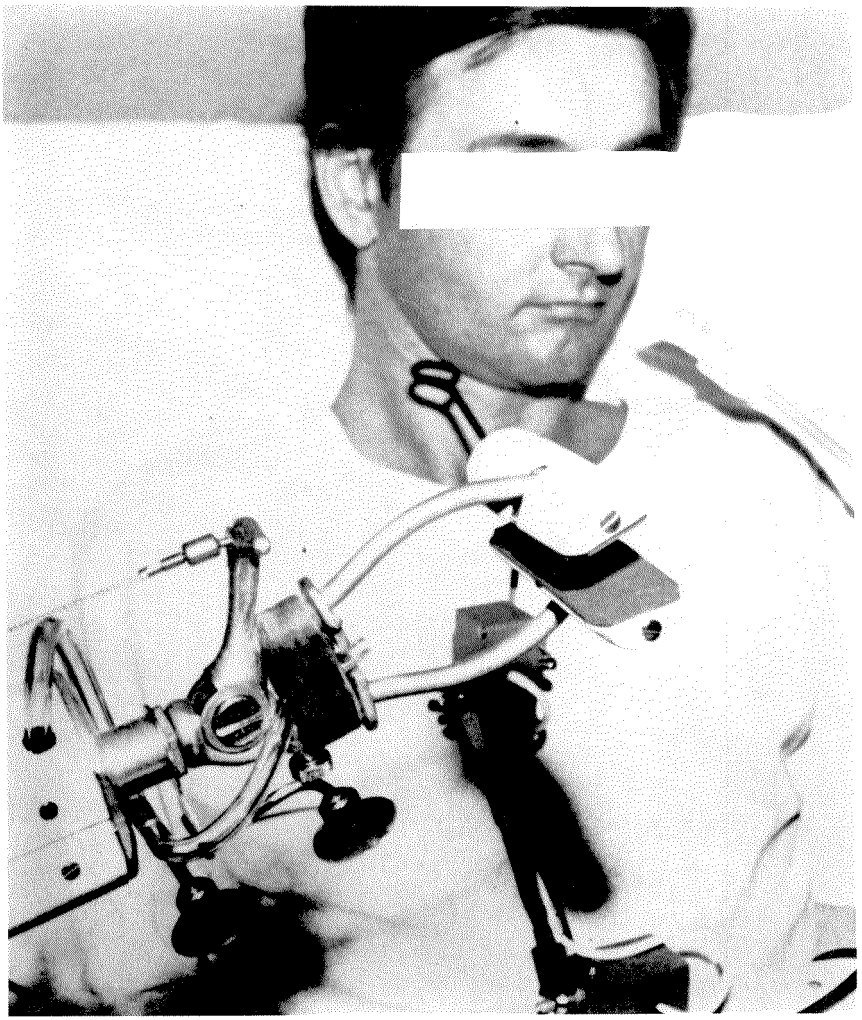

FIGURE 10.—Modified terminal device.

A new terminal device arrangement, shown in Figure 10, was designed to increase the area of the grasping surface. This design proved superior for the purpose and was incorporated into the system for patient testing. The quadriplegic now has used this device for more than three months and finds it very satisfactory.

2. *Eyeglass Control Mode*

The experimental model of the manipulator has been modified to allow eyeglass control of the discrete or pulse commands re-

FIGURE 11.—Eyeglasses used to mode-select manipulator motions. A sensing accelerometer is located on the eyeglass frame.

quired to select each mode of operation. A sensing accelerometer is located on the eyeglass frame (Fig. 11) and pulse commands are generated by "teeth-clicking" modes. The test subject finds this means of control easy to use, with minimal false signal inputs. (The alternate method of pulse input utilizes a microswitch located over a suitable muscle—the test subject prefers the eyeglass mode of control to the microswitch because of occasional muscle spasticity.)

3. *Self-feeding Arrangement*

One of the important features of the powered medical manipulator is its capability for allowing self-feeding by the patient. In order to facilitate this task, three modifications have been made to the system:

a. *Redesigned Eating Utensil.*—A new eating utensil, shown in Figure 12, was designed to simplify the mechanics of self-feeding. It interchanges directly with a removable portion of the special terminal device. The mechanism geometry allows good scooping action at the plate and the spoon remains reasonably horizontal between the plate and mouth.

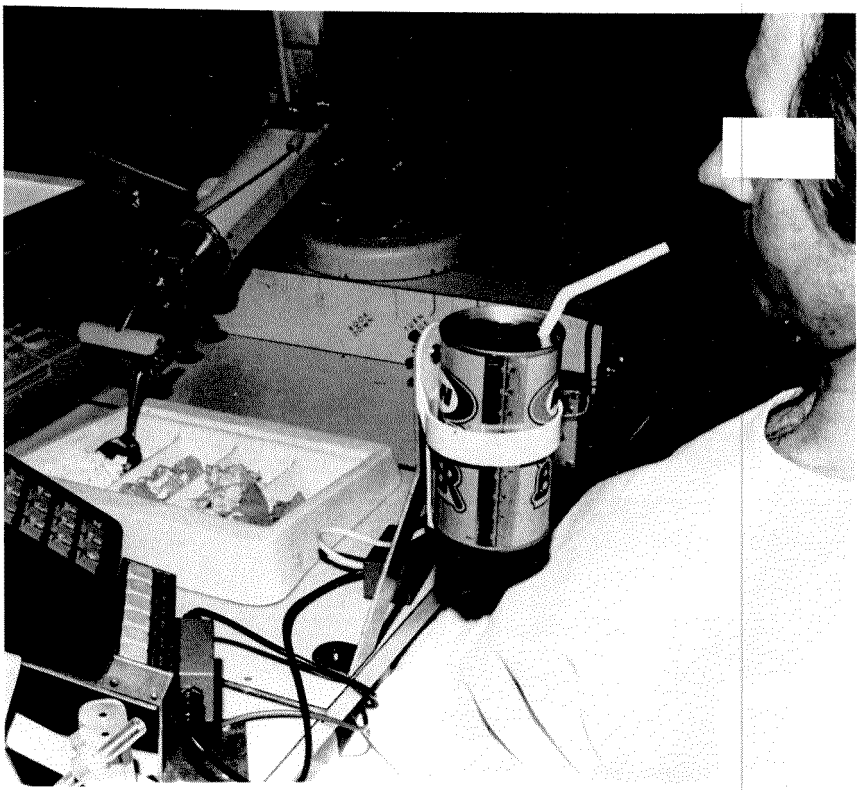

FIGURE 12.—Special utensil and compartmented plate for use with the manipulator.

b. *Special Compartmented Plate.*—During the early trials of self-feeding, it was apparent that the shape of an ordinary dish and interaction between the spoon and the food made the self-feeding task very tedious. A new plate was designed and constructed with compartmented areas to facilitate scooping of the food. This is also shown in Figure 12. Self-feeding has been demonstrated to be significantly improved by the use of this plate.

c. *Sequence Program Mode.*—In order to minimize input commands in the eating sequence, portions of the trajectory have been automated with hardwired logic. This has significantly reduced the control effort required to eat a meal. The subject reports that self-feeding is now easy and practical with this machine. Future developments described below will further simplify this activity.

Advanced Powered Medical Manipulator with Microprocessor Control

A new manipulator/worktable arrangement is under construction to further simplify the interface between the subject and the machine. This new manipulator will be controlled by a microprocessor in deterministic portions of trajectories but will still permit manual control at the end points and allow override at any time. Such a systems concept allows manual control flexibility when needed, yet utilizes automation for routine aspects of control, thus minimizing sequential inputs from the subject. The automation of the manipulator can be done at low data rates as motions are sequential, an ideal job for a microprocessor.

The design functional requirements for the microprocessor are to—

1. Control the motion of all six degrees of freedom;
2. Monitor the positions of all six degrees of freedom;
3. Be capable of initially executing four programed sequences with expansion capability to 100 sequences;
4. Drive the display readouts; and
5. Do signal processing from discrete and linear input commands from the patient.

General requirements for the selection of the microprocessor hardware for this system included—

1. Low parts count,
2. Complete computer with memory on one board (preferred),
3. Low power requirement,
4. 8-bit arithmetic capability, and
5. Versatile firmware monitor program for debugging.

Interface capability requirements for selection of the microprocessor hardware included—

1. Single channel 8-bit digital-to-analog converter,
2. 8-channel 8-bit analog-to-digital converter,
3. Serial output channel,
4. Two level interrupt, and
5. Teletype.

The Choice—The selection process resulted in the choice of a Mostek F-8 Evaluation Kit with the following characteristics:

1. Four 8-bit I/O ports,
2. Total computer board size with 1K byte memory is 6.75 in × 5.5 in,
3. Total computer power consumption is 5.2 W,
4. 64-byte scratchpad memory,

5. Two real-time clocks,
6. Two external interrupts,
7. 110 and 300 baud (pulses-and-spaces/sec.) interface, and
8. Powerful monitor for debugging.

The computer software is being developed using the APL-developed universal cross assembler package on the IBM 360/91. The computer and power supply have been assembled and all peripherals (display, A/D, D/A) have been interfaced. The software has been written and checked out for those peripherals. Initial tests with the computer driving the manipulator should commence during February 1977. The complete manipulator system is expected to be in clinical testing by late Spring 1977.

Manipulator Unit for VA Hospital, West Roxbury, Massachusetts

On November 10, 1976, a prototype manipulator/work table system was delivered to the VAH, West Roxbury, and its operation demonstrated to members of the VAH staff. It is hoped that clinical testing will include a large number and variety of subjects in order to extend the manipulator's functional capability and task applicability to meet the needs and desires of as wide a range of subjects as possible. Clinical evaluation protocol is being developed and subject evaluation is expected to commence early in 1977.

Continued Evaluation of Externally Powered Upper-Limb Prostheses

Clinical followup is continuing on externally powered upper-limb prosthetic systems previously developed under this program. Of the 15 experimental prostheses fitted to 13 amputees between January 1970 and January 1974, 2 are still in daily functional use and are considered by the users as essential in their vocational or avocational activities; one is now 6 years, the other 4½ years after original fitting.

Over 43 man-years of in-use field trial test time have now been accumulated with these 15 experimental prostheses.

Four of the 15 prostheses are retained by the users for occasional use—merely for cosmesis or to assist in some uncommon but necessary bimanual activity. Therefore, these four are no longer counted in the total accumulated field test time. Of the remaining nine units, one above-elbow prosthesis has been recently modified to provide live lift capability to avoid dropping objects during elbow flexion. This unit is being returned to the test subject for further field evaluation. Six of the 15 units were returned after being in regular use for periods in excess of 1 year. They were returned due to a variety of factors, as reported in BPR 10-25.

The remaining two were barely used at all and were retrieved within a few months of delivery. These two were fitted early in the program while subject selection criteria were relatively unrefined and the electrical power and control units were less satisfactory.

Development and Evaluation of Advanced Automotive Adaptive Equipment[a]

Bioengineering Program
Texas A&M University, College of Engineering
College Station, Texas 77843
Make McDermott, Jr., Ph. D., and Lewis A. Leavitt, M.D.

Introduction

The basic intent of this project has been to develop and evaluate automotive adaptive equipment to meet the needs of those disabled who are not served by currently available standard automotive equipment. This effort required solution to the problems of entry/exit, seating/restraint, driver control systems, and additional safety features, so that persons with low levels of physical functional ability (e.g., quadriplegics) could attain a measure of mobility by way of independent automotive transportation. Included in the plan of work were:

1. Analytical efforts in the areas of human engineering and systems safety;
2. Evaluation and testing efforts on new equipment rapidly becoming available, such as wheelchair lifts and restraints, and servo and secondary control driving systems;
3. Development of official government standards for the various types of adaptive equipment.

I. Wheelchair Lifts

A test plan was developed for the orderly and standardized evaluation of all available wheelchair lifts. This evaluation was based on—

1. The ability of a lift to be installed and operated according to the manufacturer's instructions and claims;
2. Adherence to accepted engineering design and fabrication practices;
3. Systems' safety features and shortcomings;

[a]This summary covers the period July 1, 1975, to November 30, 1976, under VA contract V101(134)P-335.

4. Identification of potential user errors and possible results; and
5. Ease and convenience of use by handicapped users having various capabilities.

The evaluation[b] involved the following methods: 1. Engineering evaluations of the design and fabrication aspects of the lifts; 2. Physical measurements of the lifts (length, width, height, and angular dimensions); 3. Acceleration measurements of the lift platforms during the various modes of operation; 4. Assessment of load lifting capacity; 5. Evaluation of noise levels of the lift drive units; 6. Evaluation of lift actuating controls; 7. Evaluation of occupant actions, errors, and hazards; and 8. Accelerated lift cycle testing. The evaluations were done by the engineers and technicians assigned to the project, but also four quadriplegics were utilized in the evaluation of occupant actions, errors and hazards.

The following lifts were evaluated:

1. Braun Corp., 1014 S. Monticello, Winamac, IN 46996
2. Casady Safety Van Lift, 1627 Linnea Ave., Eugene, OR 97401
3. Collins Industries, P.O. Box 58, Hutchinson, KS 67501
4. Compass Industries, Inc., 715 15th St., Hermosa Beach, CA 90254
5. Helper Industries, Inc., 832 N.W. 1st St., Ft. Lauderdale, FL 33311
6. Maxon Industries, Inc., 1960 E. Slauson Ave., Huntington Park, CA 90255
7. Para Industries, Ltd., #6-4826-11th St., N.E., Calgary, Alberta, Canada
8. Ricon Corp., 15806 Arminta St., Van Nuys, CA 91406
9. Speedy Wagon Sales Corp., 2237 Harvester Road, St. Charles, MO 63301

The results of the evaluations of each of the above lifts were reported to the Veterans Administration in "An Evaluation of Commercially Available Wheelchair Lift Devices," November 20, 1975 (revised April 1976) by Duncan, Dean D. and McDermott, Make, Jr.

During the contract period, a first draft of a standard for lifts was prepared. The draft standard was based on information gathered from the evaluations, and from existing applicable industry standards such as those from the American National Standards Institute and the Society of Automotive Engineers. A rationale was

[b]The evaluations developed a comprehensive body of knowledge on wheelchair lifts from nine different manufacturers, and a data base for use in developing a standard for wheelchair lifts.

presented for each of the various requirements of the standard.

The wheelchair lift industry is a rapidly changing one. There are known to be some 20 to 25 different nationally advertised companies which manufacture and/or sell wheelchair lifts of a variety of designs. Some devices seemed to have been designed, fabricated, and then marketed with a minimum of test and evaluation on the part of the manufacturer—this is especially true with the newer companies. Many of the design/use deficiencies discovered during this evaluation program have already been corrected on later models of the lifts.

II. Testing and Evaluation of Driver Control Systems

The purpose of this program is to test items of advanced adaptive equipment to determine their effects on system performance and safety. The testing goes beyond the low-speed testing normally done during driver licensing tests in order to provide a more meaningful evaluation of these untried systems' safety. The tests involve the following regimes:

1. Long-term use—2000 miles under simulated urban and rural road conditions;
2. Low-speed maneuvers—a "driver training" course;
3. High-speed and emergency maneuvers—obstacle avoidance, braking, and curve negotiation.

The test program is complemented by a human factors (ergonomics) evaluation, a safety evaluation, and a failure-mode-effect analysis. Initial test operations involve a professional test driver and a driver drawn from the general driving population. Neither of these individuals is physically handicapped. Parts of the test are then repeated with spinal-cord-injured veterans (C-6/7 or higher lesion quadriplegics). The test protocol has the following specific purposes and objectives.

(From the Test Plan—)

Purpose

The purpose of this test is to conduct an integrated and comprehensive evaluation of an adaptive control setup installed and operative in a motor vehicle.

The test protocol will comprise preliminary configuration checks, a human factors and safety evaluation of the control devices in place in the motor vehicle, and a composite 2000 mile road test. The road test will simulate the range of highway operating conditions that might be expected to be encountered by a handicapped driver.

Objectives

This test has the following specific objectives:

(1) Assess the operability and workspace envelope of a candidate adaptive control system as installed in a motor vehicle.

(2) Assess the feasibility of the control system as an adaptive system prior to road use.

(3) Conduct a simulated highway use test comprising 2000 miles to determine long-term operability and the effects of the control system on vehicle handling.

The principal measurement made in the driving tests is the comparison of the vehicle and driver's performance as equipped with the adaptive control system vs. that performance attainable using the original equipment control system in the same or similar vehicle. Most of the performance data are in the form of trials to criterion, time to perform a maneuver, hits/misses or other variant of this, plus a rating by a qualified test conductor on an ordinal scale basis.

All test runs are made under the standard checkout and safety rules prescribed in the Test Plan, and are under the direct control of a Test Conductor designated by the project Co-Principal Investigators.

Work Accomplished in Contract Year

Three vehicles equipped with unconventional control systems have undergone testing during the contract year:

1. Harden-CCI (Creative Controls Inc.) Mode I throttle/brake servocontrol system.
2. Mobility Engineering and Development, Inc. (MEDI, Charles Scott).
3. Sevier Van (James Allen).

None of these installations was without deficiencies. These were reported to the developers for correction or re-design, etc.

The test plan is to compare road tests, vehicle evaluations, and handicapped driver performance evaluations with advanced servocontrol systems which have been debugged and which provide an objective framework for assessing the potential of other systems to assist disabled veterans to drive. We now have a standard routine for testing any control system which may be submitted to the VA for approval, and this routine provides the basis for a servocontrol system standard which must eventually be drafted.

III. Testing and Evaluation of Wheelchair Restraints

An effort was initiated during the current contract year to evaluate several commercially available wheelchair restraints designed for use by wheelchair-bound drivers or passengers. To this end a "Wheelchair Restraint Systems Test Plan Outline" dated June 1976 was written and submitted to VAPC. The objective of the testing was to determine the capability of commercially available wheelchair restraint systems for holding the wheelchair and occupant in place during vehicle motion. Specifically, the test plan considers the following:

1. Does the restraint accomplish its stated purpose?
2. Was good design and fabrication practice followed?
3. Actions and/or decisions required of the occupant and/or the attendant.
4. Possible errors by occupant and/or attendant.
5. Movement of wheelchair for forces from 0g to 1g (range of forces normally encountered during driving).
6. Movement, permanent deformations, and failures for load greater than 1g.

Seven restraint systems were purchased and tested and the following conclusions were reached. First: the wheelchair occupant should be restrained directly to the motor vehicle carrying the wheelchair, and not to the wheelchair. Second: do not clamp only the rear wheels of the wheelchair to the floor of the vehicle—if the wheels are so locked, then additional restraints must also be employed. And third: some types of restraints are not capable of withstanding longitudinal and/or transverse static loads equivalent to those imposed by the combined mass of the anthropometric dummy and wheelchair (274 lb) under accelerations likely to occur during normal (noncollision) driving conditions.

The ultimate goal of this project is to determine a set of requirements which restraint equipment must satisfy in order to be safe and of reasonable quality. The VA can then use these requirements in its standards program for prosthetics, orthotics, and orthopedic aids.

IV. Miscellaneous Activities

In the course of this year's activity a certain amount of effort has been expended in development of several concepts that contribute to our understanding of a handicapped driver's capability, or that provide guidelines to prospective designers of hardware to support the quadriplegic and other severely handicapped patients. This developmental effort has been low-priority, but fruitful in these three different areas:

1. *Driver Evaluation Device*—A special measurement device which can be used to measure the force capabilities of handicapped patients (and directly applied for prescriptive purposes) has been designed and built. The unit clamps to a table top and features a steering wheel which can be positioned to the approximate angle of tilt of a van or ordinary passenger car. The wheel is attached to a spring scale to measure static forces exerted by the patient while he holds the wheel. Both direction of force and hand position (or spinner position) can be varied.

Hand control force levels can be measured using this device. The forces are measured by means of an ordinary torque wrench which can be positioned to approximate any of the available hand-control input motions.

Two units have been built. One is in our laboratory at College Station, the other is in Houston at TIRR where it is being used by the occupational therapy group. This effort was documented in the report "Texas A&M Handicapped Driver Evaluation" dated August 1976.

2. *Wheelchair Restraint*—The wheelchair restraint system has been dubbed the "CLAMP" (Carrier Lock Automatic Mechanism for 'Plegics'). This unit can be mounted either on an electric wheelchair or on the floor of a vehicle. Two screwlock-operated claws engage a straight rod to provide positive two-point attachment of the chair to the vehicle. Lateral and angular displacement are minimized. It is worth noting that we have integrated a lap belt into the CLAMP-type wheelchair restraint in such a way that *the patient is tied through the restraint gear into the vehicle structure* rather than to the wheelchair itself.

3. *Secondary Controls Panel*—The Human Factors Group of TTI has also gone through a developmental design exercise on configuring a special panel for quadriplegics. The panel replaces or supplements the standard vehicle instrument panel. The panel or console is "lap mounted" and has controls and displays for gear position, lighting, turn and hazard signals, parking brake operation, horn, wipers, washers, and ignition/start.

The panel has been mocked up, and will be translated into a working prototype in the next period of activity in support of the Secondary Control System evaluation effort. This effort was documented in the report "Conceptual Design of an Adaptive Secondary Control System Panel" dated March 1976.

Control of an Artificial Upper Limb in Several Degrees of Freedom

Department of Electrical Engineering
Colorado State University
Fort Collins, Colorado 80523
Daniel Graupe, Ph. D.

During the second half of 1976 the main emphasis of this work was, as in the preceding 6 month period, on the EMG controlled prosthesis. Specifically, work has continued on speeding up the microcomputer algorithm such that limb actuation can be accomplished within the required 0.15 to 0.2 s, using our EMG identification and recognition algorithm (1,2) on an Intel 8 Mod 80 microcomputer system in real time and with double precision (i.e., with 16-bit words instead of the standard 8-bit words). Another major aspect of the work during the period covered by this report was concerned with enhancement of reliability of the system, noting that such enhancement requires additional computation and, therefore, the solution of the computational speeding-up problem is a prerequisite to the reliability enhancement problem. Finally, amputee tests were performed during the period to check speed and reliability in real time and with real microprocessor hardware.

Concerning the enhancement of computational speed, further work was done on our parallel filtering algorithm (2) which facilitates limb actuation during normal usage without continuous re-identification, so that the lengthy identification algorithm is called for only at the calibration mode. This work has led to the overcoming of previous identification biases occurring with parallel filtering, by the use of certain modifications of the algorithm which followed theoretical studies. When these modifications were completed, they resulted in an algorithm which not only met the speed requirements for actuation within 0.15 to 0.2 s, but that also outperformed, in terms of both actuation accuracy (reliability) and speed, all other speeded-up algorithms of our basic version. This is indicated by Table 1, which gives results of actual on-line microcomputer amputee tests.

Observing Table 1, it is obvious that further enhancement of reliability could be expected by increasing the number of AR (autoregressive) model parameters from 3 to 4 (compare, say, experiments No. 3 and No. 6 in Table 1 where only the number of AR parameters is different). Consequently, work has been initiated on rewriting the algorithm of experiments No. 7 and No. 8 of Table 1 for 4 AR parameters. It is noted that this modification affects only the Calibration mode (in terms of computational speed), so no additional actuation delay should result.

TABLE 1.—*Amputee Tests (Performed on Intel 8 Mod 80 Microcomputer at Double Precision) 1976*

Experiment number	Identifier	Length of data record	Reference parameters	Number of functions considered	Function discrimination	Approx. accuracy	Actuation delay (sec.)
1	Seq. least Sq.	200	3 AR + Var.	4	Vector space	85%	1.3
2	Seq. least Sq.	200	3 AR + Var.	3	Vector space	95%	1.3
3	Gradient Desc.	200	3 AR	3	Vector space	65%	0.25
4	Gradient Desc.	400	3 AR	4	Vector space	65%	0.30
5	Gradient Desc.	400	3 AR + Var.	3	Vector space	85%	0.30
6	Gradient Desc.	400	4 AR	4	Vector space	70%	0.35
7	Seq. least Sq.	400	3 AR	2	Parallel filtering	85%	0.15
8	Seq. least Sq.	400	3 AR	4	Parallel filtering	80%	0.20

Further speed enhancement is expected when the newly acquired hardware multiplier system, which is also of a longer word length, is finally incorporated. (This incorporation was delayed due to malfunction of interface hardware.)

Therefore, although the basic speed and accuracy requirements have already been met, further enhancements are expected during the next phase of our work when the new 4-parameter algorithm is complete and when the new hardware multiplier is operational. This will permit introduction of the now-missing speed control, which requires additional computation (and thus additional computational delay, not tolerable presently) and an additional load on the discrimination algorithm (not tolerable so far, due to effects on accuracy). Obviously, with additional improvements in speed and in reliability, objections to speed control should no longer be valid.

It is important to note that a further speeding-up of computation, and therefore further enhancement in reliability (reliability being linked to computational speed since higher reliability implies that more parameters are to be identified, and thus, longer computation), is possible when faster microprocessor systems are used. Such systems are now available (MIPROC 8, etc.), but were not available when our Intel 8 Mod 80 microcomputer system was purchased for this project.

Furthermore, all conclusions derived from this work are fully and directly applicable to any other microprocessor hardware. Hence, the changing of the hardware is not recommended, especially when considering the very dynamic microprocessor hardware market where last month's hardware is considerably surpassed by this month's.

References

1. D. Graupe and W. K. Cline: IEEE Transactions on SMC, pp. 252-259, March 1975.
2. D. Graupe, J. Magnussen, and A. A. M. Beex: Proc. IEEE International Conference on Cybernetics and Soc., Washington, D.C., pp. 680-685, 1976.

Acceleration of Bone Healing by Electrical Stimulation

Castle Point, N.Y., VA Hospital, and
Helen Hayes Hospital, Biomechanics Unit
Route 9-W, West Haverstraw, New York 10933
George Van B. Cochran, M.D.

During the previous contract period at St. Luke's Hospital, a model for a stable non-union in canine bone (ulna) was developed and initial trials of electrical stimulation by pulsed and continuous

currents were conducted. This study, reported elsewhere in detail,[a] was the first to be initiated as an attempt to create bony healing over a large (2cm) defect in a long bone.

Although only partially successful in its primary aim, the prior investigation highlighted several important questions concerning electrical stimulation of bone healing. A method for determining presence of bone formation by means of electrical impedance measurements also was developed.

Work under the present contract, recently begun at VAH, Castle Point, will extend the prior study to determine the relative importance of current density, current characteristics during the "off" segment of pulsed stimulation, and electrode position in relation to pre-existing bone or marrow as factors in facilitating a stimulatory response adequate to produce clinically significant bone healing of large osseus defects.

Hemodynamic Evaluation of Postoperative and Preoperative Amputees

VA Hospital
Castle Point, New York 12511
Bok Y. Lee, M.D., F.A.C.S., Frieda S. Trainor, Ph. D., David Kavner, D. Eng., John L. Madden, M.D., F.A.C.S., and Emilio Ejercito, M.D.

During the 6 month period, 48 new patients with peripheral vascular disease and three patients who had been followed over a period of 5 to 10 yr were admitted to the Surgical Service. Immediately after admission, each patient was evaluated in the Vascular Clinic-Laboratory where patients were given a battery of tests designed to assess their vascular status. On the basis of results obtained from Doppler pressure studies, skin surface temperature, arterial and venous impedance plethysmography, noninvasive electromagnetic flowmetry, and arteriography and venography when indicated, the appropriate treatment of the patient was determined.

Thirteen of the patients had lumbar sympathectomy procedure. All of these reported relief of their symptoms and are being followed in the Vascular Clinic-Laboratory. Three of the 13 patients had had impending gangrene which disappeared following sympathectomy.

[a]Cochran, G.V.B., Derman, R.M., and Palmieri, V.: Determination of Effects of Electrical Stimulation on Healing of an Experimental Model for Non-Union in Canine Bone, P13.9 Proc. 29th A.C.E.M.B., Boston, Massachusetts, November 6-10, 1976.

The three long-term followup patients included—

1. An elderly male with diffuse arteriosclerotic occlusive disease and an above-knee amputation, who had returned to the clinic for revision of the stump;

2. A 55-yr-old man who 7 yrs ago had a sympathectomy and a thromboendarterectomy procedure performed for impending gangrene. This was still quite suitable; however, the contralateral side now showed progression of the arterial disease. A lumbar sympathectomy relieved his present symptoms.

3. A 58-yr-old diabetic with arteriosclerotic occlusive disease who had had a lumbar sympathectomy and femoropopliteal bypass graft 5 yr earlier; he returned to the clinic with a true aneurysm of the graft. This graft was replaced with the new umbilical vein graft procedure.

For two severely involved patients with arteriosclerotic occlusive disease and gangrene, the only choice was amputation above the knee. One other patient presented with toxic gangrene of the foot; following vascular tests a long below-knee amputation was performed. The patient is now using a prosthesis.

A 55-yr-old male was admitted to the clinic with superficial gangrene of the toes of one foot secondary to peripheral vascular disease. Gangrene was precipitated by exposure to severe cold and resultant frostbite. A lumbar sympathectomy was performed and within a few months only the tips of two toes were lost. The patient left the hospital with both limbs and is ambulating well.

An 85-yr-old male was admitted with arteriosclerotic occlusive disease and bilateral popliteal aneurysm. Unilateral severe deep venous thrombosis was detected and the same limb showed severe black discoloration over the anterior portion of the foot. With appropriate anticoagulation and repair of the bilateral aneurysms, which restored pulsatile flow to the lower limbs, amputation of the toes was necessary on one foot only. The patient is home and ambulating well.

Of five new patients with severe ischemic pain at rest, all had lumbar sympathectomy and a bypass procedure:

1. A 60-yr-old male had a successful bilateral femoropopliteal bypass and has returned to work;

2. A 65-yr-old male had a successful axillo-femoral bypass but is deceased following a myocardial infarct;

3. A 72-yr-old male with severe arteriosclerotic occlusive disease had a good response to lumbar sympathectomy (however, his axillo-femoral bypass graft did not function);

4. A 59-yr-old male with severe arteriosclerotic occlusive disease had a bilateral sympathectomy. Because of poor runoff, the bilateral bypass procedure could not be performed and the patient is now a bilateral below-knee amputee.

5. A 52-yr-old male did not have relief of his pain following lumbar sympathectomy; tests completed in the Vascular Laboratory showed further progression of disease and the patient is now a candidate for aorto-femoral bypass graft procedure.

One 52-yr-old male with a 30 yr history of diabetes sustained an injury to one foot which subsequently developed into gangrene. Upon his arrival in the hospital, tests showed advanced small-vessel changes and severe arteriosclerotic occlusive disease. With control of the diabetes, the patient first had a lumbar sympathectomy; this was followed by an axillo-femoral-popliteal bypass with ultimate healing of the big toe and heel. The patient is ambulating well and has returned to an active life at home.

Three remaining patients each presented with a special vascular problem. The first was a 60-yr-old male with an abdominal aortic aneurysm. During his surgical procedure the Doppler instrument was used to assess the status of blood flow in the mesenteric artery, thus providing information as to the viability of the intestine. The second patient had a subclavian aneurysm and peripheral embolism causing ischemic symptoms in the hand: the aneurysm was resected and the embolism removed with restoration of blood flow to the hand. The third patient had had a cerebral vascular accident; he presented with impending gangrene of the paralyzed lower limb. Delayed thrombectomy salvaged his limb.

The 12 remaining patients all had venous disease. Use of the venous impedance plethysmographic test detected the presence of deep vein thrombosis which was then confirmed by venography. Appropriate anticoagulant therapy was then instituted and during treatment the patient's daily progress was monitored using thromboelastography and impedance plethysmography.

For every instance cited in this report, the decision for appropriate treatment of the patient was determined by the tests completed in the Vascular Clinic-Laboratory. During this 6-month period 740 patients were seen in the laboratory representing approximately 1075 test procedures. This 6-month experience again reinforces three important issues:

1. Patients must be encouraged to pay attention to their signs and symptoms and to seek help early when more can be done to alleviate a problem;
2. The vascular test procedures used in the laboratory provide the

surgeon with the necessary information for accurate treatment. This leads to quality patient care; and

3. Once a patient has had care he must continue to return to the Clinic-Laboratory for followup.

Maxillofacial Restorative Materials and Techniques

Maxillofacial Research
Temple University School of Dentistry
Broad and Montgomery Avenue, Philadelphia, Pa. 19122
James S. Schweiger, D.D.S., M.S., and John F. Lontz, Ph. D.

Cosmetic realism in facial prostheses is an indispensible feature of reconstruction for acceptance by the individual as a pleasing, unnoticeable replacement of the missing facial component. It ranks equally in importance with tactile quality of feel and compliance, which have to replicate as nearly as possible those of living skin and tissue (1).

Cosmetic matching is usually carried out as a skilled art highly dependent upon the subjective judgment of the artists, not without controversy over some of the nuances of visual sensation or response. However, to assure a uniform duplicative standardization, such as that currently being done in the replication of the stress-strain tensile profile, there is need for quantitative standardization of visual coloration in strict comparison and replication of the human skin and living tissue. Such standardization requires spectral measurements (2). It has therefore been the object of this study to determine and apply quantitative numerical constants for the natural pigmentation of skin and living tissue, the intrinsic coloration due to hemoglobins, melanin, and carotene, to be duplicated by substituted, artificial, commercially standardized pigments. This concept and approach, while obvious and implicitly necessary, has not been approached in this manner according to any disclosure in the published literature.

To duplicate or approximate the natural, intrinsic, sub-dermal pigmentation in its dispersive, aggregative, and reticulated form as venoarterioles, lipoglobules, etc., the procedure has been to measure the principal spectral reflections. This can be done either by continuous-line spectrophotometry (General Electric system) or by the separative, digital color difference (DCD) system devised by Hunterlab. The former has been utilized extensively in color analyses but provides only a graphic reading which it is impractical, generally, to express numerically as would be needed for commercial and other specifications. The Hunter DCD system, giving measurements in

numbers, adapts itself conveniently and preferentially for this study as it has for the quality control and identification of textiles, paper, paints, and even facepowders. The Hunter DCD system measures the total reflection (L); the red (+) versus green (−) as the (a) index; and the yellow (+) versus the blue (−) as the (b) index. With the numerical indices, the red (a) indicates the reflective intensity of the hemoglobin components in the skin and tissues, while the yellow reflective intensity accounts for the reflectance of the natural carotene, the principal subdermal pigments (along with melanin) which are to be replicated for the intrinsic coloration of facial prosthesis. The topical or extrinsic matching, along with characteristic skin blotches, can be applied by the artist-prosthetist, or through the application by the individual of an appropriately matched face powder.

Digital Color Difference Indices of Human Skin

Table 2 summarizes the measured DCD indices for reflectance (L), and for the red/green (±a) and the yellow/blue (±b) indices, along with the corresponding ratios to indicate dominance of the red (a/b) or dominance of the yellow (b/a) in visual sensations. Included also in Table 2 are DCD indices obtained with cosmetic hand swatches (from Number 4 to 16), which reveal considerable

TABLE 2.—*Hunterlab DCD Indices Measured with Human Skin (Dorsal)*

Substrate		Colorimeter Measurements				
		Reflectance (L)	(a)	(b)	(a)/(b) Ratio[a]	(b)/(a) Ratio[a]
Human skin						
Caucasian	Lightest	50.1	+ 2.2	+ 10.4	0.22	4.73
	Darkest	59.9	+ 8.6	+ 14.8	0.58	1.72
Negroid	Lightest	44.7	+ 9.4	+ 17.1	0.55	1.82
	Darkest	48.2	+ 10.2	+ 17.4	0.59	1.71
Cosmetic Hand Swatches (from Number 4 to 16)						
	Lightest	44.1	+ 4.6	+ 13.3	0.35	2.89
	Darkest	66.2	+ 9.9	+ 18.7	0.53	1.89

[a]The (a)/(b) ratio provides an indication of the dominance, or more pertinently the subdominant intensity, of the redness, such that when the ratio reaches 1.0 the two color sensations are in equal mono-spectral intensity. Conversely this applies to the yellowness with the (b)/(a) ratio. The mono-spectral intensity is preserved as the pure colorants related to the hemoglobin and the carotene components of living skin and its under (subdermal) layers.

discrepancy from the readings obtained with human skin of both races. In terms of the (a)/(b) and the (b)/(a) ratios, the Hunter DCD indices reveal also a marked difference between the Caucasian and the Negroid races, the latter having a higher redness factor presumably due to the fractional spectra in this direction contributed by the natural melanin.

Digital Color Difference Measurements for Artificial Pigments

Following the criteria of skin coloration already described, a series of commercial reds and yellows are being formulated with the standard polysiloxane (silicone) prosthesis formulation (1) in the form of concentrates containing precise amount of the pigments, from which intrinsically pigmented stocks can be prepared for making the prosthesis. Currently, these stocks are pigmented to accommodate two levels of intrinsic colorations for each of the two races. The intrinsic colorations are selected to provide from 60 to 80 percent of the DCD indices. The final extrinsic or topical coloration can be applied by the artist or prosthetist to match the individual's skin adjacent to the prosthesis.

TABLE 3.—*Selected Candidate Pigments for Intrinsic, Stable (3), Facial Prostheses*

Pigment	Industrial Identification	Hunter DCD Indices[a]		
		Redness + (a)	Yellowness + (b)	(a)/(b) Ratio
Red Group (partial, selected)				
Monastral Red	RT-759-D	44.9	12.4	3.62
Monastral Pink	RT-215-D	36.6	10.5	3.49
Magico Iron Oxide Red[b]	L-205-CS	34.2	17.4	1.97
Monastral Maroon	RT-792-D	28.3	12.4	2.28
Red Rayon Floc (1/32″)	(Claremont)	5.8	9.8	0.59
Yellow Group (partial, selected)				
Monastral Gold	YT-823-D	18.8	18.4	1.02
Magico Iron Oxide Brown[b]	422 L-71174	20.7	16.8	1.23
Yellow Oxide (Pfizer)[b]	YO-3087	14.8	34.4	0.43
Yellow Ochre (Winsor & Newton)		(1)	25.9	0.04
Carotene (Sigma Chemical)		10.6	16.1	0.66
Melanin (Sigma Chemical)		2.8	7.3	0.38

[a]Digital Color Differences (Hunterlab)

[b]Reasonably stable to acidic exposure but may be severely discolored by hygienic cleansing agents such as are used for dentures (Efferdent) or in laundry (Clorox), etc. The iron oxides may turn to ferric chloride which is intensely green (–a) and may give an undesirable, non-living coloration.

Presently, the concentrates are formulated to 10 percent pigment level as is done in industrial practice of coloring plastics and elastomers. For pigment-standardization measurements for the DCD indices, the concentrate is further processed at a level of 0.10 percent concentrate, which ultimately brings the precise pigment level to 0.01 percent level. Table 3 summarizes a select group of the two most prominant colorants, namely the red and the yellow, processed from the concentrate to the 0.01 percent level, which was accorded the designation as stock material for the intrinsically pigmented prosthesis.

The measurements of the digital color differences indicate an almost uniform, stepwise gradation from redness to yellowness, thereby providing a quantitative index for any one of the pigments for a combination that can be, by an appropriate calculation, formulated into a concentrate for use in making the stock material. This is precisely the manner by which the intrinsically colored prostheses are being made for a preference study now under way. The data in Table 2 point out that a high (a)/(b) red pigment and a low (a)/(b) yellow pigment should more nearly approximate the existing natural pigments in the skin, namely hemoglobin and carotene, respectively. It is surprising to note that carotene and melanin (the third principal component pigment in skin and living tissue) while nominally considered yellow and brown, actually show an appreciable amount of the spectral red reflectance.

This method of determining the DCD indices in processed concentrates and stocks is a continuing feature of this program, supplemented by projected investigations of intrinsic dispersion of the spectral indices using titania blended with the concentrate and hence the stock.

In view of the complex variations in the refractive properties of the physiological components in the skin and especially the tissues, this effort also includes the addition of organic modifiers, in this case polyisobutylene, which has an index of refraction differing from that of polysiloxane. Polyisobutylene is being studied as a tackifying agent to retain extrinsic colorations even by the simple powdering of cosmetic facial powders.

References

1. Schweiger, James W. and John F. Lontz: Bulletin of Prosthetics Research, BPR 10-23 Spring 1975, page 319. See also Lontz, John F., James W. Schweiger, and A. William Burger: Development and Standardization of Polysiloxane Maxillofacial Prostheses. Presentation at the Twenty-Second Annual Meeting, American Academy of Maxillofacial Prosthetics, November 1975, Williamsburg, Virginia.
2. Lontz, John F., James W. Schweiger, and A. William Burger: Standards of Color Matching—General Concepts for Pigment Selection. Presentation at the First Inter-

national Symposium for Facial Prosthetics, April 1976, Arnhem, The Netherlands.
3. Ibid, see Tables 4 and 5 summarizing the effect of actinic exposure and exposure to acidic vapors, respectively.

Permanently Attached Artificial Limbs

Southwest Research Insitute
8500 Culebra Road
San Antonio, Texas 78284
C. William Hall, M.D.

Introduction

Over the past several years, numerous designs of a permanently attached artificial limb have been designed for placement on the amputated tibia of Spanish goats. Criteria for future designs have been selected from past successes and failures and have been previously enumerated. (See BPR 10-25, pp 69-96, Spring 1976). To date, we have little to add to these criteria, with the possible exception of the method for skin penetration which is the subject of this report.

Previous reports have dealt with various methods for attaching the endoprosthesis to the bone; i.e., intramedullary, supracortical, and supraperiosteal (Fig. 13). Each of these methods used a direct skin-penetrating member coated with one of the skin-interfacing materials. Regardless of what material had been used for skin interfacing, the results eventually terminated in the skin retracting beyond the reach of the skin interfacing material. Best results had been obtained using nylon or Dacron velour as the skin interfacing material, and we had blamed the "growth phenomenon" for the eventual failure of these materials.

Briefly stated, the "growth phenomenon" of this theory is seen when a velour-covered skin-penetrating device has been implanted for several weeks or months. As healing occurs, basal cells attach themselves to the monofilament fibers of the velour. The physical-chemical attraction of each cell's protein surface appears sufficient to keep it at a particular locus on the fiber's surface. As the basal cell matures, it migrates toward the skin's surface—carrying with it the monofilament fiber. Since all the basal cells at a specific depth from the surface have approximately the same rate of maturation, a vector force is continually pulling the velour-covered device toward the surface. This causes the device to literally "grow" like hair, nails, etc. Hence, the term, "growth phenomenon."

A more critical evaluation disclosed that an elastic membrane covering a cylindrical object should have the membrane intact over the end of the cylinder. If a hole were placed in the membrane at

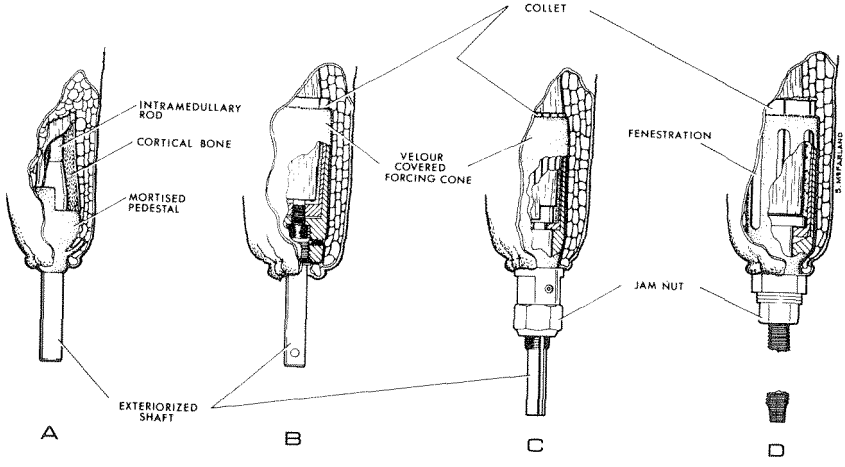

FIGURE 13.—The transition of the intramedullary rod to a supracortical and later to a supraperiosteal interfacing is shown in the above line drawing. All use a simple pylon exiting directly to the exterior. The intramedullary (A) method used a rod coated with such materials as porous alumina, porous polymethylmethacrylate, sandblasted stainless steel, sandblasted Vitallium® and stainless steel with bone cement. A morticed pedestal coated with nylon velour bonded to the intramedullary rod serves to stabilize the long axis against forces of torque and to anchor the skin through which it penetrates.

B, C, and D are similar, in that each has collets compressing either cortical bone directly or periosteum through a layer of interposed elastomer. A velour-covered forcing cone driven by a jam nut causes the forcing cone to compress the collets.

the end of the supporting structure (in this case, bone and the attached endoprosthesis), the elastic membrane retracts, allowing the supporting structure to protrude. Most surgeons have on occasion been witness to this when putting on a rubber glove with a small hole in the tip of one of the glove's fingers and having the surgeon's finger suddenly appear through the glove's fingertip.

It finally became apparent from these consistent failures that, no matter what interfacing material was to be used, the skin over the amputated stump's end should be left intact. This, of course, leaves one with a new problem, which is how to transfer the skeletal load to the exterior without going through intervening soft tissues (which would violate our first criterion for the development of a permanently attached artificial limb).

The Involuted Approach—A New Method for Percutaneous Skeletal Attachment

Adoption of the idea of closing the amputated end of the stump and yet transferring the skeletal load to the exterior dictated an

indirect approach. Placing the end of the bone in a basket or bucket supported at the lip by lugs would allow such a load transfer, provided that the lugs penetrated the skin some distance proximal to the stump's end and could be appropriately attached to an external pylon. Tracing the transmission of forces from the bone's shaft to the bottom of the bucket, then up the walls of the bucket to the lugs, and then down the pylon to the ground, shows the reasoning behind selection of the term "involuted."

Figure 14 shows the evolutionary development of this approach. A stainless steel basket having an elastomer inner liner allowed a "quick and dirty" look at this radical departure from the direct approach. Figure 15 demonstrates the surgical technique used for the current model. A trifurcated pylon is later bolted to the penetrating lugs.

The current model is an attempt toward simplification, both in fabrication and surgical placement of the device. Bone cement is currently being used to bond the bucket to the end of the tibia. To strengthen the surface adhesion, "pores" were made in the cortical surface using an alligator clamp.

Results

To date, seven of the stainless steel bucket devices have been implanted. Although all are surviving without apparent problems, it is too early to predict the ultimate fate of this method.

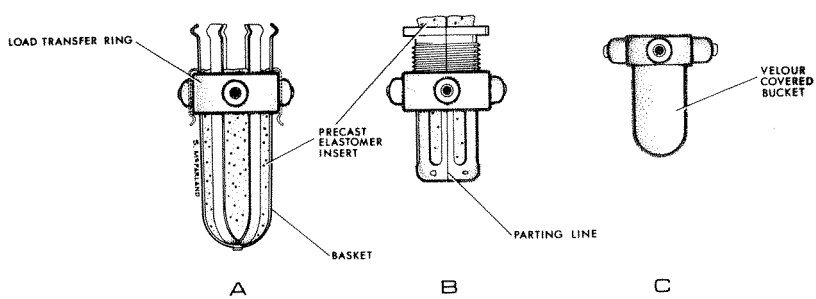

FIGURE 14.—Transition from the "quick and dirty" experiment using the "basket" approach (A), to the sophisticated but rather bulky supraperiosteal "clam shell" (B), to the simple stainless steel bucket (C) is depicted in the artist's drawings. Each of the above is an example of the indirect or involuted method of coming through the integument.

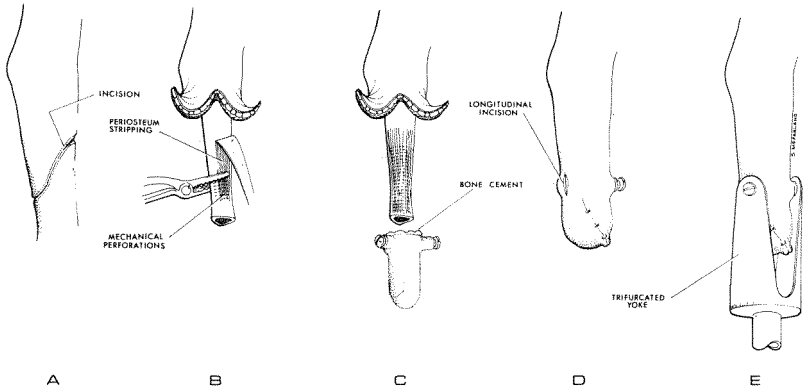

FIGURE 15.—(A). Simple below-knee amputation of the right hind limb of a Spanish goat inaugurates the indirect approach for direct skeletal attachment of a percutaneous endoprosthesis. After stripping the periosteum (B), the bone is mechanically perforated to enhance adhesion of the bone cement and rigidity of the bucket (C). Skin closure over the end of the bucket is similar to closure of any amputated stump. Small longitudinal skin incisions (D) expose the screw head for placement of the trifurcated yoke pylon (E).

Mobility Aids for the Severely Handicapped

Mobility Engineering and Development (MED), Inc.
6905 Shoup Avenue
Canoga Park, California 91306
Charles M. Scott and Ronald E. Prior, Ph. D.

For Progress during this report period, see the article, "Mobility Aids for the Severely Handicapped," appearing in BPR 10-26, pages 392-433.

In Vivo Loading of Knee Joint Replacement

Case Western Reserve University
Biomechanics Laboratory
Bingham Engineering Building
Cleveland, Ohio 44106
Richard H. Brown, Ph. D., Kingsbury G. Heiple, M.D., Victor M. Goldberg, M.D., and Albert H. Burstein, Ph. D.

No progress report was submitted by this contractor for this report period.

Research and Development Project on Advanced Orthotic Devices for Adult Paraplegics

Prast Research Associates
1094 Stony Point Road
Grand Island, New York 14072
Martin T. Prast

Lawrence E. Carlson, Ph. D.
University of Colorado
School of Engineering
Boulder, Colorado 80302

The PACO Concept

The PACO, an acronym for Pivot Ambulating Crutchless Orthosis, is designed to be one component of a complete mobility system for adult paraplegics. For short distances (50 m), the PACO unit provides mobility and upright support. To travel up to 1 km, a conventional wheelchair is an efficient, practical solution, while longer trips would necessitate a motorized vehicle (automobile or bus). The goals of the PACO system are to provide—

1. support and balance in an upright position without use of hands;
2. limited ambulation in the upright position;
3. unaided standing and sitting;
4. compatibility with wheelchairs;
5. a device that is easy to don and doff; and
6. easily adjusted by an orthotist for various patients.

The PACO concept was inspired by the 1970 development of the "Parapodium" for children at the Ontario Children's Centre by Wallace Motloch, who also developed the pivot walk method of forward locomotion. Pivot ambulation accomplishes forward locomotion through successive body rotations about vertical axes lateral to the feet (Fig. 16). The related swivel walking utilizes basically the same concept, with the soles of the feet being the respective points of rotation. In either case, the amount of forward progression with each step is a function of the lateral spacing between pivots and the angle of rotation.

Present State of Effort

PACO III was designed to retain the advantages of PACO II while satisfying all of the stated design goals. The first step toward independent standing was the design of wheelchair armrests which can be turned around so that they project forward of the chair. Tele-

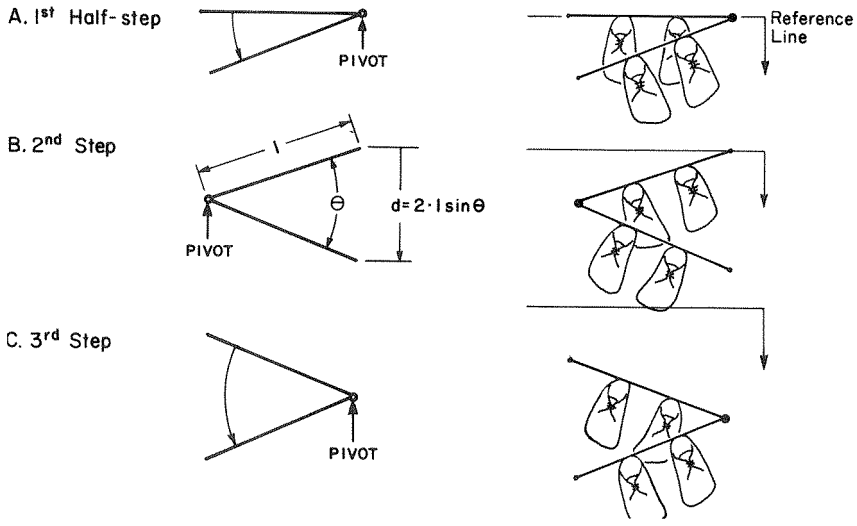

FIGURE 16.—Pivot ambulation: forward progression by alternating rotations about two lateral points.

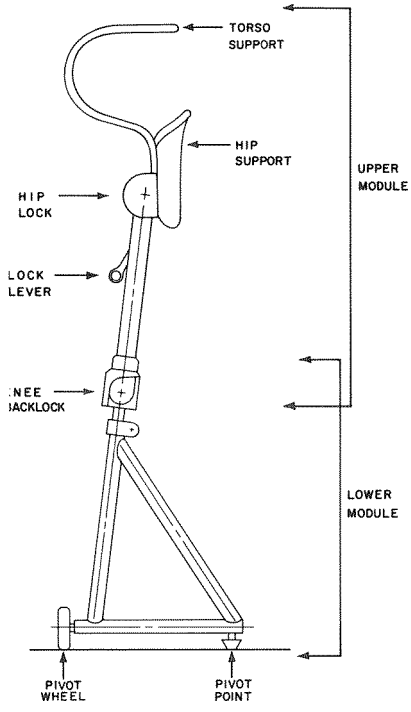

FIGURE 17.—Lateral schematic view of PACO III.

scoping tubes are then lowered to the floor to prevent tipping forward and the armrests are raised up as much as 40 cm. The result is a pair of stable parallel bars attached to the wheelchair.

Like its predecessor, PACO III (Fig. 17) has upper and lower modules for easier donning and doffing while seated in the wheelchair. The lower module is, in essence, a triangular structure. Telescoping tubes allow adjustment for knee-to-ankle length. Knee locks on the upper module slide onto the hexagonal studs located at the knees of the lower module, as a socket wrench slides onto a nut. The knee locks employ a cable-wrapped capstan which, when engaged, allows knee extension but not flexion. When he is standing, therefore, the knee locks will hold the paraplegic's weight if he cannot do so with his arms. When he is fully upright, preset latches at the knees and hips automatically engage, creating a rigid structure from base to torso-support. To sit, he disengages the hip and knee latches, and the capstan can be slipped gradually with the lock levers to allow controlled descent.

Thin-wall rectangular aluminum tubing forms the lateral struts of the upper module, representing a five-fold increase in lateral bending stiffness over the solid I-section of PACO II, and an 18 percent saving in weight. Also, the mechanisms which actuate the hip and knee locks are contained within the tubing, making the design cleaner and more reliable. Adjustment of the upper struts (knee-to-hip length) is accomplished by simply sawing the tubing to length and drilling four holes.

At this time assembly and distribution are being completed.

The main disadvantage apparent in this concept at present is relatively poor cosmesis. It is our hope that this will be offset by the advantages, especially for active paraplegics. Evaluation of four PACO III units currently under construction should help clarify this question.

Goals for the Future

Stair-climbing is the most important remaining barrier whose elimination is asked by most paraplegics. Architects seem to delight in designing split-level homes, sunken living rooms, multi-step entrances in public buildings, and landscaping and house design which require entering halfway between two floor levels—making all of them inaccessible for the wheelchair-bound. Paraplegics object to such discrimination-by-design.

We believe that our crutch-less standing brace technology may become the first essential building block toward paraplegic stair climbing. That would eventually open the way to much better rehabilitation of paraplegics who are now excluded from that large

portion of the world accessible only over multiple closely-spaced steps. If a paraplegic could bridge the three-to-six-step barrier that now blocks his access to many public and private buildings, he could function usefully at many more locations.

Adequate rehabilitation has not been achieved as long as such large portions of the world remain off-limits to the independently moving paraplegic.

Engineering Applications in Orthotic and Prosthetic Treatment of Musculoskeletal Defects

Motion Study Laboratory
Rehabilitation Medicine Service
Veterans Administration Hospital
10701 East Boulevard
Wade Park, Cleveland, Ohio 44106
E. Byron Marsolais, M.D., Ph. D., and E. Schulz, E. E.

Three-Dimensional Gait Analyses

Since the last progress report, two additional normal subjects have been analyzed by means of our three-dimensional stroboscopic gait-analysis system. These studies have been helpful in improving the computer analysis as well as our EMG recording techniques. They have also been important in developing the computer software necessary to generate clinically useful graphic displays based on gait data. Because of the tremendous costs in time and energy involved in the stroboscopic studies, it has been resolved that maximum effort be directed towards the automation of the three-dimensional force analysis incorporating the Selspot System. Towards this end, the Selspot cameras have been mounted as they are to be used for monitoring motion, and careful tests have been performed to determine the precise capabilities of the system.

Two-dimensional kinematic studies have been carried out using each Selspot camera separately to record the motion of five light-emitting diodes (LED's) fastened to one leg and arm of a subject. The results were then displayed graphically as a stick-figure sequence. The system proves to be functional, but the errors at the limits of the cameras' fields of view are not acceptable (± 2.0 cm in the laboratory space). Optical synchronization also becomes marginal at the extremes, and may be entirely lost if the synchronization LED does not point directly enough at the camera. Other faults have also been discovered.

All these problems appear to be related to LED intensity. It is believed that minor changes in the LED driving circuits, and in-

corporation of more efficient LED's, will achieve the necessary improvements and may also eliminate the necessity for two light sources per anatomical target. Other circuit changes are anticipated which will cut power requirements for the LED's by 67 percent. This will greatly increase the possibility of battery-powered operation, which would eliminate the need for cables to the patient.

The software controlling the acquisition of Selspot data has been optimized to allow a sampling rate of 100 Hz, and has been modified since the last report to allow the analog-to-digital converter to acquire force-plate and EMG data in synchrony with Selspot operations. Three-dimensional kinematic analyses will be possible as soon as the new LED's have been incorporated.

Comparison of Five Orthoses, Including an Implanted Electronic Stimulator (NMA)

Although this study was initially targeted to include ten patients, no additional volunteers for the electrical stimulation implant (Neuromuscular Assist—NMA) were added to the study over this last reporting period. It has been decided, at this point, to analyze the information on the seven patients presently involved. Tests on these patients have been completed.

The Functional Electronic Peroneal Brace (FEPB) was found to be so difficult to use that completed tests including this brace were possible on only one patient. Difficulties included creeping of the electrodes away from the motor point, and skin irritation after prolonged use. The device was also very difficult for patients to manage at home.

The study on normal subjects mentioned in the previous report, in connection with the orthotic study, has been expanded to include 20 females and 26 males. The data based on normals have been more carefully studied since the last report, and some significant correlations between foot contact measurements and various independent variables (including body build) have been noted. A paper on this detailed study has been completed and will be submitted to Clinical Orthopaedics and Related Research.

As a consequence of these new findings the scoring system mentioned in the previous report has been modified. A paper on this aspect is being prepared and it is planned to submit it for publication during the next reporting period.

Functional Electrical Stimulation of Paralysis of Musculature of the Hip

The design of the microprocessor-based stimulation system to be

used in this study was completed during the last half of 1976. Fabrication has been initiated.

Some problems with movement and breakage of the implanted electrodes have been experienced in the experiments to determine the functional contributions of the various hip muscles. Experiments to determine the exact cause and to find solutions to these problems are under way at Case Western Reserve University. Some larger-diameter coil wire electrodes will be tested here in the near future. It is believed that these will be less vulnerable to breakage.

Patient Evaluation of a Functional Electrical Stimulation Hand Orthosis

Veterans Administration Hospital
10701 East Boulevard
Cleveland, Ohio 44106
P. Hunter Peckham, Ph. D.

The purpose of this project is to evaluate clinically the performance of an orthotic system which provides spinal-cord-injury patients with controlled hand motion, and to investigate the feasibility of deploying this system to a larger group of patients in more extensive clinical testing. The system employs electrical stimulation of the finger flexor and extensor muscles of C5 quadriplegic patients to provide controlled prehension and release, respectively. Evaluation of the orthosis will include testing of the system for performance parameters as well as evaluation of the clinical acceptability of the device to the patient.

The system under development (based on a prototype system developed in the Applied Neural Control Laboratory at Case Western Reserve University) operates as follows:

1. The position of the head or shoulder is transduced and used to control the stimulus delivered to the appropriate finger flexor or extensor muscles;
2. Chronically indwelling percutaneous coil wire electrodes are used to apply the stimulus;
3. Automatic control has been added to enable the patient to choose and reset his zero reference position, and hold the stimulus output regardless of his proportional signal. These functions are controlled by a processed, two-level myoelectric signal.

The prototype unit is inconvenient for the patient to use because it is large and heavy, and therefore restricted to non-portable use. Furthermore, interconnection to the patient is awkward and time consuming. These limitations have made the units unacceptable to

the patient for routine daily use. Miniaturization of the device would promote its acceptance.

Two phases are involved in fulfilling the goals of this research project. The first phase is the design and fabrication of the miniature stimulation hardware and controls in a form suitable for use by the quadriplegic patient and his attendant. The second phase involves the evaluation and deployment of these systems to the patients. The primary involvement to date has been in fabrication of an appropriate device.

The system under development operates conceptually the same as the prototype system, except that provision has been made for the alternate (myoelectric) control scheme. This feature allows selection of one of two control schemes, depending upon which is more appropriate to the individual patient.

The primary focus has been on miniaturization. In order to achieve the small size, convenient use, and reliable performance required by the patient systems, major hardware redesign of the CWRU system has been necessary. Specifically, the circuitry has been redesigned to utilize a minimum number of components consistent with reliable operation, and with minimum current consumption requiring the fewest possible batteries. Throughout the design, a modular approach has been utilized; this approach will allow individual blocks to be translated into the design of future devices for similar applications. Design of modular blocks for this system has been completed and all except one has been constructed and tested.

The test modules have been combined into an operational laboratory stimulator. This unit will serve two purposes. First, it will be used by patients in the laboratory prior to miniaturization to insure proper operation of the patient version. Second, since the large device exactly replicates the operation and circuitry of the small units, it will be used to determine control and stimulus parameters which will vary from one patient to another—these can then be fixed in each individual's personal stimulator. This allows further reduction in size by eliminating all internal potentiometers.

Throughout critical stages of design, patients who will be candidates for this system have been involved in evaluating various aspects. In particular, experiments were performed to examine the problem of interference of the stimulus artifact on the myoelectric signal (MES). The results demonstrated that gating the MES amplifier off during the presence of the stimulus artifact eliminated this problem.

In the next period, proper operation of the laboratory unit will be ascertained and the design implemented in the miniature patient

devices. The goal is to fabricate units which have external dimensions of roughly 4 × 6 × 2 in. The circuitry will be produced on printed circuit boards using miniature components and high-density techniques. To provide easy use by the patient, the device will require only a single connector to activate the system, and mercury batteries will be used to eliminate the need for recharging; anticipated battery life is approximately 2 months with expected usage.

At present, three patients who are candidates for use of this system are working with these investigators.

Ultralight Below-Knee Prosthesis

Moss Rehabilitation Hospital
Rehabilitation Engineering Center
12th Street and Tabor Road
Philadelphia, Pennsylvania 19141
A. Bennett Wilson, Jr.

The contract with the Veterans Administration for development of a practical ultralight below-knee prosthesis became effective October 6, 1976.

The original concept, which has not changed, was to provide a crustacean-type below-knee prosthesis of molded sheet polypropylene, that would consist of only three parts—the socket, the shank-foot section, and a sole-and-heel section (Fig. 18). Any or all functions provided by the variations of the conventional PTB prostheses can be obtained, the only change being reduction in weight and any consequent shift in the center of gravity.

Experience before and since October 6, 1976, has shown that the properties of sheet polypropylene are quite satisfactory for use of this material in the fabrication of sockets, shanks, and feet for below-knee prostheses (Fig. 19, 20, 21). Workmanship, of course, plays a considerable role in the strength of the assembly. Northwestern University has conducted some tests to destruction and found that prostheses made of polypropylene at NU according to our instructions were quite satisfactory.

Most of the time has been spent on development of a practical method for fabrication of the foot section. Two fairly comparable methods have evolved. In one, a temporary foot is made by forming polypropylene over a SACH foot to form a hollow foot, which is used during dynamic alignment and (later) as a mold for the positive foam model over which the definitive foot-and-shank section is molded. The alternative method uses an external-keel type of SACH foot during alignment, and the keel as part of the positive model.

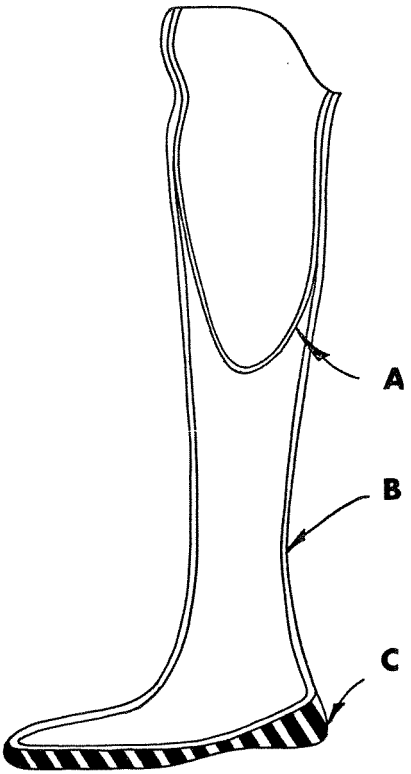

FIGURE 18.—Crustacean-type below-knee prosthesis: A. molded polypropylene socket; B. molded polypropylene shank and foot; and C. sole and heel cushion.

Both methods have advantages and disadvantages when compared with each other, and both will be presented in a manual which is being prepared for submission to the Research Center for Prosthetics.

It is anticipated that one manufacturer or more will make available either mass-produced (probably blow-molded) polypropylene feet, or specially sized external keels, to reduce shop time.

Because of the tremendous reduction in weight (approximately 60 percent) the problem of suspension is reduced, and it has been the custom here to provide supracondylar brims that require no auxiliary suspension devices such as belts, cuffs, or wedges. Polypropylene sockets are accepted quite well by the patients, and are in fact preferred by most because of the "feel."

A manual will be completed by March 15, 1977. Though not specified in the contract, a report on patient use and reaction is being compiled.

A field study or large clinical evaluation appears to be in order.

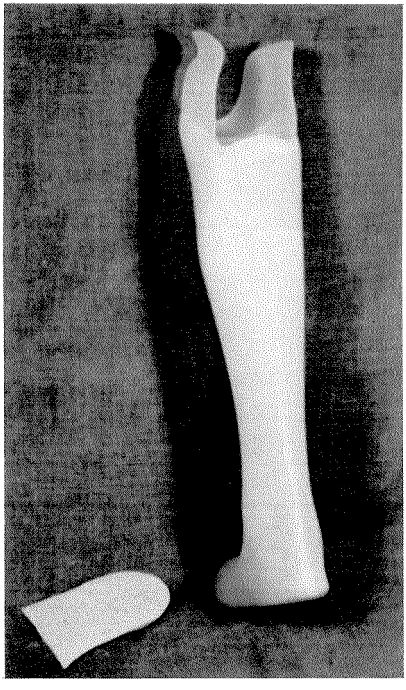

FIGURE 19.—Ultralight polypropylene below-knee prosthesis before attachment of heel cushion. This patient prefers no sole cushion, but wears shoes with sponge rubber soles.

FIGURE 20.—Patient donning the ultralight below-knee prosthesis developed at Temple University.

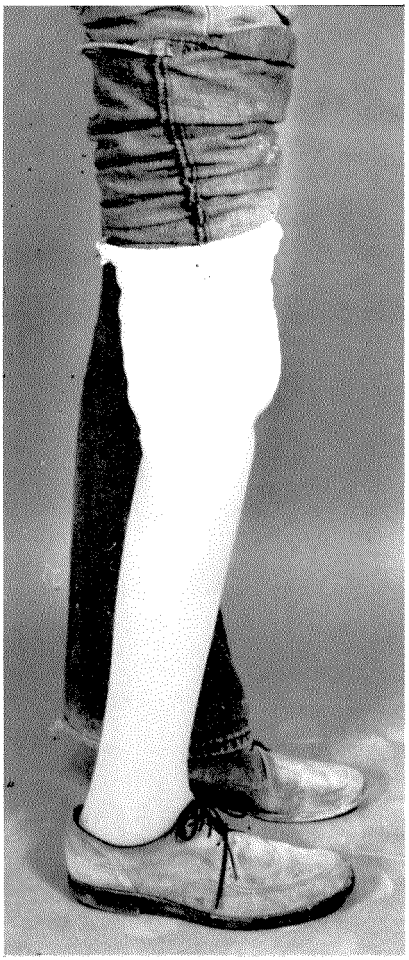

FIGURE 21.—Patient wearing an ultra-light polypropylene below-knee prosthesis.

Orthopedic Implant Device Retrieval and Analysis

VA Hospital
New Orleans, Louisiana 70146
Allen M. Weinstein, Ph.D.

It is the purpose of this investigation to retrieve all orthopaedic devices which are removed during the normal and routine medical care of the patient and correlate the medical histories, surgical findings, histological evaluations and radiographic reviews with the characteristics of the materials from which the implants are manufactured. Implants are retrieved on both a restrospective and prospective basis. All patients receiving orthopaedic implants are followed from the time of insertion.

Medical data and metallurgical data forms are being used which are essentially identical to the ASTM F-4 draft document entitled "Standard Recommended Practice for the Retrieval and Analysis of Metallic Orthopaedic Implants." There are currently 15 patients in the study; 8 prospective and 7 retrospective. The devices retrieved cover the standard armamentarium of the orthopaedist.

No correlations of data have as yet been attempted.

Evaluation of Electrical Techniques for Stimulation of Hard Tissue Growth

VA Hospital
Irving Avenue and University Place
Syracuse, New York 13210
Robert O. Becker, M.D., J. A. Spadaro, Ph. D., and A. A. Marino, Ph. D.

Background

The main thrust of this program has been to determine the factors that stimulate and control growth and healing in the musculoskeletal system, so that clinical applications may be made.

From the viewpoint of basic biological knowledge, several factors were clearly evident when we began our studies in 1958. First, the healing of an injury is a controlled process; i.e., in the normal condition, cellular activity is "turned on" in response to the injury, proceeds until healing is complete, and is then turned off. From this point of view it is a classic example of a feedback control system. Secondly, when the entire spectrum of the animal kingdom is looked at, it becomes apparent that the healing processes of more primitive animals are far more competent than those of the human.

Of particular interest to us is the healing process of regeneration in which a missing portion of the body is regrown into a normal complex structure. The salamander, for example, is capable of regenerating a limb in a few weeks. The structure of the salamander limb is as anatomically complex as the corresponding human limb. Why then is it that we cannot regrow our limbs? The question: What are the factors that stimulate and control regeneration of the salamander limb? would appear to be clinically pertinent. In the human, the only truly regenerative growth that we possess is the healing of fractures: therefore, knowledge of these factors would at least be useful in the treatment of non-unions of fractures in the human. Furthermore, such knowledge may well be put to clinical use in stimulating regenerative growth that we as humans no longer have. Such growth control would be applied not only to the re-

growth of limbs, but more immediately (and more pertinently) to such structures as skeletal muscle, cardiac muscle, peripheral nerve and spinal cord, joint cartilage and total joints in general.

We began our studies in 1958 with an evaluation of a factor previously thought to be unrelated to any control function—the electrical current of injury. This is revealed by an electrical potential which can be measured at any site of injury in any living organism. We found that the current of injury persists throughout the entire time of healing, and that it follows an entirely different sequence of changes in injuries healing by regenerative growth than it does in similar injuries in other, but closely related, animals not capable of regenerative growth (1). The pattern is so striking that it was concluded that the local electrical factors at the injury site represented only a signal resulting from the operation of a control system that permeated the entire organism.

Intensive study was devoted to this issue, and it was determined that these electrical potentials are related to the central and peripheral nervous system where they represent the activity of another mechanism more primitive (than the well known action potential) for the transmission of data. The present concept is that this analog-type data transmission and control system antedates the action potential system, and that it is responsible for a number of primitive functions in addition to growth control. Such additional functions defined so far include; (i) pain sensation, (ii) general level of excitability of the action potential system, and (iii) control over biological cycles. Most recently we have acquired data indicating that this system may be residing in the perineural cells of the CNS, the glia cells centrally, and the Schwann cells peripherally. While numerous papers have been published in this area of neuroelectronics, two recent publications summarize and present the data within the systems concept (2,3).

From a clinical point of view, we were primarily interested in the output of the system that appeared to have growth stimulating and growth controlling properties. Since growth is perforce the result of cellular activity, and since regenerative growth requires not only mitosis, but also a dedifferentiation (a return to a primitive cell type) we directed a study at the results of exposure of cells to various levels of direct current. Our test system was the nucleated erythrocyte, and we found that dedifferentiation did indeed occur, but only in a narrow range of current and voltage of extremely low values (4,5). We were then able to proceed to determine, in detail, the control system that regulates regenerative growth in general and fracture healing specifically (6).

Obviously, the primary question is: With this knowledge, is it

possible to stimulate some measure of regenerative growth in mammals?

In our experiments in 1972, we amputated the foreleg of laboratory rats between the shoulder and elbow and implanted small electrical units designed to produce the appropriate level of current. We obtained gratifying regrowths, occasionally as far as regeneration of the entire distal humerus complete with an elbow joint of normal histological appearance (7,8). In similar experiments which are unpublished, we were able to stimulate considerable regrowth of the proximal humerus, an important point since in this instance, growth is proceeding proximalward. Such "upstream growth" does not normally occur even in animals capable of regeneration.

The first clinical application of this knowledge has been in the area of un-united fractures. Over the past 3 years we have treated a variety of cases with various electrical techniques. We have found that growth can be stimulated solely by appropriate electrical currents and voltages (which must be in the biologically significant range). A recent publication presents all the technical details (9).

Several points must be emphasized at this juncture. First, while all electrical parameters are designed to be well below the level of harmful effects, they are further designed to duplicate, in so far as is presently possible, the values that would have been produced at the time of the original fracture by the patient's own electrical control system. Thus, we are employing a simulation of a natural biological process and not some modality that is foreign to the body.

Secondly, such simulation can only approximate a natural biological process when the electrical parameters are injected by metallic electrodes. The electrochemical events that occur in the immediate vicinity of a metallic electrode passing current are poorly understood for simple systems, and are completely unknown for biological systems. A complete systematic study of these processes is urgently required before the full potential of this growth control process can be clinically realized. We are presently beginning such a study. From an orthopedic point of view, the possible clinical applications have been indicated in a number of publications (10, 11, 12). Obviously other clinical applications can be entertained, ranging from effective pain control to stimulation of bone growth into suitable metallic devices to provide anchorage points for external prostheses.

Most recently we have investigated the possible application of our techniques to situations requiring growth retardation rather than stimulation. Since, biologically, all active growth processes are

characterized by high electrical negativity, we had always employed metallic electrodes (generally silver) driven negatively (cathode) in both animal and human studies. The obvious question then was, would positive potentials retard growth? We found that metallic electrodes, when used as the anode, are very active electrochemically and in general, exhibit a tendency to give off, and drive into the local tissues, metallic cations (a silver electrode will inject silver ions, a platinum electrode, platinum ions, etc.).

Thus, at this time, we have been unable to generate a pure anodal environment without the accompanying electrochemical changes. However, this tendency to emit positive metallic ions from the anode has itself proven to be of very great clinical interest. For example, silver has been long recognized as a potent antibacterial with little, if any, harm to the mammalian cell system. The problem in its clinical use has been that silver compounds either dissociate very little and are ineffective, or they dissociate readily and are toxic. Metallic silver foil is still used frequently by European surgeons as a primary wound dressing; however, the emission of silver ions from it is negligible. We found that silver electrodes, when driven positive, will readily emit silver ions which will migrate along the lines of voltage gradient, penetrating tissues for approximately 1 cm. These are unaccompanied by any new anion and are non-toxic to mammalian cells.

Their anti-bacterial spectrum appears to be complete and we have found no type of bacteria that cannot be killed with this modality.

We have tested this concept clinically in 12 cases of osteomyelitis, with excellent results. It now appears that for local infections, we have an extremely effective treatment modality which can effectively suppress all varieties of bacteria and a number of fungi in tissues with poor blood circulation without damaging the host cells or tissues. A full report is in preparation.

This technique may be used to drive other metallic cations into tissues, although little is known about the resultant effects. We have experimentally applied the concept to one other system—the rheumatoid arthritic synovium. Here it has been known that gold, systemically administered, is effective in suppressing the synovial cell overgrowth. The problem was that the majority of patients exhibited no effect because the gold did not penetrate the affected joint spaces. In animals with experimental arthritis, we found we could effectively suppress the synovial cell overgrowth by inserting a gold wire into the joint cavity and driving it positive, with a current and potential below electrolysis levels, with one treatment or 30 minutes duration. Obviously the gold ions are injected directly

into the desired site and there is no total body burden of gold with its known toxic effects. It would appear feasible to consider further exploration along these lines in rheumatoid arthritis and other conditions, as long as the target cell or tissue to be suppressed was sufficiently different from the normal cells or tissues.

Present Investigations

The laboratory is presently involved in a systematic study of various techniques for the injection of electrical forces into tissues, particularly bone, in an attempt to define the optimal safest method for stimulation of bone growth. We are also involved in a study of the biological effects of electrical fields of various types, to search for beneficial or harmful effects. We also hope to begin a systematic study of a variety of metallic electrode systems in biological tissues to elucidate the electrochemical changes that occur, and to search hopefully for other useful biological effects.

References

1. Becker, R. O.: Bioelectric Factors in Amphibian Limb Regeneration. J. Bone and Joint Surg., 43-A:643-656, 1961.
2. Becker, R. O.: Significance of Bioelectric Potentials. Bioelectrochem. & Bioenergetics, 1:187-199, 1974.
3. Becker, R. O.: Basic Biological Data Transmission and Control System Influenced by Electrical Forces. Ann. N. Y. Acad. Sci., 238:236-241, 1974.
4. Becker, R. O., and D. G. Murray: Method for Producing Cellular Dedifferentiation by Means of Very Small Electrical Currents, Trans. N. Y. Acad. Sci., 29:606-615, 1967.
5. Harrington, D. B., and R. O. Becker: Electrical Stimulation of RNA and Protein Synthesis in the Frog Erythrocyte. Exp. Cell Res., 76:95-98, 1973.
6. Becker, R. O., and D. G. Murray: Electrical Control System Regulating Fracture Healing in Amphibians. Clin. Orth. Rel. Res., 73:169-198, 1970.
7. Becker, R. O.: Stimulation of Partial Limb Regeneration in Rats. Nat. 235:109-111, 1972.
8. Becker, R. O., and J. A. Spadaro: Electrical Stimulation of Partial Limb Regeneration in Mammals. Bull. N. Y. Acad. Med., 48:627-641, 1972.
9. Becker, R. O., J. A. Spadaro, and A. A. Marino: Clinical Experiences with Low Intensity Direct Current Stimulation of Bone Growth. Clin. Orth. Rel. Res., 124:75-83, 1977.
10. Becker, R. O.: Augmentation of Regenerative Healing in Man, a Possible Alternative to Prosthetic Implantation. Clin. Orth. Rel. Res., 83:255-262, 1972.
11. Becker, R. O.: The Control of Healing Processes . . . Guest Editorial. Orthop. Rev., Feb. 1974.
12. Becker, R. O.: Boosting Our Healing Potential. Science Year (World Book Encyclopedia) 40-55, 1975.