Bull. Prosth. Res., BPR 10-31, Spring 1979.

# VETERANS ADMINISTRATION REHABILITATIVE ENGINEERING RESEARCH AND DEVELOPMENT SERVICE PROGRAMS

## PROSTHETICS

*Edited by*

Eugene F. Murphy, Ph. D., Director

Office of Technology Transfer
Veterans Administration
252 Seventh Avenue
New York, N.Y. 10001

**Rehabilitative Engineering Research and Development Center**
**Palo Alto VA Medical Center**
**3801 Miranda Avenue**
**Palo Alto, California 94304**
**Larry J. Leifer, Ph. D.**

### Introduction

On May 5th, 1978, Veterans Administration officials announced the establishment of a Rehabilitative Engineering Research and Development Center at their Palo Alto Medical Center. The RER&D Center is a cooperative venture, between faculty and students of the Stanford University School of Engineering and VA Medical Center staff. The new center is charged with bringing advanced engineering science and technology to the direct benefit of severely disabled persons. The research and development program of this center is now in a formative phase. In large measure it reflects areas of excellence already available at Stanford, at the Palo Alto VA Medical Center, and in the surrounding research and industrial community. The organizational structure and philosophy of the new RER&D Center are designed to make maximal use of this innovative environment. The center accepts responsibility for testing new developments in the clinical environment and for subsequent distribution of proven devices

through commercialization. These ideas and examples of early activity in the RER&D Center are detailed within this report.

### Goal

The RER&D Center will bring advanced engineering science and technology to the direct benefit of disabled persons. The following subgoals have been identified:

1. Perform basic research needed to understand physical disability and define benefits to be gained through development of new devices for the disabled. Emphasis is placed in the areas of:
   a. orthopedic biomechanics;
   b. neuromuscular systems; and
   c. sensory communications.
2. Design and develop manufacturable devices for the disabled. Emphasis is placed upon the following methods:
   a. computer simulation of disability and corrective devices;
   b. microelectronic and microcomputer applications;
   c. comprehensive product design to deal with the physical, emotional, and intellectual needs of the disabled;
3. Assure the availability of new devices for the disabled:
   a. evaluate new devices in clinical and outpatient environments;
   b. train physicians, therapists, and patients in the use and maintenance of rehabilitative devices;
   c. promote understanding and widespread adoption of worthy devices;

### Key Resources

The RER&D Center is located within an area of longstanding biomedical research and development. Within a 10-mile radius one has access to the following institutional resources:

1. Palo Alto Veterans Administration Medical Center,
2. Stanford University School of Engineering,
3. Stanford University School of Medicine,
4. Children's Hospital at Stanford,
5. Stanford Research Institute,
6. NASA Ames Research Center,
7. Santa Clara Valley Medical Center, and
8. Santa Clara Valley industry.

Biomedical engineering research and development has been active in this community for many years. A clinically oriented rehabilitation engineering center has existed at the Children's Hospital for the last 5 yrs. It has often been possible to make minor changes in ongoing biomedical studies such that the work is better tuned to the pragmatic issue of delivering new technology and devices to the disabled. Experienced research and development personnel have responded to

the challenge. The center itself is directed by experienced researchers whose academic mission is the training of research-oriented physicians and engineers at the M.D., Ph. D., M.S., and B.S. levels. Student involvement at all levels brings vigor and freshness into an area of desperate need. The complexity of many rehabilitation problems makes their solution people-intensive and thus expensive. Student participation can reduce rehabilitation engineering costs while providing an excellent training experience.

### Approach

Operation of the RER&D Center is based upon the following principles:

1. Management by catalysis;
2. Consumer involvement;
3. Student involvement; and
4. Vertical integration—
   a. basic research
   b. applied research
   c. development

   z. basic care

Management by catalysis is based upon the premise that most of the ingredients needed for a successful operation are already present in the environment. The management function then becomes one of identifying goals and facilitating the accomplishment of objectives by funding and motivating individuals who will perform the tasks required. This approach is feasible because of the breadth and depth of personnel available within the resource set of the RER&D Center. The spirit of the program is entrepreneurial without the dollar profit motive. Ideas will be developed to the point of practicality. New devices will be brought to the market place.

Consumer involvement in the research and design/development program of the center is assured. The center is located directly on the VA Medical Center grounds adjacent to the Spinal Cord Injury Service. Disabled persons are consulted during the initial needs assessment phase of a new project. They are then part of the design/development team. The center has staff members and students who are themselves disabled. While the disabled person may not always be the expert regarding his/her own disability, he/she is the potential user of an improved aid. Our concern for user acceptance is focused on a series of projects to be done with behavioral scientists. For example, in the Robotic Aids Project, behavioral studies are being planned to coincide with each phase of hardware and software development. These studies are designed to keep us informed about real user

needs, capabilities, and expectations.

Student involvement is present at all levels of performance. Bachelor of Science candidates participate in projects for which locally available technology provides useful solutions. A typical project lasts 5-10 weeks. Both needs assessment and prototype development have been successfully performed by these engineering and product design students. Master of Science degree candidates are expected to use state-of-the-art technology. These students typically work on one problem for 9 months and have time to get well acquainted with the appropriate technology. They are expected to interact regularly with prospective clinical users during device development as well as device testing. Doctor of Philosophy and Doctor of Medicine candidates will spend 2 to 4 yrs focused on a problem of basic significance to our understanding of disability and the means of treatment. These individuals are expected to provide new information and to extend the boundaries of our knowledge.

The concept of vertical integration is borrowed from contemporary corporate management methodology. The term refers to the presence, within one organizational unit, of the means for performing research, design/development, manufacture, and distribution of a product. Within the RER&D Center this approach refers to the performance of basic research needed to define device specifications, the design/development of pre-production prototypes, the evaluation of prototypes on a routine inhouse basis, the contracted manufacture of limited numbers of samples of seemingly worthy devices, and the distribution of these devices under contract and VA prescription. Key personnel work with a new device from the time of its conception to the time of its distribution and assure that persons expected to use or prescribe the device are properly trained.

### Structure

Relationships between the PAVAMC RER&D Center and other organizational units are presented in Figure 1. The command hierarchy is simple and vertical. The advisory mechanisms are multiple and require some explanation. At the Palo Alto Veterans Administration Medical Center level there are two Dean's Committees which will advise the Medical Center Director regarding research and professional personnel in the RER&D Center. One Dean's Committee is chaired by the dean of the Stanford Medical School and oversees operation of the affiliateship between the VA and the Medical School. The chairpersons of departments related to rehabilitation are members of this committee. The second Dean's Committee is to be chaired by the dean of the Stanford School of Engineering. Key investigators and chairpersons will be committee members. An affiliation between the School of Engineering and the VA is being developed in parallel

with that of the Medical School Affiliation. These committees are not concerned with routine operational factors of either the PAVAMC or the RER&D Center.

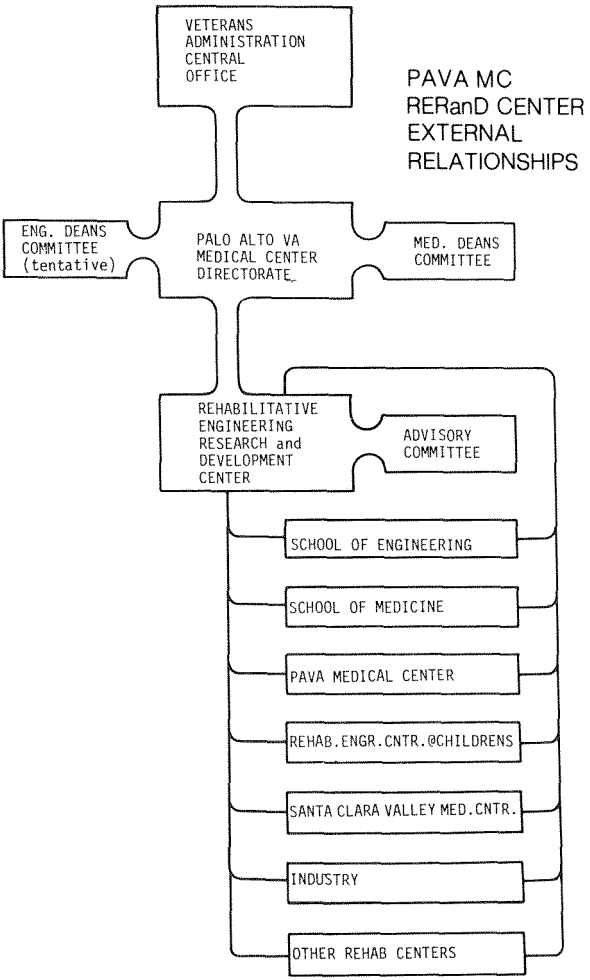


FIGURE 1.—RER&D Center External Relations. The command hierarchy of the RER&D Center is simple and vertical. The Center Directorate reports to the Palo Alto Veterans Administration Medical Center Director and his Associate Chief of Staff (ACOS). The Medical Center Director communicates directly with the Rehabilitative Engineering Research and Development Program Director in the Veterans Administration Central Office (VACO). Refer to the text regarding advisory roles played by Deans of the Schools of Medicine and Engineering. The RER&D Center maintains an advisory board of its own for coordination with local industry and medical units. The series of organizational units tied into the RER&D loop are principal elements in the center's resource pool.

Internal structure of the RER&D Center is shown in Figure 2. This graphic representation is designed to convey two important principles:

1. Interaction, and
2. Fluidity.

As an interaction matrix, the columns of Figure 2 represent academic lines of investigation which are emphasized in the center program:

1. Orthopaedic Biomechanics;
2. Neuromuscular Systems; and
3. Sensory Communications.

Each of these areas is supervised by a senior investigator with a regular faculty appointment at Stanford, typically in engineering and/or medicine. Approximately one third of the center staff are allocated to each investigational category. Individual staff positions are further defined according to their function:

1. Basic Research;
2. Design and Development; or
3. Training, Evaluation and Promotion.

Each of these RER&D Center functions is supervised by a senior investigator with a regular faculty appointment at Stanford. Note that personnel in each category of investigation must deal with each performance function. This arrangement explicitly indicates our intention that persons working within any given academic discipline are expected to interact with, and participate in, all phases of a project from basic research goal definition through training of persons expected to use our products.

Interaction is further defined to mean that persons working within any given area are expected to interact with people and projects in adjacent nodes of the matrix. For example, a design/development engineer can be expected to spend 60 percent of his/her effort on an orthopedic biomechanics device, 30 percent on instrumentation for a new research program in neuromuscular systems analysis, and 10 percent on the training of physical therapists who are using an exercise device developed last year. In a similar sense, a senior investigator may spend 75 percent of his/her time on basic research associated with development of new sensory prostheses, a 15 percent effort may be directed towards overseeing the development of a prosthesis, and a 10 percent effort may be invested in training physicians responsible for prescribing sensory prostheses. For completeness, a staff physical therapist can be expected to spend 60 percent of his/her time on patient treatment with a new device or methodology developed in the center, a 25 percent effort may be directed towards a clinical research/evaluation project, and a 15 percent effort participating in basic orthopedic biomechanics research.

Fluidity is represented by the open form of each matrix node. It is

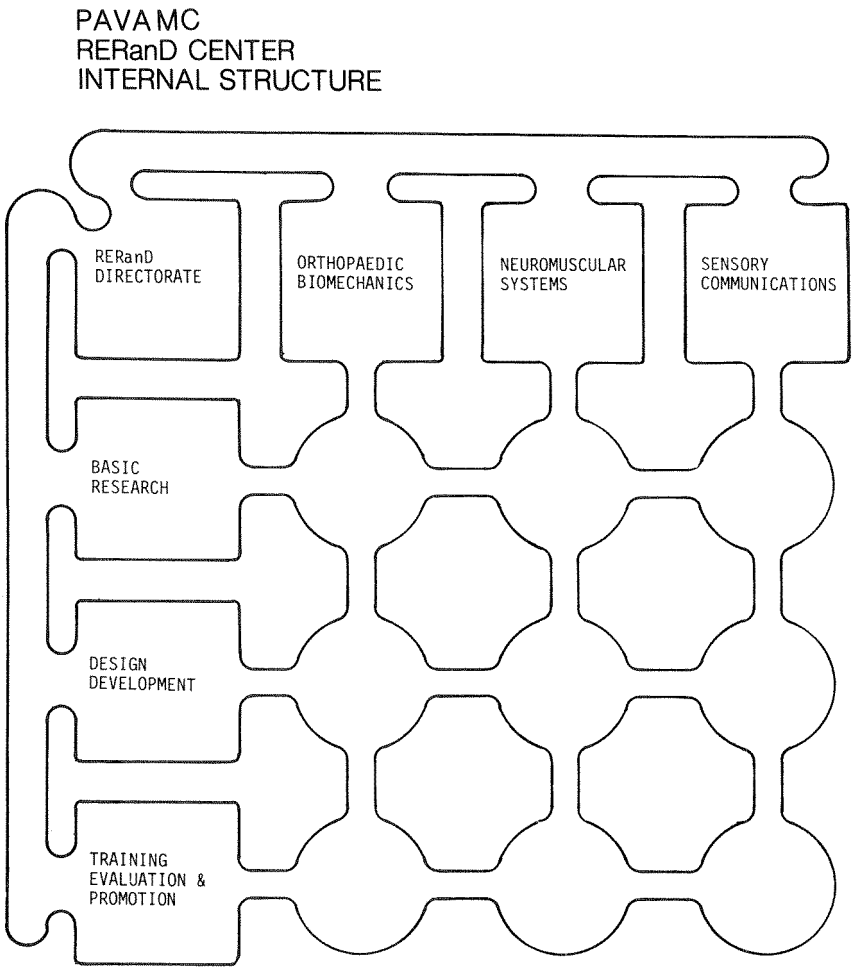


FIGURE 2.—RER&D Center Internal Structure. The center is composed of seven administrative functions. These are arranged as an interaction matrix to emphasize the degree to which interactions could and should exist in daily operations. Three columns identify the areas of investigation mandated for the RER&D program. These are academic disciplines and will be supervised by senior staff with faculty appointments at Stanford University. Three rows define the primary functions of the center. Performance of these functions is supervised by senior staff with faculty appointments at Stanford. Interaction between individuals is strongly encouraged. Flexible allocation of individual effort amongst related nodes in the diagram is expected. The RER&D directorate is responsible for overall coordination of goals and resources.

important to center function that individuals be free to move from one project and function to another as circumstances demand. With this freedom comes the responsibility to participate in areas and functions which may be of secondary interest at any one moment but require the energy and expertise of a particular individual. As a correllary, it is acceptable that individuals alter their areas of involvement after fair trial. It is expected that 60 percent or more of each person's effort will be placed within one node at a given time. The remaining percentage would not be divided amongst more than three other nodes. The guiding principle here is that clear priorities must exist for one's various commitments. The first priority task must get more than half of one's effort. At the other extreme, a commitment of less than 10 percent becomes diminishingly small in the world of hours-per-week.

### Basic Research and Development

Six major research and development proposals have been submitted to the Veterans Administration Central Office (VACO) for funding. These proposals have been tailored to stated goals of the Rehabilitative Engineering Research and Development Program. In each case, 3 to 5 yr of work have been proposed. We have chosen to focus our efforts on difficult problems, especially those which would seem to benefit most from the application of advanced technology. This set of proposals does not represent the full range of activity planned for the center. These and forthcoming proposals must be co-investigated by interdisciplinary engineering Ph. D./M.D. teams. Each new member of the center research staff is expected to develop his/her own line of investigation and to seek funding specific to those objectives via the Research and Development Merit Review process. Projects of this type are expected to be our primary product.

Preliminary feasibility studies are being funded out of the center's operating budget and typically involve MS and Ph. D. candidates who assess the value of proposed work from the points of view of benefit to the disabled and validity as a thesis topic. A brief description of seed-funded proposals (1 through 4 in Table 1) will follow. Titles and authorship of all submitted proposals are listed in Table 1. Student feasibility studies are described in the Student Project Section.

### 1. Robotic Aids

Persons who are mentally alert but have a severe physical disability, need to control their physical environment independent of continuous assistance by other people. It is proposed that robotic arms such as the Unimation Model-250 Electric Arm can be used by the severely disabled in such a way as to render practical assistance in the performance of daily living tasks which now require the continuous pres-

TABLE 1.—*Major Research and Development Proposal Titles*

SU = Stanford University Faculty Position
VA = Veterans Administration Staff Position
SRI = Stanford Research Institute Staff Position

1. Development of Robotic Aids for the Severely Disabled
   1.1 Larry Leifer, Ph.D., responsible engineer (SU, VA)
   1.2 Inder Perkash, M.D., responsible physician (SU,VA)
2. Internal and External Stabilization of the Disrupted Dorsal Lumbar Spine
   2.1 Robert Piziali, Ph.D., responsible engineer (SU,VA)
   2.2 Donald Nagel, M.D., responsible physician (SU)
   2.3 Inder Perkash, M.D., sponsoring physician (SU,VA)
3. New Methods of Peripheral Nerve Repair and Assessment of Function
   3.1 Larry Leifer, Ph.D., responsible engineer (SU,VA)
   3.2 Vincent Hentz, M.D., responsible physician (SU,VA)
4. Development of a Personal Information System for the Visually Impaired
   4.1 John Linvill, Ph.D., responsible engineer (SU)
   4.2 Greg Goodrich, Ph.D., responsible psychologist (VA)
5. Needs Assessment Regarding Telecommunications and the Spinal Cord Injury Patient
   5.1 Blair Burgess, Ph.D., responsible engineer (SRI)
   5.2 Inder Perkash, M.D., responsible physician (SU,VA)
6. New Instrumentation for the Study of Pressure Sores, Their Etiology and Prevention
   6.1 James Angell, Ph.D., responsible engineer (SU)
   6.2 Lars Vistnes, M.D., responsible physician (SU,VA)

ence of a nursing aid. The proposal details plans for the development of four modes of interaction between the user and the robotic aid (Fig. 3). These include the following:

1. Voice command of discrete functions and execution of preprogrammed tasks;
2. General purpose keyboard input terminal;
3. Mechanical switches for power and failsafe features; and
4. Analog control of arm/hand tracking tasks which are roughly equivalent to flying.

Given an updated version of the Unimate Arm and its microcomputer controller, the proposal deals with:

1. Investigation of alternative voice-command hierarchies;
2. Development of an analogue controller suitable for use by high-level quadriplegics;
3. Development of a microcomputer network capable of coordinating arm control, voice recognition, program preparation, information retrieval, analogue control and safety supervision;
4. Development strategies and instrumentation for a "Smart Hand" (i.e., sensory feedback, computer reflexes, "decisions," etc.) to extend the capability of the present robotic aid;

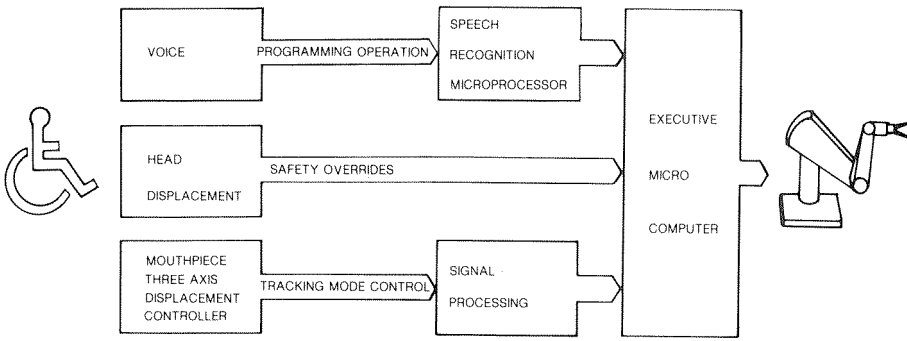


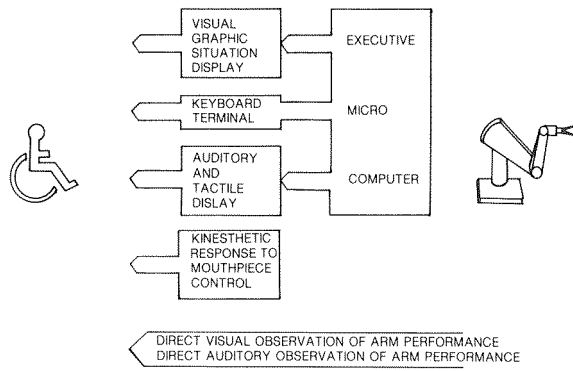


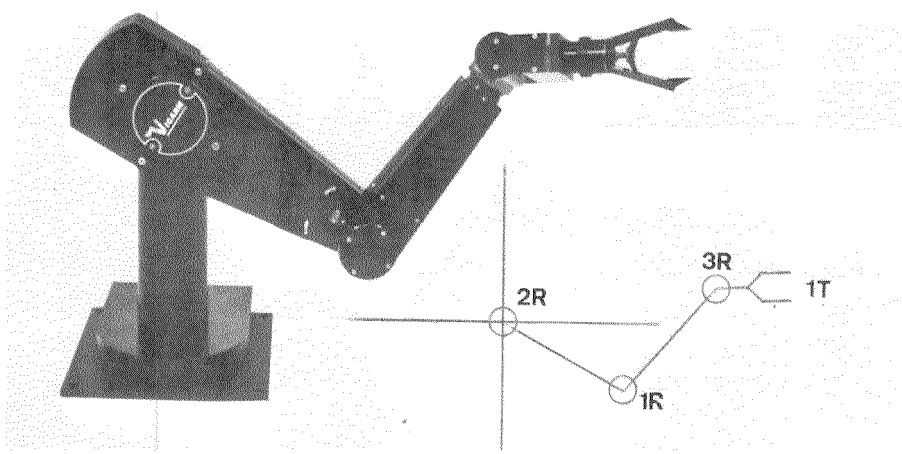


FIGURE 3.—Development of a Robotic Aid for the Severely Disabled. Initial studies have begun to determine the feasibility of using an industrial automation manipulator to provide severely disabled persons with some degree of physical control over their environment. The principal command modes are illustrated in Figure (3a). The various paths available for informing the user about manipulator performance are shown in Figure (3b). The arm and its degrees of manipulative freedom are presented in Figure (3c). This is the Unimation Model-250 Electromechanical Arm designed by Victor Scheinman. The project is led by: Larry Leifer, Ph.D., responsible engineer, and Inder Perkash, M.D., responsible physician

5. Perform user evaluations of each design/development phase (to be done in conjunction with behavioral scientists at the Stanford Boys Town Center, Professor Hastorf).

### 2. Spinal Stabilization

Recognizing the inadequacies of current lumbar spine stabilization methods, the proposal delineates the development of new measurement techniques and their application to the evaluation of both new and old stabilization methods (Fig. 4). From the physical point of view, the orthopedic surgeon prefers to immobilize the patient for many months to insure that the spine heals without introducing any deformity. At the same time, the physical therapist and the psychologist prefer to have the patient become active and self-sufficient as soon as possible. New force/displacement instrumentation has been developed to objectify the search for a functional compromise between these conflicting therapeutic goals. Preliminary tests have been performed to evaluate the following.

1. External Fixation
   a. Taylor-Knight brace
   b. three-point hyperextention brace
   c. whole-body cast
2. Internal Fixation
   1. wire loops
   2. Harrington traction rods

Preliminary results indicate that the whole-body cast is clearly best for spinal stabilization and worst with respect to overly limiting mobility. No device is adequate by itself. A combination of internal and external stabilization methods should be used until new devices are developed and tested. Experimental studies continue in conjunction with numerical simulation of structural properties of the spine.

### 3. Peripheral Nerve Repair

The technology of peripheral nerve repair and functional assessment has not changed appreciably in the last 20 years. New materials promise to facilitate the orientation of regenerating fibers. Microsurgery should improve the degree of correct functional reinnervation. However, high expectations have not generally been satisfied. In part this has been due to the lack of sensitive non-invasive techniques for the measurement of axonal function. Basic studies have been proposed to compare alternative repair techniques, using the following new assessment methods:

1. Quantification of the monophasic compound action potential—an invasive method;
2. Estimation of the distribution of axonal conduction velocities from the compound action potential without knowledge of single

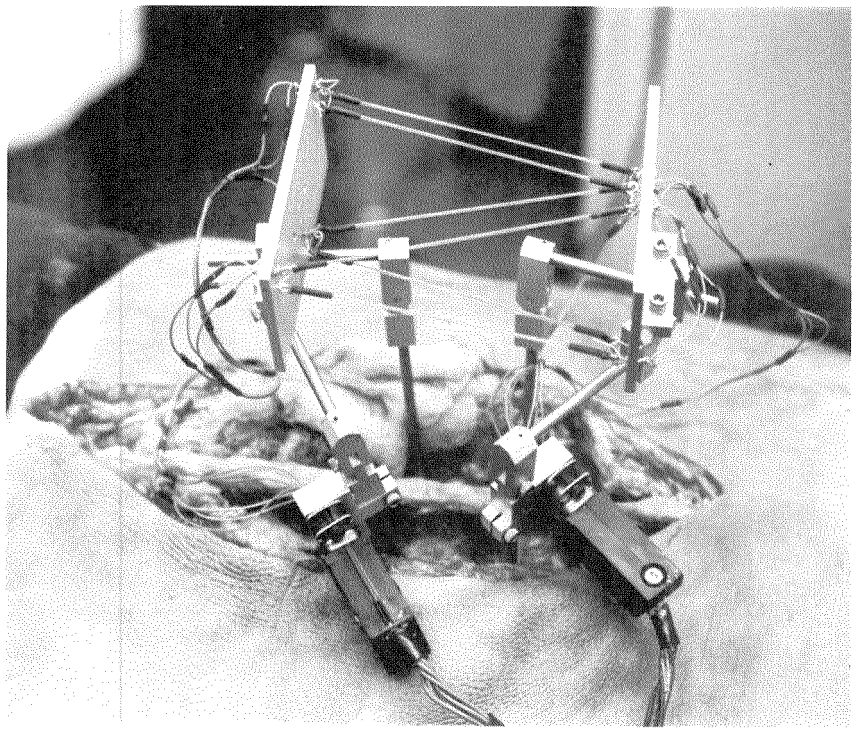

FIGURE 4.—Instrumentation to Measure the Effectiveness of Various Dorsal Lumbar Spine Stabilization Methods. A new force/displacement transducer has been developed to objectify the search for more effective ways to stabilize the disrupted dorsal lumbar spine. The device is shown being used to evaluate alternative stabilization methods based on carefully controlled human cadaver studies. The project is lead by Robert Piziali, Ph. D., responsible engineer, Donald Nagel, M.D., responsible physician, and Inder Perkash, M.D., sponsoring physician.

fiber action potential properties—a non-invasive method; and

3. Axonal conduction velocity distribution measurement based on non-invasive collision neurography (Fig. 5).

Goals include:

1. Verification of physiological assumptions made by the non-invasive methodologies;
2. Development of instrumentation suitable for clinical and surgical use;
3. Longitudinal studies of axon regeneration using non-invasive measurements; and
4. Identification of new surgical procedures for peripheral nerve reconstruction.

### 4. Information System

Visually impaired persons are severely disadvantaged with respect

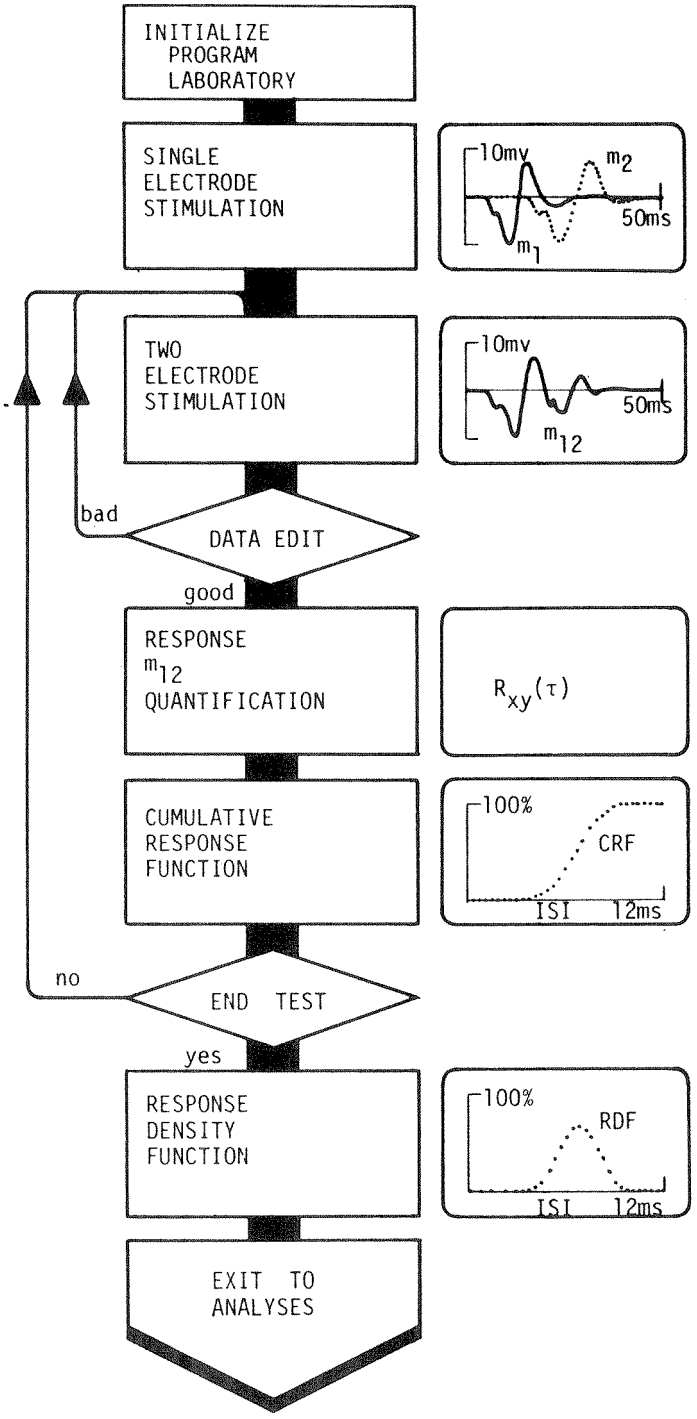
INITIALIZE
PROGRAM
LABORATORY
SINGLE
ELECTRODE
STIMULATION
10mv
m2
50ms
m1
TWO
ELECTRODE
STIMULATION
10mv
50ms
m12
bad
DATA EDIT
good
RESPONSE
m12
QUANTIFICATION
Rxy(τ)
CUMULATIVE
RESPONSE
FUNCTION
100%
CRF
ISI
12ms
no
END TEST
yes
RESPONSE
DENSITY
FUNCTION
100%
RDF
ISI
12ms
EXIT TO
ANALYSES

to personal information storage and retrieval. This situation handicaps them in the pursuit of educational, professional, and recreational goals. It is proposed that an advanced, but affordable, microcomputer system can be developed to fulfill the following information manipulation needs:

1. Text processing (input and editing);
2. Data storage and retrieval;
3. Computer programming;
4. Telecommunications usage; and
5. Note-taking (remote from the work station).

The key to accomplishment of these goals lies in the interface between a user and his/her microcomputer system (Fig. 6). Fortunately the information processing power of the computer can do much to reformat visually displayed information, such as the newspaper, into forms more useful to the visually impaired. Importantly, information generated by the user can also be translated into a form useful to the sighted. In this way the user can remain within the normal working environment of the sighted.

Basic research must be done to define the structure of an operating system appropriate to these goals. Development work will investigate the following major components of the system:

1. Input devices and protocols;
2. Information processing, storage, and retrieval; and
3. Output devices and protocols—
   a. for the visually impaired, and
   b. for the sighted.

Greg Fowler, a blind Ph. D. candidate in electrical engineering at Stanford, is now using a large computer facility to simulate alternative features for subsequent microcomputer systems. Greg does the computer programing with a standard display terminal and Optacon reader. He is supervising the installation of a voice output system, and will be responsible for programing it as an alternative output mode which might be useful to both sighted and visually impaired users.

FIGURE 5.—Assessment of Peripheral Motor Nerve Function Based upon Collision Neurography. New methods of peripheral nerve function assessment are being used to evaluate alternate nerve reconstruction techniques. One of these assessment methods is illustrated here. The approach is based on the use of noninvasive electrical stimulation of the peripheral nerve (typically at the wrist and just above the elbow). The time interval between paired stimulii is varied and the electrical response of the innervated muscles is quantified such that a minicomputer can be used to reconstruct the distribution of motor axon conduction velocities present in the nerve. Other assessment techniques are being used to measure sensory nerve function. The project is led by Larry Leifer, Ph. D., responsible engineer, and Vincent Hentz, M.D., responsible physician.

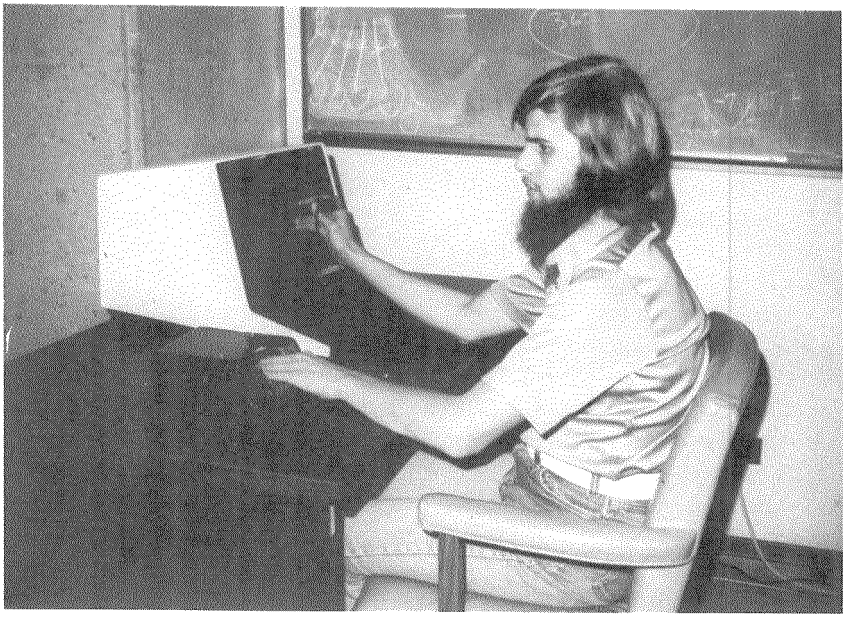

FIGURE 6.—Development of a Personal Information System for the Visually Impaired. Blind graduate student, Greg Fowler, is shown using an Optacon to read directly from a computer display terminal. He is currently performing simulation studies to determine the specifications for devices and programs which will allow visually impaired persons to use and maintain a complete personal information system. The information system is projected to be built on current microcomputer technology and is intended to allow its user to perform workstation tasks equivalent to those performed by sighted persons at rather standard desks. The system will include a portable unit with which the user can take notes and then include these notes in his/her office information base. This project is led by John Linvill, Ph. D., responsible engineer, and Greg Goodrich, Ph. D., responsible psychologist.

### Student Pilot Project examples

Tables 2 and 3 list the student projects which have in some measure been supported by the RER&D program at Stanford. These projects are highly exploratory. Academic goals have first priority. But, these hardworking students can and do make an important contribution to the center's development program. A Bachelor's degree candidate will, typically, work a minimum of 12 hours per week. Five weeks are spent on need definition (60 hr minimum). Ten weeks are then spent on the design and development of a working prototype (120 hr, minimum). Engineering design Master's degree candidates spend a minimum of 16 hours per week on the project for 36 weeks and typically work in groups of three. Product design Master's degree candidates invest at least 24 hours per week for 36 weeks and typically work alone with outside consultants. A three member team will con-

TABLE 2.—*Student Pilot Projects in Academic Year '77-'78*

(BS) = Bachelor of Science Candidate
(MS) = Master of Science Candidate
(MFA) = Master of Fine Arts Candidate

1. A Kitchen Storage System for Paraplegics, by David Lima (MS)
2. A Modular Seating and Mobility System for the Severely Disabled, by Jonathan Flamm (MFA), Figure 7
3. Two-Handled Eating Utensils, by Gregory Shaw (MS), Figure 8
4. Servo Controlled Arm Exerciser for Spasticity, by Peter Axelson (BS), Ken Allen (MS), and Tom Woo (MS), Figure 9
5. Quadriplegic Reacher, by Joni Bessler (BS), Figure 10
6. Quadriplegic Reacher, by David Uken (BS), Figure 10
7. A Multiple Dose Pill Packager for Drug Consumption Control, by Carl Stern (BS), Tamiko Thiel (BS), and William Shriver (BS)
8. An Electronic Games Table for Quadriplegics, by James Holmes (BS)
9. Music Synthesizer Interface for the Physically Disabled, by Peter Aschenbrenner (BS),
10. A Personalized Communication Device for a Stroke-Impaired Adult, by Peggy Christianson (BS)

TABLE 3.—*Student Pilot Projects in Academic Year '78-'79*

(BS) = Bachelor of Science Candidate
(MS) = Master of Science Candidate
(MFA) = Master of Fine Arts Candidate

1. Robotic Arm Controller for Quadriplegics, by Paul Justl (MS), Steve Tipton (MS)
2. Upper-Limb Ergometer for Chair and Bed Bound Individuals, by Mike Barker (MS), Jim Dornbusch (MS), Humberto Rincon (MS)
3. Body Pressure Distribution Visualization and Measurement, by Tom Kinney (MS), John Kirby (MS), Mary Springhorn (MS)
4. A Walk-in Bathing System for Elderly Individuals, by BoFat Chan (MFA)
5. Memory Rehabilitation Training System, by William Shriver (MS)
6. A Wheeled Mobility Aid for the Institutional Environment, by David Willis (MFA)
7. A "Smart Hand" for the Unimate 250 Robotic Arm, by Rickson Sun (MS)
8. Additional projects are pending

tribute well over 1728 man/woman hours to the project at no cost to the VA. However, VA support for materials and fabrication costs is vital to allow students to get beyond paper studies into the building of real devices and the evaluation of these devices in the hospital and outpatient environment. Both undergraduate and graduate students are expected to:

1. identify the user;
2. identify the need;
3. define a specific problem within the need area;

4. Define the performance criteria;
5. Design alternative solutions;
6. Develop one design into a working prototype; and
7. Obtain user evaluation of the prototype; and
8. Document the project.

All project work is based upon the cardinal questions:

1. WHO needs something?
2. WHAT do they need?
3. WHY?
4. HOW should it work?
5. HOW does it work?

Of course some of these projects do better than others. Four successful examples are given here to illustrate the potential of student involvment in the RER & D program.

*A modular seating system* was developed during the academic year '77-'78 (Fig. 7). Work was performed by Jonathan Flamm, product design master's degree candidate, with technical assistance from Wallace Motloch of the Children's Hospital at Stanford. The seating system was designed to satisfy the postural stabilization requirements of palsied and spinal cord injured individuals. The initial prototype was scaled to children. The project was undertaken because secondary disabilities are incurred by these people if correct posture is not maintained. Current seating systems were found to be costly (over $1500 per fitting), structurally inadequate, complex, and/or aesthetically unacceptable. The desired solution was seen to require modularity for cost reduction, postural flexibility, and cleanliness. The prototype accomplished the design objectives and won first prize at the 6th International Conference on Devices for the Disabled, Student Design Competition (Houston, June '78). Subsequent to graduation, Mr. Flamm was employed by the Everest and Jennings Corporation to further develop the design for the consumer market.

*A two-handled eating utensil* was developed during the academic year '77-'78 (Fig. 8). Work was performed by Gregory Shaw, product design master's degree candidate. The eating device was designed to facilitate independent self-feeding for individuals lacking sufficient unilateral motor control to accomplish the task. The project was undertaken following a survey of existing eating assist devices which indicated that these devices were either unuseful and/or expensive and cumbersome.

The guiding principle of the design approach was simplicity. The prototype was based on the observation that when two hands were used to eat a sandwich, the degree of control was far better than when eating with single-handed utensils. The two-handled spoon/knife

FIGURE 7.—A Modular Seating System for the Severely Disabled. This seating system was designed to satisfy the postural stabilization requirements of palsied and spinal cord injured individuals. The initial design studies have been scaled to children, and much of the work was done in conjunction with staff of the Children's Hospital at Stanford Rehabilitation Engineering Center. The modular shell and cushion system promises to reduce manufacturing costs while providing increased postural flexibility and easy cleaning. Jonathan Flamm, Master of Fine Arts candidate, was the responsible designer. He received first prize in a student design competition at the 6th International Conference on Devices for the Disabled (Houston, June '78).

achieved the design objective with deceptive simplicity and won second prize in the student design competition at the 6th International Conference on Devices for the Disabled (Houston, June '78). The design is now being refined for production.

*A servocontrolled arm exerciser* was developed during the academic

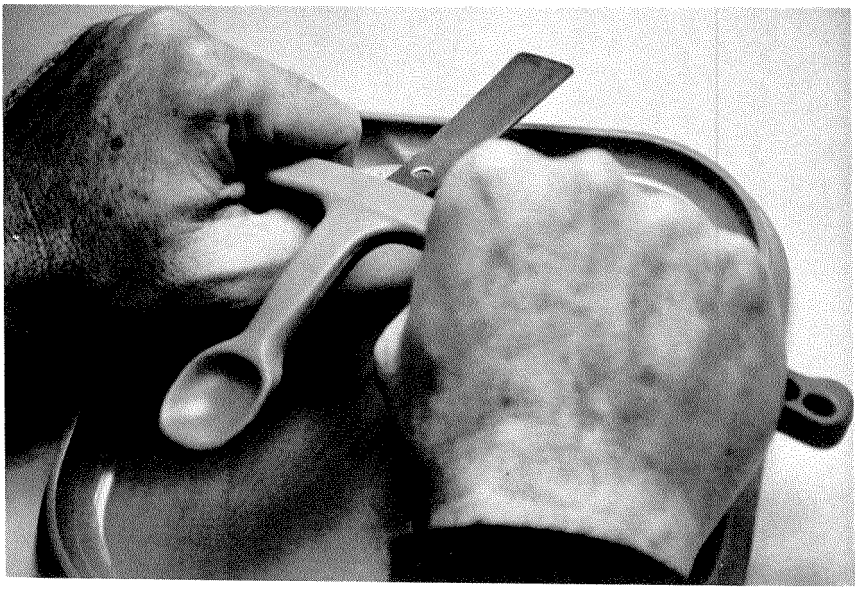

FIGURE 8.—A Two Handled Eating Utensil for Persons with Upper Limb Movement Disorders. This simple eating device was designed to facilitate independent self feeding for individuals unable to accomplish the task with traditional hand-held utensils. The design is based upon an observation that sandwiches, held with two hands, could be eaten by many persons who could not manage spoons and forks. The device is made of a soft plastic to avoid injury. Greg Shaw, Master of Science in Product Design candidate, was the responsible designer. His project won second prize in a student design competition at the 6th International Conference on Devices for the Disabled (Houston, June '78).

year '77-'78 by three members of an engineering design master's project team; Peter Axelson, Ken Allen, and Tom Woo (Fig. 9). The device was designed in collaboration with Dr. S. Berrol of the Santa Clara Valley Medical Center and Dr. I. Perkash of the PAVAMC Spinal Cord Injury Service. The project was undertaken in order to provide a tireless exerciser which would be sensitive to the patient's capability. The device is programed such that loads experienced by the user are always at the threshold where maximum learning and conditioning are accomplished. No equivalent device was found in a survey of existing technology. The prototype accomplished its primary functional objectives. The device is now undergoing clinical trials under the direction of Dr. Berrol.

*Two body-powered reachers* were developed during the spring of '78 by product design undergraduates, Joni Bessler and David Uken (Fig. 10). Their need-finding study indicated that most quadriplegics with residual upper-limb function were unable to retrieve objects from the

FIGURE 9.—A Servocontrolled Exerciser for Spastic Upper Limbs. This device was designed to provide a tireless exerciser which would be responsive to the patient's capability. It can be programed such that loads experienced by the user are always at the threshold where maximal learning and conditioning are accomplished. The range of motion can be set to prevent muscle or tendon damage. The design team included Peter Axelson (BSME candidate), Ken Allen (MSME candidate), and Tom Woo (MSME candidate). Peter Axelson demonstrates use of the exerciser.

floor and shelves. It was observed that only wrist extension was present for most of these people and that all existing reach-assist devices required grasp. The design objective held that a simple, user-actuated device should be wheelchair-mounted and should allow one to pick up coins, cigarettes, and objects as massive as a full soft drink can. Two devices were built. One achieved the design objective using do-it-yourself technology. The second device achieved the same objec-

tives with additional features and required commercial fabrication technology. The best device is now seen to be a combination of design features found in both of the student prototypes. A second generation reacher is now being produced preparatory to seeking commercialization of the device.

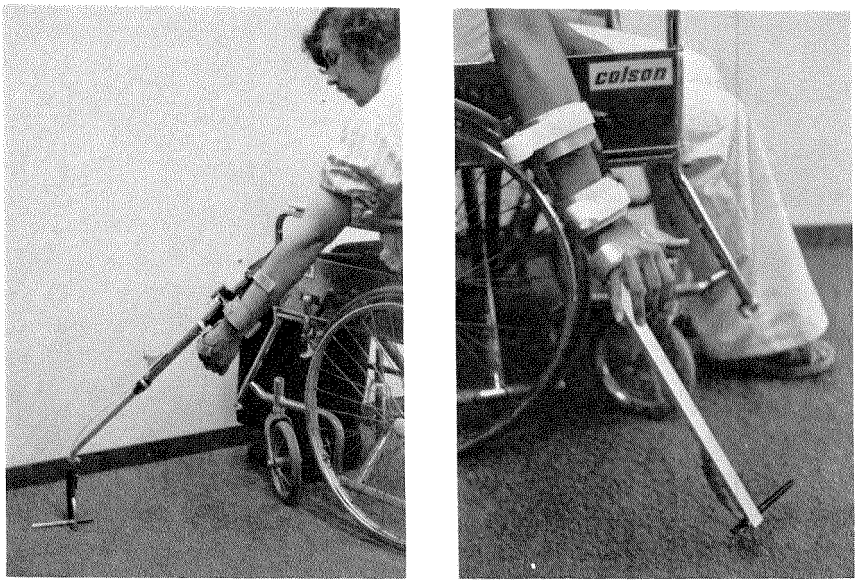


FIGURE 10.—A Reacher for C5-C6 Quadriplegics with Wrist-Extension Capability. This body-powered reacher has been designed to allow individuals with wrist extension to grasp objects from the floor and/or remote shelves. Two versions of the device are shown here. The design on the left was done by David Uken, Bachelor of Science in Product Design (BSPD) candidate. The design on the right was done by Joni Bessler, also a BSPD candidate, who identified the need for such a device. Both mechanisms are capable of picking up coins and beverage cans. The reacher is transported in an easy-access bracket behind the wheelchair.

## Summary

The Veterans Administration has established a Rehabilitative Engineering Research and Development Center (RER&D Center) at its Palo Alto Medical Center. The RER&D Center will operate in close affiliation with the Stanford University School of Engineering and School of Medicine. The center has a broad mandate. It is a new venture and one encouraged to test new approaches to the problem of bringing technology to the aid of physically disabled persons.

---

**Editor's note:** Our first report from the VA's new RER&D Center at its Hines, Illinois, Medical Center is scheduled for the next issue of BPR. However, a progress report on work recently transferred to the center starts on page 72 of this issue.

## Prosthetics Research

**Northwestern University, Prosthetics Research Laboratory**
**Room 1441, 345 East Superior Street, Chicago, Illinois 60611**
**Robert G. Thompson, M.D., and Dudley S. Childress, Ph. D.**

### Powered Arm For Shoulder Disarticulation Levels

A Ph. D. candidate has begun studies related to the control of a multifunctional prothesis. During the course of this study, the following experiments are to be performed:

1. Analyze the ability of normal persons to control elbow flexion/extension and wrist pronation/supination.
2. Analyze the ability to control shoulder elevation/depression and abduction/adduction.
3. Analyze the ability to relate the above movements to elbow and wrist motion in a prosthesis.
4. Compare extended physiological proprioception (EPP) position-servo control to simple on/off and velocity control.

An orthosis with electrogoniometers at the wrist and elbow has been constructed to being the study as stated in item 1.

### Lightweight BK Prosthesis

One amputee has been fitted with a low density polyethylene/foam below-knee prosthesis. The polyethylene socket did not have the rigidity to withstand the loads exerted during the stance phase of ambulation; therefore, its use was discontinued.

A second polyethylene/foam prosthesis has been fabricated similar to the first except that polypropylene has been used for the socket. No clinical results are available as yet.

The Otto Bock SACH foot 1S19 is now used for the flexible forefoot with the lightweight prosthesis. Because the keel is already reduced in size, the prosthesis fabrication time is diminished.

### Preparatory Lower-Limb Prosthesis

Intermediate BK prostheses have been fitted to two more subjects bringing the total fitted to six. Early failure of the Aquaplast® material, due to age-hardening and subsequent cracking, appears to have been overcome by the manufacturer. The Aquaplast® sockets now last the full term of the intermediate prosthesis without cracking. Work continues on reducing fabrication time and improving suspension of the prosthesis.

### Synergetic Hook

The first prototype of Model II has been completed, incorporating all of the changes mentioned in previous reports. To diminish battery drain, the drive current to the "fast" finger will be cut off by a motor-

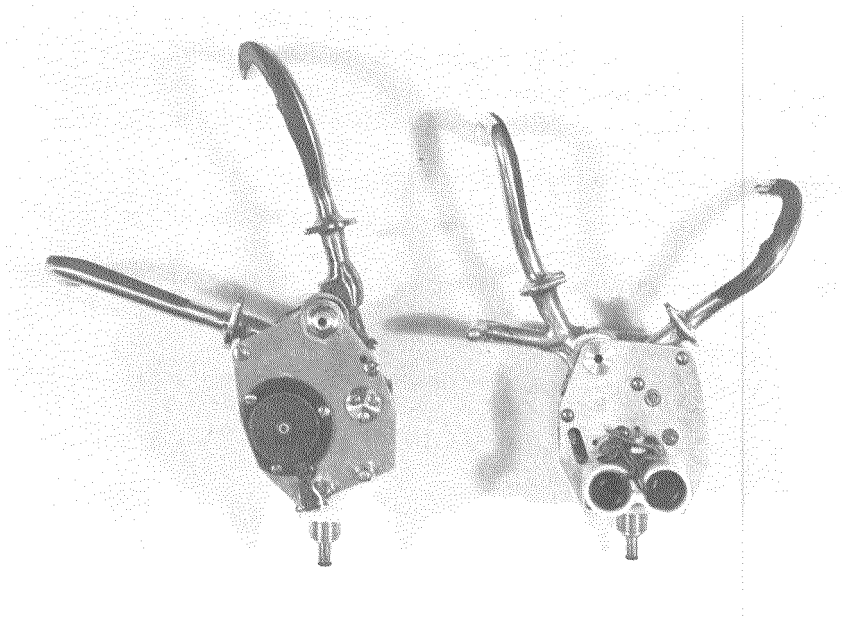

FIGURE 11.—Northwestern University Synergetic Hook Model II, at left and Model I, at right.

rotation detector. Two more units, one left and one right, are being constructed for clinical evaluation. The changes made between Model I and Model II are shown in Figure 11.

Design work has begun on Model III, which will be identical to Model II except that the fingertips will be removable. This will give the user several possible options, such as which tip type to select for working with different materials and shapes.

**Fundamental and Applied Research Related to the Design and Development of Upper-Limb Externally Powered Protheses**

**University of California, Los Angeles**
**School of Engineering and Applied Science**
**Biotechnology Laboratory, 3116 Engineering 1**
**Los Angeles, California 90024**
**John H. Lyman, Ph. D., and Amos Freedy, Ph. D.**

### Microprocessor-Based Upper-Limb Project

Progress on this project includes the development of a new harnessing technique to allow reliable placement of nine EMG electrodes on the residual limb and shoulder girdle of an above-elbow amputee.

A lightweight, two-way-stretchable material was used to fabricate a "T-shirt" on which the EMG electrodes could be attached. The material provides elastic pressure on the electrodes, and allows continuous contact with the skin during arm movement, as well as during muscle contraction.

The first harness prototype demonstrated its potential, and a second model has been designed and is currently being tested. It is intended to achieve the following advantages:

1. Less donning and doffing, allowing the amputee to harness himself without help;
2. Easy removal of the electrodes so that the "T-shirt" may be washed regularly;
3. Material with the same elastic properties as the earlier model but with a coarser weave, to allow proper ventilation to the torso; and
4. EMG electrode wires packaged in a reliable and cosmetic manner.

In parallel with this work, a new technique has been developed to increase the information content extracted from the myoelectric signal, and thereby to improve the reliability of the movement decisions of the pattern-recognition algorithms. The technique, Auto Regressive Integrated Moving Average (ARIMA), enables provision of reliable myoelectrically-based information, independently of certain subject variations and muscle fatigue states. Interaction of the above parameters has been defined, as has crosstalk of the adjacent muscles, making possible optimal electrode placement.

The ARIMA technique is currently implemented and is being tested on our laboratory system. Long-term objectives are to include it in the clinical system.

### Functional Neuromuscular Stimulation of Limbs

Work to date has shown that fine proportional control of paralyzed muscles can be accomplished by the employment of the Selective Electro Block (SEB). The SEB pulse amplitude, width, and frequency were shown to be possible control parameters of muscle force level. Pulse widths in the range of 10–700 microseconds and pulse amplitudes of several milliamperes (depending on electrode-nerve resistance) are appropriate. Pulse rate of 100 to 600 pulses per second also showed linear relationships to muscle force. Dynamic control was feasible by SEB pulse amplitude and width; however, dynamic control using SEB frequency showed erratic and unreliable response, and should be investigated further.

# Control of an Artificial Upper Limb in Several Degrees of Freedom

**Department of Electrical Engineering**
**Illinois Institute of Technology, Chicago, Illinois 60616**
**Daniel Graupe, Ph. D.**

**Orthopedic Surgery Department**
**Loyola University, Chicago, Illinois**
**John Fisk, M.D.**

*Both investigators are also attached to the VA Rehabilitative Engineering Research and Development Center, Hines, Illinois*

## Multifunctional Myoelectric Actuation of Above-Elbow Prostheses via Time Series Analysis and Classification Methods using Microprocessor Hardware

This report covers the period of July 1, 1978 to December 31, 1978 and extends previous work by the first author performed while on the faculty of Colorado State University, prior to his move to Illinois Institute of Technology and his joining, with the second author, the VA Rehabilitative Engineering Research and Development Center, Hines, Illinois.

The main aspects of the work over the first 6 month period of this project at its new location were as follows:

1. Interfacing the microprocessor actuation system with a modified VAPC arm, containing elbow, wrist and prehension motors.
2. Enhancing system reliability to beyond the success rate of 90 percent that had been achieved previously (1).

Specifically, the work on interfacing the system with a VAPC elbow-wrist-hand mechanism has now been completed via a newly acquired multi-channel digital-to-analog converter (DAC) system. Tests on the combined system have been performed at Illinois Institute of Technology, and once a laboratory has been allocated for this project at the VA Hospital at Hines, these tests are to continue there. Presently, the system is fully functional in that it enters the myoelectric signal from a single surface electrode pair (Motion Control, Inc., Salt Lake City, Utah) placed on the residual limb of the amputee. The signal then goes through an analog-to-digital converter (ADC) system to an INTEL 8080-based microcomputer system where its autoregressive (AR) parameters are identified on-line. These AR parameters are then compared with reference AR parameters in the computer's memory as obtained at a previous calibration mode for the amputee and for the same electrode location. A classification algorithm then decides if the presently identified AR parameters set belongs to any of the reference AR parameter sets, and if so to which, noting that each reference set uniquely belongs to a certain limb function.

Finally, the limb function thus classified is actuated once detected as above in the sense that the recognition decision by the microcomputer causes a signal to be sent through the DAC system to the appropriate motor of the VAPC arm to actuate one of the (presently 5) limb functions, namely: elbow flexion, elbow extension, wrist pronation, wrist supination and hold. Extension to 7 limb functions is mainly limited by lack of hardware. The major other remaining problem here is that we are still unable to use any newer microprocessor but are limited to the INTEL 8080 8-bit microprocessor purchased in 1975. Presently microprocessors which are faster by almost 2 orders of magnitude are available, which can be in 16-bit form to greatly enchance speed and accuracy. However, even present speeds fully justify clinical use of the system. Present actuation delays for the most reliable (99 percent success rate version) are of the order of 1 sec, which by a mere component change can be brought down to below 0.1 sec. Less reliable versions operate at 0.2 sec. delay but are not recommended due to their higher error rate.

Concerning success rate enhancement (i.e., enhancement of rate of correct actuation) this was brought up from some 90 percent to 99 percent by a complete revision of the training routine of the user and by rewriting the classification algorithm. This algorithm is now a recursive elimination algorithm with modified weights which allows very fast classification — 5 times faster than the one reported in (1).

To preserve 99 percent reliability while increasing the number of limb functions from 5 to the desired 7, a system with two surface electrode pairs is being investigated. In this system the classification base will be increased, with 3 parameter sets per function compared with corresponding sets obtained during calibration. The three sets are the AR parameters of the signals from each of the two electrode pairs, plus a cross parameter based on the cross covariance between those two signals (2).

It is believed that with the present success rate and with the completion of the arm-to-microcomputer-interface, the system is now ready for extensive and thorough clinical evaluation and then for use by amputees in situations where multifunctional reliable actuation at will is important, such as in cases of high bilateral AE amputees. Tests on cases of shoulder disarticulation will also be considered as will be the evaluation for diagnostic and other purposes, since once the information in the EMG signal can be reliably interpreted, above-elbow prostheses are not the only application for this method.

## References

1. Graupe, D. et al.: A Microcomputer System for Multifunctional Control of Upper-Limb Prostheses via Myoelectric Signal Identification, IEEE Transactions on Automatic Control, AC-23, (4) 538-544, 1978.

2. Graupe, D.: Identification of Systems, 2nd edition, R.J. Krieger Publishing Co., Huntington, N.Y. 1976.

### Spinal Cord Diagnostics based on Stochastic Signal Processing via Microprocessor Hardware to Enhance Evoked Potential Monitoring Speed and Reliability

This report covers work started in October 1978. It thus covers barely a 3 month period and we cannot report clinical findings as yet. Initial clinical test results are, however, expected to be available in the summer of 1979.

The main effort during the past 3 months was concerned with the design of interrogation signals for evoked potential spinal cord monitoring, noting that presently evoked potential interrogation signals are generated in what is mathematically an ad-hoc manner. This ad-hoc approach of selecting signal amplitudes and shapes implies that for any diagnostic conclusions one presently requires many hundreds or thousands of signals at intervals of the order of one second. Hence response information takes something of the order of an hour. Furthermore, this ad-hoc nature of the presently employed signals implies that evaluation of responses is very unreliable due to its implicit sensitivity to noise and other disturbing electric activities of the body, including seizures etc. Our approach is to overcome these problems by an optimal or a near-optimal design of the interrogation signal and of its processing such that the evaluation can be *firstly* very rapid (to be complete in the order of a few minutes) and *secondly* that response information will be insensitive to noise and other disturbances in a near-optimal fashion. For this purpose we employ signal design methods based on stochastic identification theory such as in (1) and (2) (for input design, i.e., design of interrogation signal shape and spectrum, and for stochastic response analysis). These have near-optimal filters built into them rather than relying on averaging techniques that made sense as long as processing was mainly analog or has employed only computationally weak digital circuits. We comment that our present approach is all to be implemented on a microprocessor system, whose software design and electrode interface have already been started.

### References

1. D. Graupe: Identification of Systems: 2nd edition, R.J. Krieger Publishing Co., Huntington N.Y. 1976.
2. D. Graupe: Time Series Analysis Applied to Adaptive Filtering, R.J. Kriger Publishing Co., Huntington, N.Y 1979.

## Position Control of Above-Elbow Prostheses
## Department of Engineering Design and Economic Evaluation

**Engineering Center OT 6-34**
**University of Colorado**
**Boulder, Colorado 80309**
**Lawrence E. Carlson, Ph.D.**

The overall goal of this project is the design and evaluation of a method for implementing Extended Physiological Proprioception (EPP) for proportional position control of the VA electric elbow, which is normally controlled in an on/off velocity control mode. EPP utilizes small (2 cm) relative body displacements, generated with a control harness, to control the elbow so that there is a linear correlation between input excursion and output elbow position. A mechanical feedback in the form of a very small, flexible cable creates an "unbeatable servo;" i.e., the input is constrained by the output and can only be generated as fast as the output motion allows. This capitalizes on the amputee's proprioceptive feedback and provides a feel for the motion of the prosthesis.

The components required to implement EPP include a small transducer (comparable in volume to the conventional VAPC switch), feedback cable and housing, a small circuit board, and the usual battery. The transducer is mounted in the control harness, while the battery and circuit board fit in the space above the elbow.

During the period of this report, the system was evaluated in the laboratory by a 25-yr old male amputee with a high-level above-elbow amputation leaving an 8-cm residual limb. Two tests were devised to compare the EPP and velocity control methods: a tracking test and a blind positioning test.

The tracking test consisted of displaying a pseudo-random command signal on a two-channel recorder and requiring the amputee to follow it by moving the elbow to drive the second pen (Fig. 12). A digital computer generated the signal and recorded the average error.

The blind positioning test sought to determine the amputee's ability to position the prosthesis without visual feedback. In this test, the amputee flexed the elbow to an intermediate position and then, with eyes closed, repeatedly extended the elbow and attempted to return it to the initial position. The computer monitored the difference between the target and test values and computed the average error and standard deviation of the error (Fig 13).

Both tests were conducted several times a week over a period of several weeks, in order to establish learning curves for EPP (position) and VAPC (velocity) control. The order of tests was alternated to eliminate bias due to practice time.

In both tests, the position-control method performed consistently better than velocity control (Figs. 14 and 15). In the tracking test, part

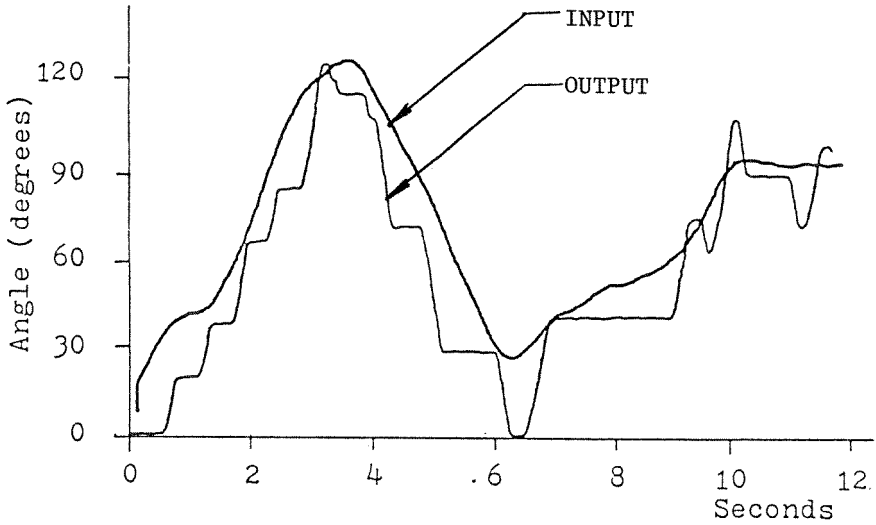


VAPC

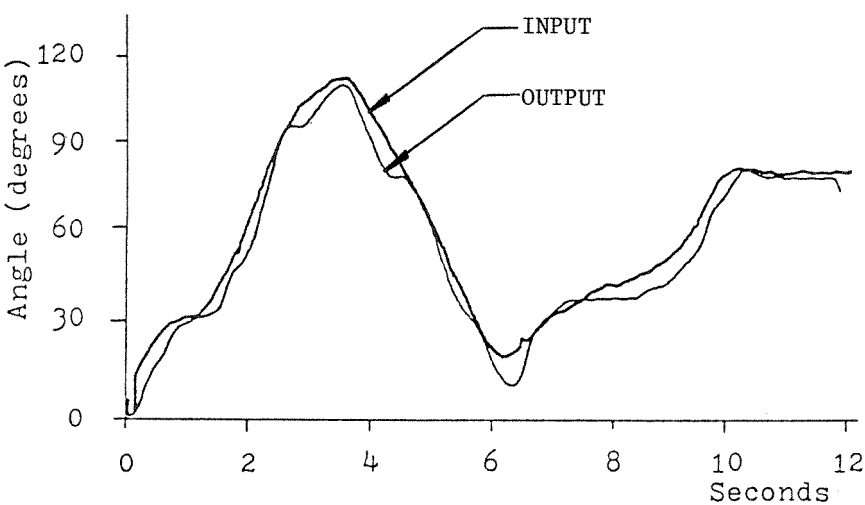


Position Control

FIGURE 12.—Typical tracking test; 11 results.

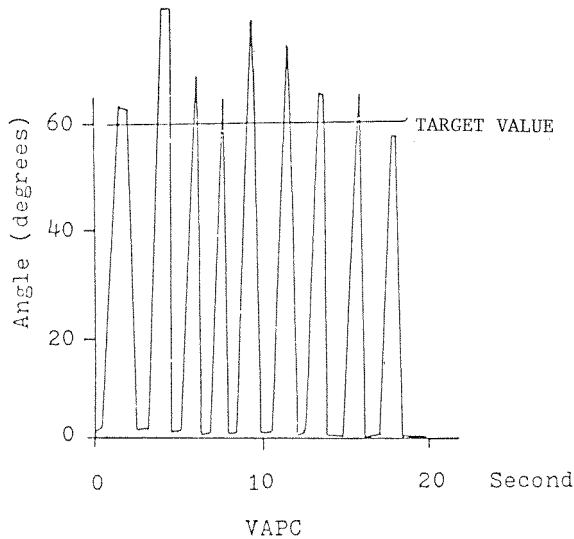


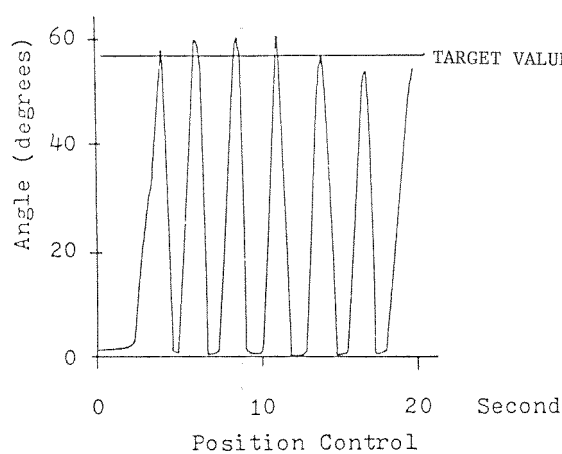


FIGURE 13.—Blind positioning test.

of the result may be attributed to the difference between proportional and on/off control. Later tests with a proportional velocity system showed much closer results, although the position control still outperformed velocity control. In the blind positioning test, position control was better than either on/off or proportional velocity control by almost a 2:1 margin. This is attributed to the ability of EPP to provide non-visual cues of prosthesis position.

Laboratory tests such as these are useful, but they provide only limited information. Therefore, future tests will involve fitting EPP

systems to amputees and allowing them to use the prostheses in their daily activities outside the laboratory. This should provide meaningful, although subjective, feedback.

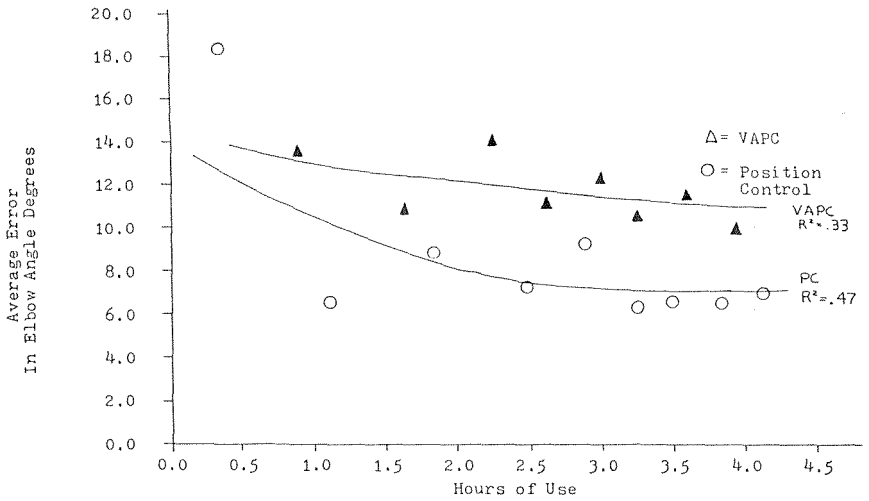


FIGURE 14.—Learning Curve—tracking test.

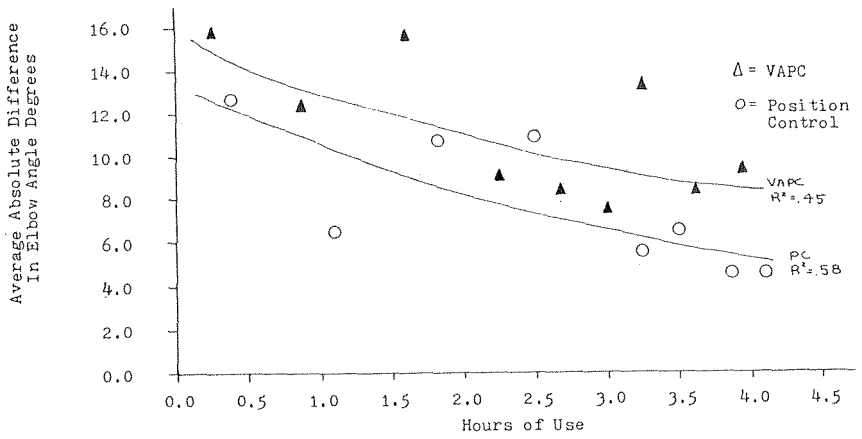


FIGURE 15.—Learning Curve—blind positioning test.

**Interdisciplinary Development and Evaluation of Externally Powered Upper-Limb Prostheses and Orthoses**
**Applied Physics Laboratory**
**The Johns Hopkins University**
**Johns Hopkins Road**
**Laurel, Maryland 20810**
**Woodrow Seamone and Gerhard Schmeisser, Jr., M.D.**

During the reporting period, July–December 1978, the research program at Johns Hopkins under Veterans Administration sponsorship was concentrated on the continued development of an integrated wheelchair/robotic-arm/worktable system for the high spinal-cord-injured person. Clinical tests with quadriplegic volunteers were continued on the basic elements of the system. The powered wheelchair for this system employs a low-profile chin controller and retractable mouthstick arrangement. Two wheelchairs equipped with this model of the chin controller have undergone clinical testing by three quadriplegics. The interface which permits this wheelchair also to control the robotic-arm/worktable system was tested in the laboratory to demonstrate basic operability, but has not been clinically evaluated. An advanced model of the microprocessor controlled robotic-arm/worktable system is in final software checkout and testing, and is expected to be in clinical tests early in the 1979 calendar year. Progress during the reporting period includes engineering refinements to many elements of the system, and continued clinical testing.

### Chin Controlled Wheelchair with Dual Mode Capability

This chin controller is a low-profile design aimed at reducing the mechanism in front of the user's face, and allowing full compatibility with the use of the mouthstick. This controller is shown in Figure 16 in its normal wheechair controller position. The control principle embodied in this controller is to use vertical displacement of the chin for proportional control of wheelchair torque, and lateral chin motion to control steering. A microswitch located on the chin lever allows the user to select reverse mode when the chin lever is in its non-depressed position. When the chin lever is not used for control, it may be pushed aside by the user (Fig. 17). This gives the user a full range of head motion, to allow use of the mouthstick to perform certain tasks.

Three important engineering design changes were made to the chin controller during this reporting period. One change, which is aimed at cost reduction in manufacture, is the use of optical sensors to sense the two axes of motion. This transducer arrangement using low-cost optical sensors is shown in Figure 18. The requirement for a precision potentiometer/gimbal system is eliminated by this design change.

A second engineering change relates to electronic circuitry changes in the interface electronics. A 1 Hz filter was added to the motor torque control channel to minimize the unwanted high-frequency velocity perturbations caused by bobbing head motions on irregular grades. A second electronic filter is activated when maximum steering signals are initially commanded. This second filter is controlled by a one-shot multivibrator and provides filtering during the start-up

FIGURE 16.—Electric wheelchair with low-profile chin controller and retractable mouthstick holder.

transient but does not affect normal steering. This will minimize acceleration response during initial hard turn commands.

A third change made to the chin-controller electronics provides a gain change as a function of selection (chin motion up) of low or high torque for the E & J powered wheelchair.

The net result of these engineering changes provides a chin control system which gives smooth wheelchair motions and is easily controllable. Five additional wheelchairs will be modified and evaluated during the calendar year 1979. Two wheelchairs with the low-profile chin controller (potentiometer version) have been in clinical testing by quadriplegics for over 6 months with excellent results. These clinical results are briefly summarized.

## Clinical Experience

All of the evaluators are approximately C-4 level quadriplegics as a

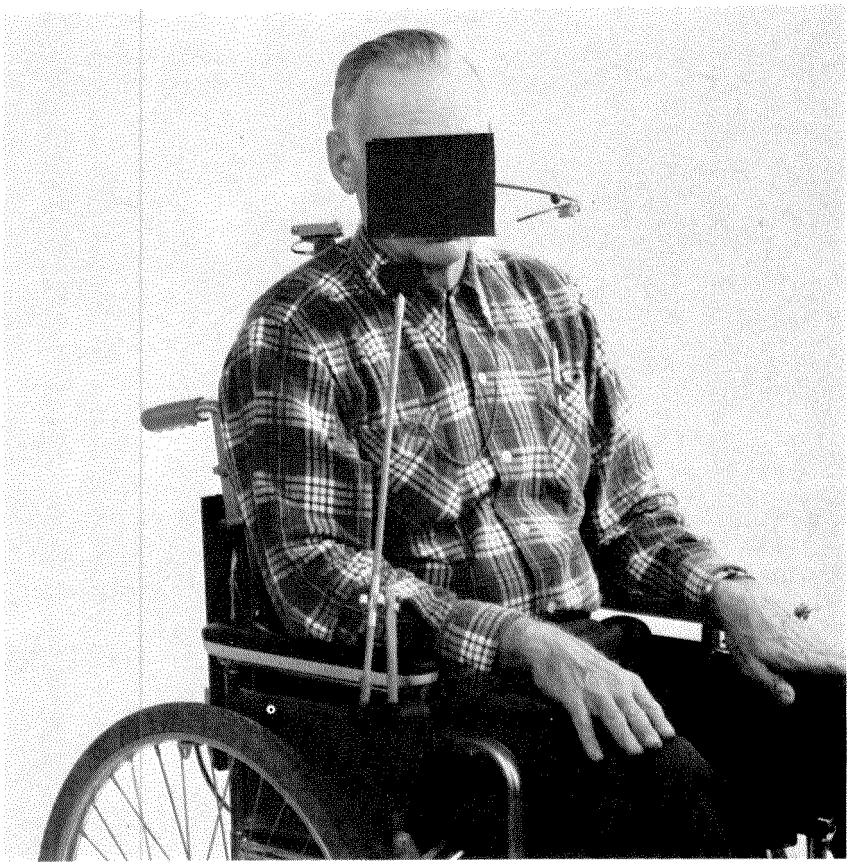

FIGURE 17.—Chin controller in park position. Mouthstick holder in normal use position.

result of spinal cord trauma. All are unable to operate a manual joystick controller. Two have been described in earlier BPR reports, and their evaluation of the early model of chin-controller mounted on a powered Invacare model wheelchair during the previous 6 months was described in the last report—and resulted in the changes mentioned.

One of these individuals was familiarized with the powered Everest and Jennings wheelchair under direct observation of the development and evaluation team, travelling outdoors about the grounds of his nursing home, on grass, paved and unpaved surfaces, and up and down standard wheelchair ramps, as well as indoors about the corridors and rooms. This wheelchair was then left with this individual for his daily use and personal appraisal. After 10 days, his performance was recorded on videotape, segments of which were presented at the Interagency Conference on Rehabilitation Engineering at the

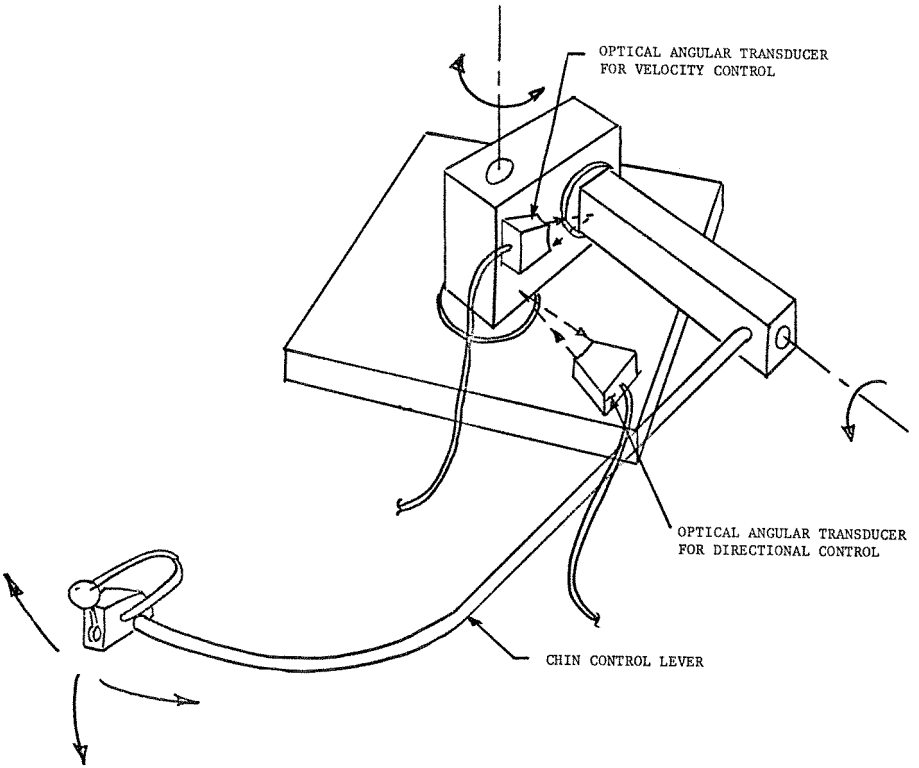


FIGURE 18.—Optical transducer arrangement for chin controller.

Sheraton Park Hotel in Washington, D.C., September 4–7, 1978. This quadriplegic continued to use this wheelchair daily until it was retrieved for assignment to a second quadriplegic approximately 2 weeks later.

Familiarization of the second quadriplegic with this wheelchair took place both within and about the grounds of the laboratory and also included negotiation of inclined surfaces, roadways, sidewalks, negotiation of doorways and corridors, etc. Subsequently, this individual was assigned to this wheelchair for regular use about his home and about the office and loading areas of his moving and storage company. Approximately ten days later, his performance with the wheelchair was evaluated at his place of business by the development evaluation team. A problem of moving his chin control lever far enough from his face in its rest position to permit use of a telephone operator's earphone/microphone combination was noted and solved by adjusting the park position of the controller and adding an extension to enable retrieval by neck extension. This wheelchair was re-

trieved for demonstration at the Interagency Conference and then was returned to the same individual for more prolonged evaluation. With further use, the aforementioned need for improved turn control was noted and the system was recalled for corrective modification as described earlier in this report.

The third evaluator is a 17-year-old C-4 quadriplegic. He sustained his injury during the early part of the report period. Cervical spine fusion was performed and protected with a halo and subsequently a cervical collar. He was familiarized with the powered Everest and Jennings wheelchair and low-profile chin controller under observation of the development and evaluation team approximately four months post-injury, while still in the hospital and while still regaining cervical spine motion. At the time of familiarization, he had not regained more than about 50 percent of normal cervical spine motion, but was able to operate the chin controller, wheelchair and retractable mouthstick mechanism to the extent of design limits.

All three evaluators remain enthusiastic about the equipment and anxious to have the electric wheelchair with low-profile chin controller for regular use.

### Retractable Mouthstick Holder

A new aspect of this chin-controlled wheelchair is the addition of a motorized mouthstick holder (Fig. 6). It is well known that one of the more useful tools for many high-level quadriplegics is a mouthstick. It provides him a means of manipulating pages of a book, electrical switches, TV pushbutton controls, telephones and other similar devices. In order to make the mouthstick available to the quadriplegic at his command, yet out of the way when not being used, the system under development at Johns Hopkins employs a mechanized mouthstick holder mounted on one arm of the wheelchair. This system is motorized and is activated by the chin controller at one of its extreme lateral positions. The mouthstick is shown in Figure 16 in its storage position—approximately parallel to the user's arm and within the envelope of the wheels of the wheelchair. Upon command by moving the chin controller to the extreme left and slightly downward, the mouthstick is automatically moved into its use position (Fig. 17). As with the previous two-piece mouthstick design utilized in the robotic-arm/worktable system, the longer mouthstick may be utilized for tasks such as turning pages of a book, whereas the shorter length may be used for typing or touch-tone dialing the telephone.

The chin controller and mouthstick holder are designed as a mutually compatible system. Clinical tests are planned to further evaluate this concept. This wheelchair controller design is also compatible for control of the JHU robotic arm by suitably driving the wheelchair into proximity of the robotic-arm/worktable, and utilizing an infrared

beam to transmit control signals from the chin controller to the robotic arm input sensor. This feature had previously been described in BPR 10-30, Fall 1978, issue of the Bulletin of Prosthetics Research. This coupling feature will be incorporated on all the latest robotic arm models under development at Johns Hopkins.

### Robotic Arm/Worktable System

In September 1977, the first APL/JHU microprocessor-controlled robotic-arm/worktable system was furnished to a quadriplegic for testing. Over 15 months of clinical test time has now been accumulated and results from these tests demonstrated the practicality of this approach. Appropriate engineering refinements obtained from these clinical tests have been incorporated into a later model now undergoing final software and hardware validation. This improved model features a display panel which is easier to use and includes a keyboard to allow the user or an attendant to easily preprogram or change the program for selected tasks. Packaging has been improved by the use of a ribbon multiwire flat cable which has eliminated the external wire harness from the robotic arm to its power supply. This model represents a prototype of an advanced microprocessor controlled robotic arm. A third unit currently being tested at UCLA will be modified to incorporate the features of this model to expand the clinical data base for the APL/JHU robotic-arm/worktable system.

### Future Plans

Clinical testing of assistive devices for the high spinal-cord-injured will be continued in two directions. One approach will utilize the powered wheelchair with the low-profile chin controller and compatible pop-up mouthstick arrangement, in combination with various simple non-mechanized worktable arrangements. This should provide capability for reading, typing, playing some games, and should allow operation of unmodified electrical switches and similar devices capable of being operated by a mouthstick. The second approach will use the same wheelchair configuration but with the robotic-arm/worktable arrangement. Planned clinical evaluation of three systems for each approach will help assess the relative merits of each system in a practical clinical environment, and will help determine the factors involved in selecting and prescribing one system over the other.

**Research and Development in the Field of Artificial Limbs**
**Mauch Laboratories**
**3035 Dryden Road**
**Dayton, Ohio 45439**
**Hans A. Mauch**

### Hydraulic Ankle Control System

The ongoing shakedown tests continue to prove very valuable in bringing out persistent shortcomings of the present ankle design, such as noises, parts working loose, leaks, and structural weaknesses. The most serious finding was that the athletic test amputee (G.S.) in New York, who has already broken two piston rods (his original one in normal use and a stronger heat treated one during skiing), has now twisted a third structurally reinforced one 20 deg out of shape in playing baseball (swinging at bat).

Although the piston rod no longer breaks off but is only deformed, it is obvious that a more drastic structural redesign will be necessary to make the Hydraulic Ankle strong enough for athletic amputees like this one. This will take time. However, the effort seems worthwhile, because once this difficult problem is solved, all other amputees will benefit from the longer life and the increased safety of the resulting device. The wear periods prior to the fractures were: Unit No. 5, one-half yr everyday use including athletics; Unit No. 4, 1½ yr everyday use, and for Unit No. 6, a few days of use—terminated by skiing. Two other (quite active) amputees in Dayton and Arizona have been using their units (No. 1 and No. 2) for over 3 yr each without fractures, and another unit (No. 3) used by several amputees in Dayton and New York has been in use for 1½ yr without fracture.

To understand the problem, one has to remember that the design space for the Hydraulic Ankle is very limited, and that its weight must be as low as possible because it is located at the most distal point of the limb, packing quite a momentum as a result. In addition, the forces acting on the Hydraulic Ankle during the various activities are difficult to assess, considering the range of characteristics of the amputee himself, and the cushioning effects of the foot gear, the foam foot, and the rubber elements at the attachment points of the unit within the leg, as well as the variations in the hardness and friction effects of the walking surface, etc. Considering all these factors and the fact that the fractures occurred only sporadically, it appears that the original computations, which had the goal of obtaining the smallest and lightest possible ankle design, came very close to this ideal.

As mentioned above, the strength of the piston rod has been increased by shape changes and by a different heat treatment, to achieve a theoretical strength increase of 25 percent regarding flexural stress. In addition, a series of tests in cooperation with a local Materials Testing Laboratory (Bowser-Morner) was initiated, to determine at what loads the piston rods break. To understand the test results, one has to know that the force acting on the ball of the prosthetic foot in an upward direction (due to the weight of the amputee and any acceleration force he may apply) is converted by the ankle into a bending moment within the piston rod which is being

counterbalanced by a force acting onto its upper end in a forward direction. Since the lever arms from the ball of the foot to the ankle bolt, and from the ankle bolt to the upper end of the piston rod, are roughly the same, the forward force acting on the upper end of the piston rod approximately equals the upward force acting on the ball of the foot.

The forward loads which had to be applied to the piston rod to produce a fracture were found by the testing laboratory to be 627 lb for the old piston rod which the amputee broke, and 780 lb for the reinforced piston rod. The strength increase was approximately 25 percent as expected. The puzzling fact is that even the lower load of 627 lb is 3½ times the weight of the amputee (180 lb) and that it is highly unlikely that he can produce a load of 3½ times his weight by acceleration (G-) forces.

Since one amputee broke one of his units during skiing, it was established by New York that he used a modern rented ski of the type which can be adjusted to release the ski boot when certain forces lifting the heel upwards and certain twisting forces around the vertical axis are exceeded. It was also established that these adjustments were carried out, when he rented the skis, in accordance with his body weight and level of expertise. From tables studied in a Dayton ski shop it was found that the upward acting heel force adjustment he was most likely given was about equal to his body weight. This means that the maximum ball pressure he could have exerted by leaning forward (before the ski boot would come off) would have to be twice his body weight. Since the ski boot did not come off, the ball pressure must not have reached 360 lb—a load far below the 627 lb needed for breaking the piston rod. So, it appears that the rod did not break as a result of bending stress alone.

A similar investigation regarding a possible fracture due to torsional stress was undertaken. It showed that, considering the results from the testing laboratory (breaking torques of approximately 410 and 460 in-lb for the two piston rods) and the probable setting of the ski boot release force for torsion, torsional stress could just barely have been the reason for the fracture in skiing, but could not explain the fractures in every day use because in that case the foot would rotate on the ground long before torques of that magnitude could develop.

Tests involving superimposed flexural and torsional forces were also considered, but were difficult to design realistically because of the necessary assumptions regarding the ratio between these two kinds of forces as they may occur in actual use of the ankle.

Finally, the possibility of fatigue fracture was investigated. In the skiing case, fatigue had to be ruled out because the fracture happened after only 2 days of use of the restored Unit which contained a new piston rod. The other two cases, involving Units No. 5 and 4, did not

look like fatigue fractures. Furthermore, one has to consider the following facts. Although the aluminum casting material used in our piston rods has a nominal fatigue strength of only approximately one-half of its ultimate tensile strength, these values are obtained by fatigue tests in which a sample is subject to a given stress alternately applied in both directions. In the present application, the stress acts predominantly in one direction which results in a fatigue strength much closer to the ultimate tensile strength of the material.

At this writing, all the existing systems have the reinforced piston rods, which will make fractures in everyday life much less likely. As to the use of the reinforced system for skiing, amputee G.S. will test this in February, 1979. Generally, even if all goes well, the strength of the hydraulic unit will still have to be markedly increased to provide a sufficient safety margin for everyday use and particularly for skiing and similar athletic activities.

Another fairly serious finding was that U-seals of polyurethane rubber take a set, causing internal leaks and a creeping dorsiflexion stop even when installed in hydraulic units with minimal clearance between housing and piston. This called for a tentative return to Viton U-seals, which do not take a set but have serious molding problems and other disadvantages. It seems that a new rubber compound will have to be found which will, it is hoped, combine the best qualities of both Viton and polyurethane.

#### Future Plans

Support for the development phase of this project terminated September 30, 1978. The shakedown testing, however, continues in New York with the goal of achieving an acceptable production item by the end of 1979.

### Design of Prosthetic and Orthotic Devices and Biomechanical Studies of Locomotion

**Biomechanics Laboratory**
**University of California, Berkeley**
**5144 Etcheverry Hall**
**Berkeley, California 94720**
**Charles W. Radcliffe, Donald M. Cunningham, James M. Morris, M.D., and Larry Lamoreux, Ph. D.**

#### Design of Lower-Limb Prosthetic and Orthotic Devices

*Four-Bar-Linkage Polycentric Pneumatic Knee*

Fifty units are scheduled for delivery in January 1979. These will be used for evaluation fittings at San Francisco VA Medical Center and other qualified institutions.

*Six-Bar-Linkage Knee with Friction Swing-Control*

The prototype unit has been worn continuously by a 110 kg (240 lb) amputee since September 1978. The unit has proved to be structurally sound. The polycentric action provides enhanced voluntary control of stability that is somewhat less pronounced than that of the 4-bar knee. The friction swing control has not maintained its settings well and will require further development.

*Friction-Stabilized Knee*

This previously reported knee (BPR 10-30, page 193) is designed to engage a knee brake at heel contact but to release the brake prior to toe-off in order to allow smooth entry into swing phase (Fig. 19). The same brake also serves as an adjustable friction swing-phase control. Special instrumentation has been developed to obtain measurements of brake friction as a function of applied braking force and knee angular velocity. This information is being used to develop a computer model of the knee. The model will permit optimization of swing control characteristics without the actual construction of a series of prototypes. Tests indicate that braking action increases with increasing angular velocity, an unexpected result that suggests the possibility of an excellent swing control effect.

*SACH Foot with Metal Keel*

Patterns have been prepared for two prototype cast aluminum keels. The first had a channel-section structure that turned out to be undesirably heavy (140 g). The second made use of an I-beam structure that was significantly lighter (110 g). Feet were molded with both keels, achieving total weights with integral pylon couplings of less than 600 g. Comparative destructive strength tests of the two keel designs are in preparation. Amputee assessment of function of the prototype units continues to be favorable.

*Multi-Input Control of Knee Stability*

A preliminary laboratory investigation of multi-input control of knee stability has been concluded. The experimental knee prosthesis consists of a single-axis knee mechanism with a U.S. Manufacturing Company Dyna-Plex hydraulic swing-phase control unit. The hydraulic damper was modified to allow servomotor control of the valve position. Figures 20 and 21 show the experimental knee prosthesis.

The servo valve was controlled by the Biomechanics Laboratory NOVA minicomputer, using special programs that responded to data from feedback transducers located on the knee prosthesis. Signal transfers were achieved by means of an electrical cable connecting the prosthesis to the minicomputer, so the present prototype is strictly for laboratory use.

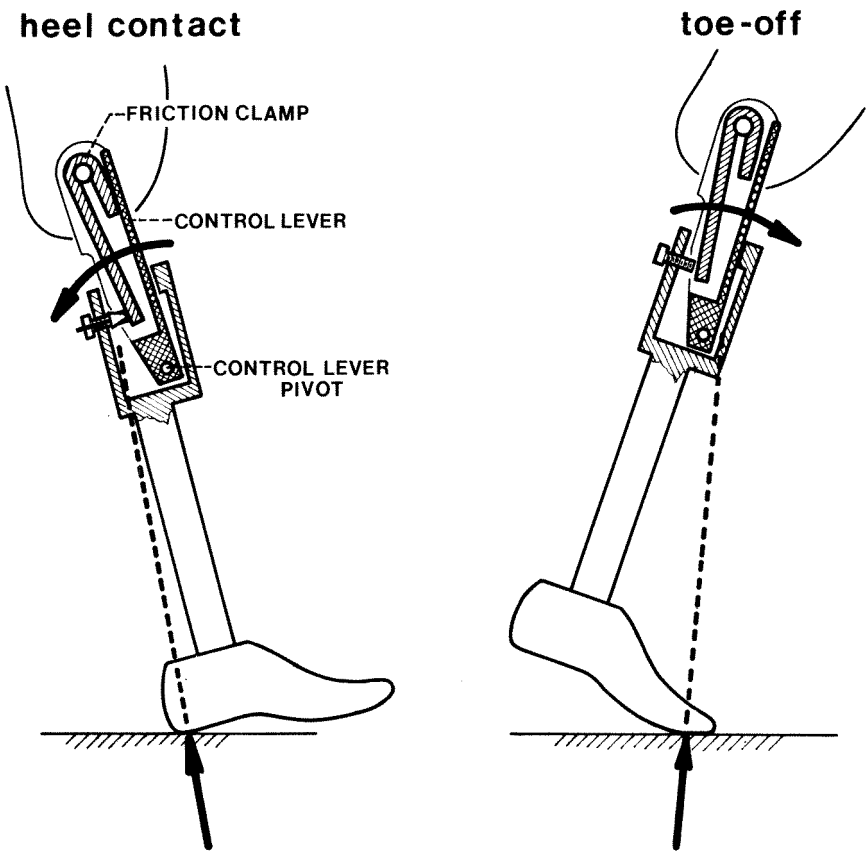


FIGURE 19.—Schematic representation of the UC-BL Friction Stabilized Knee, showing the mechanism by which the knee brake is applied at heel contact and released when load is transferred to the forefoot.

One significant change in the hardware was made since the last report. The knee angular-velocity transducer was eliminated and replaced by an analog differentiator which operates on the knee angular position. A reduction in size and number of components resulted. The slight time delay that resulted from this change (Fig. 22) had no objectionable effect on performance.

In order to test the actual performance of the knee prosthesis control system, a series of experimental runs was conducted. The designer himself was the subject for all the experiments, using a bent-knee socket. A total of nine runs was conducted for the normal walking mode. The experimental conditions were varied to include a slow speed (0.6 m/sec), a medium speed (0.8 m/sec), and a fast speed (1.0 m/sec). Three levels of swing-phase control were used for each walking speed.

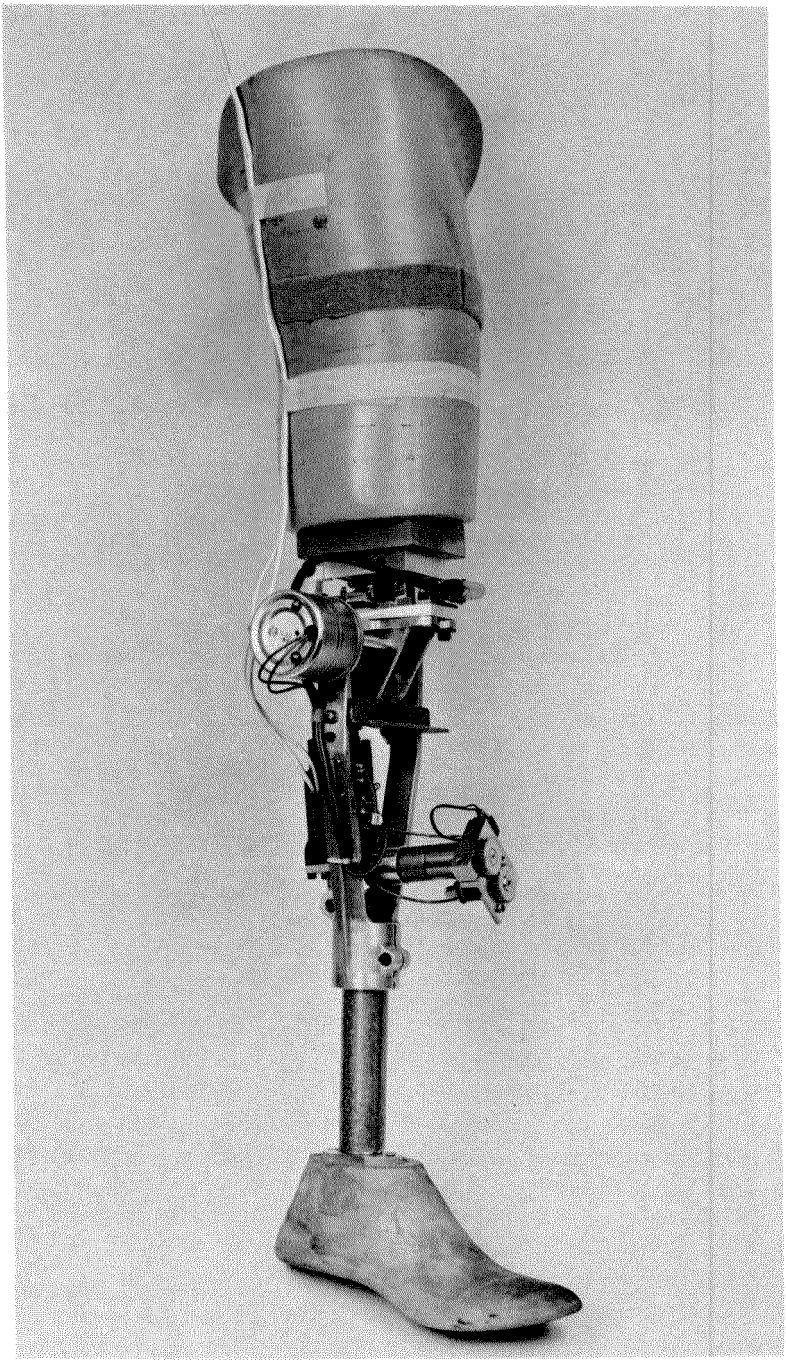

FIGURE 20. — Multi-input computer-controlled experimental knee prosthesis.

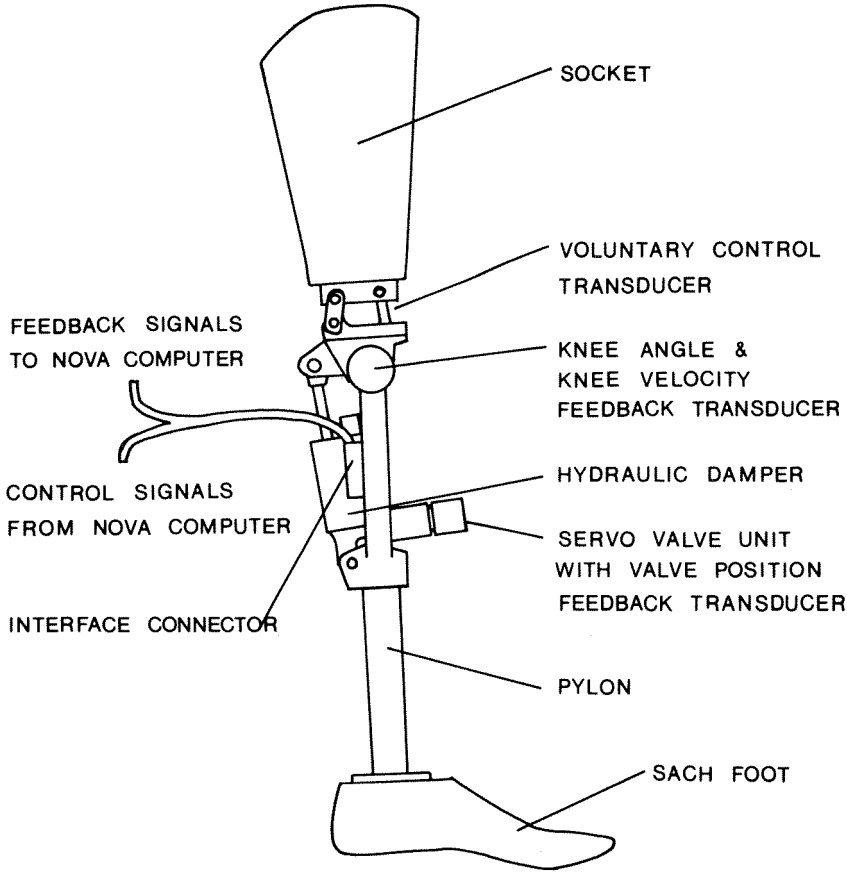


FIGURE 21. — Diagram showing various components of the multi-input computer-controlled experimental knee prosthesis.

The performance of the knee prosthesis control system during normal walking was very satisfactory. Damping during swing phase was effective and predictable (Fig. 23). The change from swing phase to stance phase is detected in the computer by noting the cessation of extension angular velocity. The change from stance phase to swing phase is initiated by a hip flexion moment greater than a preset value. Both of these cycle control methods were very satisfactory.

Several tests were made of the ability of the test subject to initiate controlled flexion during stair descent. Three methods of control were tried and determined to be possible candidates for the final selection. These are:

1. The subject generates a voluntary control signal (hip flexion or extension moment) to open or close the valve. The amount of valve opening is proportional to the magnitude of the voluntary control

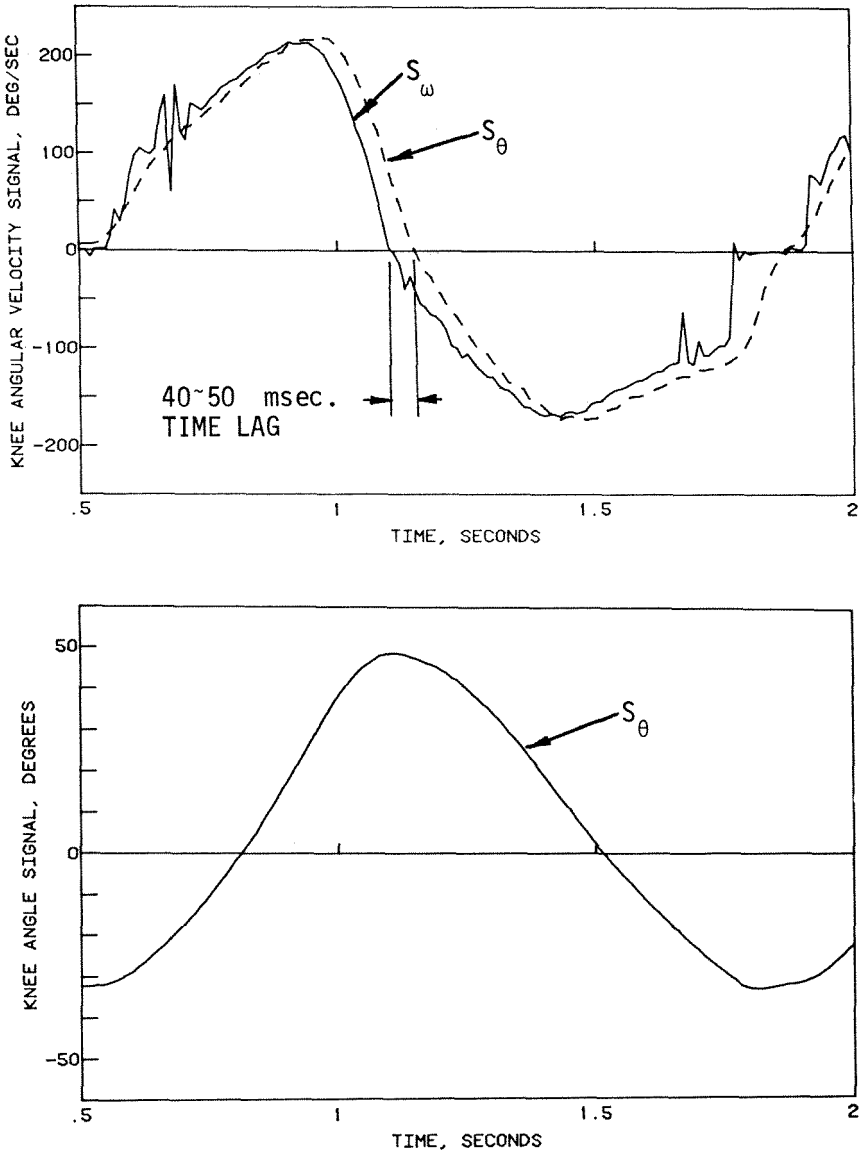


FIGURE 22.—Comparison of signal obtained from the knee angular-velocity transducer ($S_\omega$) versus signal obtained from analog differentiator $S_\theta$. Time lag of 40 to 50 ms results. The knee angle signal ($S_\theta$) is presented as reference.

signal. The resulting effect is moderate controllability, because the rate of flexion is also dependent upon load and knee position. However, the control system is very safe and dynamically stable.

2. The knee yielding rate is controlled so that the controller compensates for load or geometry variations. A preset angular velocity

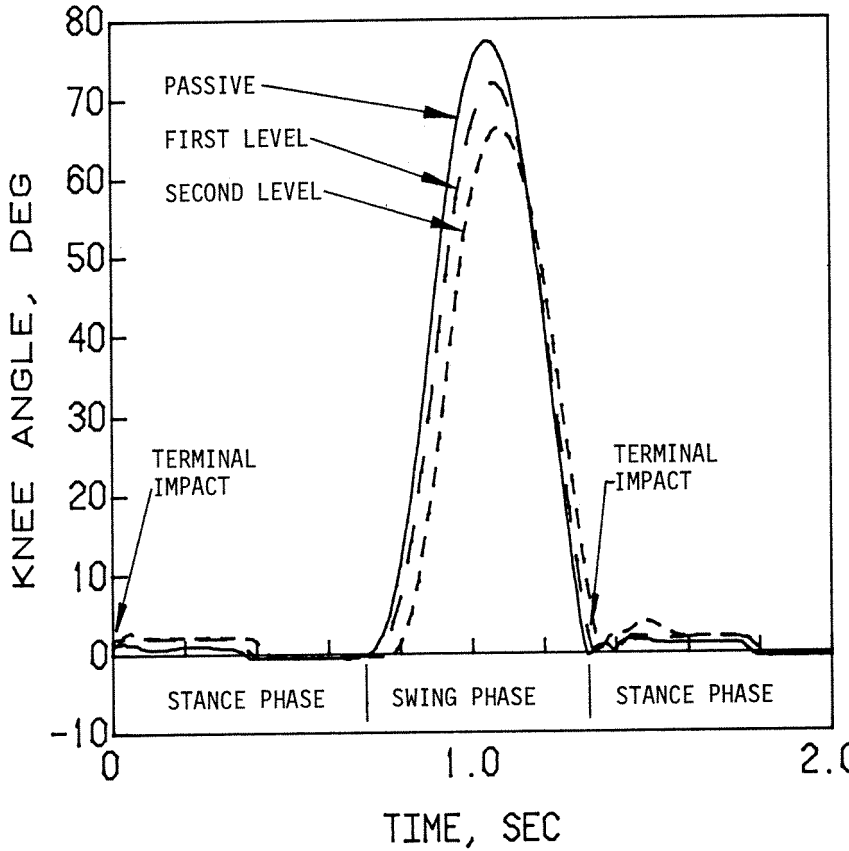


FIGURE 23.—Effect of swing-phase control on knee angle during swing phase. Maximum knee-flexion angle in swing phase is largest when small passive resistance to swing phase is applied (fixed swing-phase control setting). Maximum knee-flexion angle is reduced when swing-phase resistance is actively controlled (first level). Maximum knee-flexion angle is further reduced when higher active swing-phase control resistance is applied (second level).

was selected so that the knee always yielded at the same rate while descending stairs. This method is least controllable by the subject, but if a good preset value is selected it is effective. However, the designer feels that more control by the amputee would be desirable.

3. The knee yielding rate was actively controlled to be proportional to the magnitude of the voluntary control signal generated by the subject. This method produced the best results (Fig. 24). The control algorithm is much more complicated than the first two methods, and there is a possibility for dynamic instability to develop: efforts to refine the control system to prevent dynamic instability are continuing.

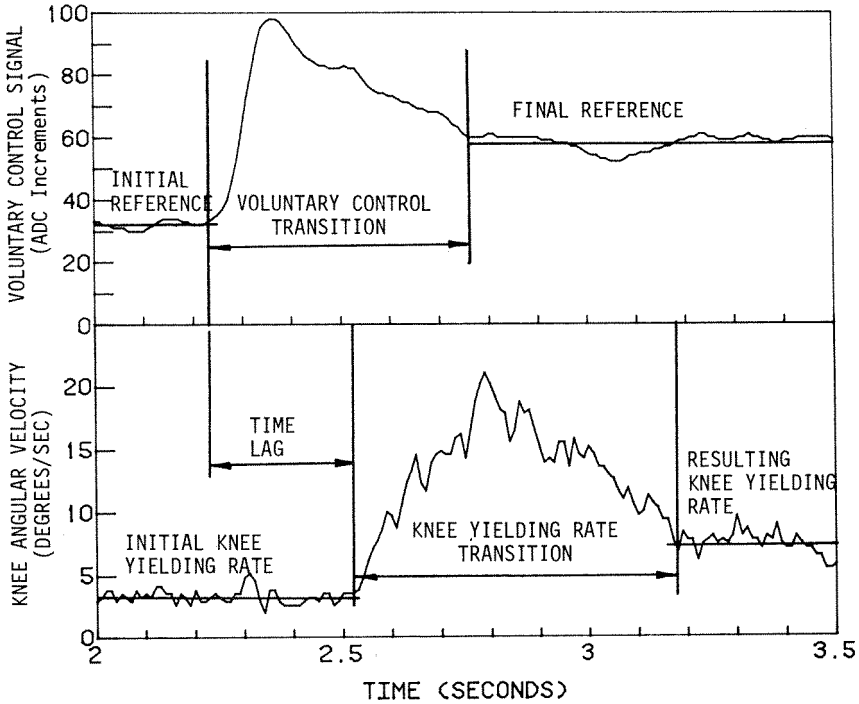


FIGURE 24.—Knee angular velocity and voluntary control signal during stair descent. Knee yielding rate (knee angular velocity) is actively controlled to be proportional to the magnitude of the voluntary control signal generated by the subject. In the figure, the subject changes the knee yielding rate by changing the voluntary control signal from initial reference to final reference.

A second stage of research into multi-input control of knee stability is currently underway. The objective of this stage is to further refine the computer control of knee stability, and to produce a compact and portable experimental unit so that the scope of testing can be expanded.

*Clinical Evaluation of Lower-Limb Prosthetic Devices*

In October 1978, a cooperative project was initiated between the UC-Biomechanics Laboratory and the San Francisco VA Medical Center (Fort Miley) for the purpose of expediting clinical tests of new prosthetic devices and components on VA patients.

An evaluation laboratory is being developed at Fort Miley where selected gait-assessment procedures developed in Berkeley will be used for routine clinical gait evaluation of amputees and other patients with locomotor disabilities. An orthopedic surgeon has joined the staff at Fort Miley, specifically to direct the project. Engineers from Berkeley have been actively involved in planning, and have been

attending orthopedic rounds on a regular basis in order to become familiar with clinical problems encountered at Ft. Miley.

Plans for space, equipment, and staff are progressing rapidly. Space renovations for the new facility are projected for completion before the end of FY 1979.

### Mobility Aids for the Severely Disabled

*PC2 Adjustable Height Wheelchair (formerly PRAHN II)*

The first prototype of the PC2 wheelchair was essentially complete in September 1978, but delays in fabrication of brake parts have moved the expected commencement of daily-living testing to January 1979.

*Spring Suspension Powering Unit (SSPU) Wheelchair*

The second SSPU wheelchair is complete. It is being tested routinely in Berkeley.

*Spring Suspension Wheelchair*

Design work has begun on a wheelchair incorporating the high performance and spring suspension features of the PC2 and SSPU wheelchairs, but with a simple frame designed for ruggedness and low cost. A prototype is expected by August 1979.

*Spring Suspension Forks*

Two pairs of spring suspension forks have been fabricated, one with vertical telescoping action, and another with a swing arm pivoted above and in front of the wheel. Initial tests indicate that the swing arm design provides a better ride because it is better suited to absorbing horizontal impacts. A refined version of the swing arm design is scheduled for completion by August 1979.

*Lever Drive System*

Design work has begun on a lever drive system for manual wheelchairs with a feasibility prototype expected by August 1979.

*Manual Chair Spring Suspension*

A manual wheelchair spring suspension has been designed which will minimize drive energy absorption by the suspension system. A feasibility prototype is expected by March 1979.

## Ultralight Below-Knee Prosthesis

**Rehabilitation Engineering Center, Moss Rehabilitation Hospital**
**12th Street and Tabor Road, Philadelphia, Pennsylvania 19141**
**A. Bennett Wilson, Jr. and Charles M. Pritham, C.P.**

More than 36 BK amputees have been provided with ultralight prostheses by the six participating private prosthetics facilities. Most of the prescriptions were provided by the VA Regional Office Amputee Clinic, Philadelphia, Pa. Some new patients have also been included.

The evaluation is done by personally administered questionnaires which concern the opinions of the patients and the prosthetists regarding the new design. Initial results indicate that the prosthesis-experienced amputees unanimously prefer the lighter weight of the polypropylene prosthesis. The major patient complaints have concerned the cosmesis of the prosthesis and the rigidity of the foot. Prosthetists feel that weight reduction is beneficial. Structural failure at the foot (with very heavy patients), mainly at the welded seams, have occurred; it is conceded that this has been due to poor technique. Another complaint is that the finished polypropylene prosthesis cannot be modified as easily as a conventional one.

Experience to date indicates that the ultralight BK prosthesis has a definite role in management of BK amputees, and research is continuing at the REC in an effort to alleviate the problems encountered with the present design.

The British Ministry of Health intends to conduct a large scale evaluation of the ultralight BK prosthesis in the very near future, because of extremely favorable results obtained in a pilot study.

An interim report will be issued by this REC shortly after January 1, 1979 and a final report will be made about June 30, 1979, so as to include relatively long-term results on all of the subjects used in the study. In addition, a revised manual will be made available.

## Immediate Postoperative Prostheses Research Study

**Prosthetics Research Study**
**Eklind Hall, Room 409, 1102 Columbia Street**
**Seattle, Washington 98104**
**Ernest M. Burgess, M.D.**

During the calendar year 1978, a number of continuing research activities were terminated by data accrual and scientific publication. At year end, ongoing PRS research is as follows:

### The Vascular and Nutritional Status of the Ischemic Limb

Upon completion and publication of the $Xenon_{133}$ study (Holloway,

G., and E. Burgess,: Cutaneous Blood Flow and Its Relation to Healing of Below Knee Amputation. Surgery, Gynecology and Obstetrics, 146, 750-56, May 1978) this investigation has been extended to include additional promising laboratory screening techniques. Following the accepted routine medical and vascular workup, the patient is referred for cutaneous blood flow studies to include: a. segmental Doppler, b. Laser Doppler, c. $Xenon_{133}$, and d. transcutaneous $pO_2$ saturation. These four laboratory observations are made at a number of sites in the threatened limb. Of particular interest is the development of the Laser Doppler, a non-invasive determinant with potentially high correlation to clinical wound healing. Associated with the PRS staff in this study are Drs. Allen Holloway, F.A. Matsen, III, and Brian Thiel, and a fulltime technician, Charles Simmons. The latter is employed by PRS.

During 1979 it is our plan to process, preoperatively, a minimum of 100 patients scheduled for amputation or vascular reconstruction. Collected data will be related to normal controls.

Clinical wound healing following amputation should define, with greater accuracy, the lowest appropriate level at which amputation can be successfully performed with primary wound healing. We believe this to be the most comprehensive investigation of this type being carried out in this country. An extension of these studies will include data accrual under a variety of physical modifications including varying degrees of external pressure application, local changes in skin temperature, and limb position relative to the trunk.

### Functional Capabilities of Residual Below-Knee Limbs

A computerized liquid-displacement-volume and contour study is underway, with five subjects at present under study. The protocol includes biweekly measurements on the five subjects. In addition to the volume/contour measurements, the EMG activity of residual limb muscles, the prosthetic retention capability, and an analysis of gait are performed on each subject. This work is an extension of our previously reported studies into physiological suspension and the use of photogrammetry and CAT scanning to improve prosthetic socket design.

Each of the five subjects now under study carries out a closely monitored residual limb muscle rehabilitation program, directed by B. Kegel, Research Physical Therapist. Included are residual limb resistive exercises using an air compression source and also biofeedback techniques. The protocol runs for a period of 3 months with each amputee. Surgical techniques, rehabilitation methods, and prosthetic design can be related to the research findings.

### Recreational Activities and "Quality of Life"

The studies conducted with Miller, Hutton, Enoka, Burgess and Frankel at the Department of Physical Education, University of Washington, have now appeared in three individual monographs. These relate to the biomechanics of amputee running. The studies are now being extended to other forms of physical activity and skills relevant to recreational pursuits. There is intense lay interest in this work. One of our amputees, a unilateral below-knee individual, climbed two high Western glacier mountain peaks this past summer, including Mt. Rainier (14,500 ft). He carried a 70-lb pack on his back, with equipment including a pair of short skis. His custom BK prosthesis was made according to bioengineering principles derived from previous PRS research. These studies have been extended to include a wide spectrum of sports and recreational activities for amputees.

### Clinical Amputee Service, Seattle VA Medical Center

PRS continues to supervise and direct the Amputee Center and Amputation Service in Seattle, both inpatient and outpatient. The inpatient service averages ten major amputations per month at this time. Weekly outpatient clinics handle 15 to 25 patients each session. The service is actively engaged in teaching both locally and nationally. It also forms the clinical base for PRS investigation.

## Below-Knee Amputation with Immediate Postoperative Fitting of Prosthesis

**Tucson VA Medical Center**
**Tucson, Arizona 85723**
**Wesley S. Moore, M.D.**

During the past 6 months we have made plans to construct and equip a Prosthetics Research Laboratory. We've also recruited a full-time Research Prosthetist for the project. The contract for remodeling of the laboratory space was let, and the remodeling program is in full activity. We contemplate a completion date of February 1, 1979 for the laboratory. Equipping the laboratory will occur shortly thereafter.

With availability of a full-time prosthetist, institutional approval by the Human Studies Committee has been obtained for resuming the randomized study of Immediate Postoperative Prosthesis vs. the Controlled Environment Treatment Unit for the initial management of the lower-limb amputee following surgery.

Finally, plans are well along for the development of the pilot program to establish a Regional Referral Center for Amputation.

## Hemodynamic Evaluation of Postoperative and Preoperative Amputees

**Castle Point VA Medical Center**
**Castle Point, New York 12511**
**Bok Y. Lee, M.D., Frieda S. Trainor Ph. D., David Kavner, D. Eng., and John L. Madden, M.D.**

In the previous progress report (BPR 10-30, Fall 1978) on the use of noninvasive techniques as an aid in the selection of amputation level, use of the technique of photoplethysmography was shown to play an important role. Continued experience with the use of the photoplethysmograph has led us to the evaluation of its use in determining healing potentials of ischemic ulcerations and decubitus ulcerations. Initial work has been completed and forms the subject of this report.

In a series of 50 patients, the photoplethysmograph was used to evaluate the cutaneous circulation around the ulcer site during the course of a conservative management program. Four readings were taken at 1-cm intervals from the edge of the ulcer in each of four directions: four readings anterior, four readings posterior, four readings superior, and four readings inferior.

During the conservative management program, those patients who exhibited clinical evidence of healing were noted to also exhibit excellent pulsatile cutaneous blood flow, indicative of good tissue perfusion, as evidenced by the pulsatile waveforms obtained through the use of the photoplethysmograph.

Patients whose ulcers were not noted to exhibit clinical evidence of healing showed an absence of pulsatile cutaneous blood flow, indicative of poor tissue perfusion, as shown by a lack of pulsatile waveforms using the photoplethysmograph.

In patients evaluated at the start of the conservative management program, a prediction as to whether the ulcer would heal or not could be made on the basis of the photoplethysmographic tracings. Patients whose ulcers exhibited good pulsatile waveforms at the beginning of the conservative management program were predicted to have a good healing potential, and these ulcers were found to heal spontaneously. In contrast, ulcers exhibiting poor pulsatile waveforms at the start of the conservative management program were predicted to have poor healing potentials—and were found to be not healing after a prolonged conservative management program. They required surgical intervention to facilitate healing.

It appears that photoplethysmographic evaluation of cutaneous blood flow to an ulcer site provides a reliable indication as to the ulcer's healing potential. This effectively eliminates prolonged wait-

ing periods necessary before clinical signs of healing or nonhealing become evident. Ulcers with good pulsatile cutaneous blood flow have good healing potential and conservative management should be continued. Ulcers with poor pulsatile cutaneous blood flow have poor healing potential and would require prompt surgical intervention to facilitate healing.

**Engineering Applications in Orthotic and Prosthetic Treatment of Musculoskeletal Defects**

**Motion Study Laboratory**
**Rehabilitation Medicine Service**
**Cleveland VA Medical Center**
**10701 East Boulevard**
**Wade Park, Cleveland, Ohio 44106**
**E. Byron Marsolais, M.D., Ph. D.**

Dr. Herman J. Woltring joined the laboratory in September 1978 through the Case Western Reserve University Department of Orthopaedics, and has accelerated our efforts to make the Selspot system functional in gait analysis. He has reviewed our entire laboratory data acquisition system, and has taken our Selspot equipment back to Sweden for adjustment. He has also implemented much of his previously developed orientation software into our computer system. At this point in the development, we feel confident that we will be able to reach a reasonable level of accuracy in 3-dimensional gait analysis with the Selspot system.

The clinical laboratory is continuing to function well. We have managed to implement a computer-generated clinical report which is currently being evaluated in our Medical Center. Initial evaluation indicates that the clinicians are able to utilize the report and find it valuable in making clinical decisions and evaluating the effects of various types of therapy.

The clinical laboratory data on the total joint is currently being reviewed. Additional wire electrode implants have been made in the gluteus maximus and quadriceps in two patients with flexion contractures, with some reduction of the contractures in both patients through electrical exercise.

The microprocessor stimulator construction is continuing (on contract with Case Western Reserve University) and we are looking forward to using it to augment hemiplegic gait.

**Patient Evaluation of a Functional Electrical Stimulation Hand Orthosis**

**Cleveland VA Medical Center**

**10701 East Boulevard**
**Wade Park, Cleveland, Ohio 44106**
**P. Hunter Peckham, Ph. D.**

### Introduction

The purpose of this project is to develop and evaluate the effectiveness of upper-limb orthotic systems actuated by electrically stimulated paralyzed muscle. The focus of the present research is on a system designed to provide controlled grasp and release of the hand, through electrical stimulation of paralyzed forearm finger flexor and extensor muscles. The system has been described in detail in previous reports (BPR 10-28, 10-29, 10-30).

### Hardware Development

The complete system that has been developed is shown in Figure 25. Position of either the shoulder (shown) or head supplies the proportional command which governs the strength of contraction by varying the stimulus pulse width and frequency delivered to the muscle. On/off and hold commands are controlled by a myoelectric signal. A wrist-hand orthosis is used to stabilize wrist, thumb, and interphalangeal joints of the fingers.

Fabrication of three stimulators has been completed (Fig. 26) and two have been fitted to subjects for outpatient evaluation (see below). One system incorporates the shoulder position controller (Fig. 25), redesigned by the Case Western Reserve University Rehabilitation Engineering Center. The transducer, which senses movement in the sensing rod as a change in magnetic coupling, required minor alterations in the input electronics of the stimulator. The second system utilizes head position for the proportional command source. In this period, this transducer has been redesigned to fit inside a conventional behind-the-ear hearing aid chassis (Fig. 27). The audio transducer from the hearing aid is retained and used to supply audio feedback signals to the subject. The position transducer fits in the remaining space behind the audio transducer. The transducer functions as a damped pendulum. Movement from the gravity vector during flexion and extension of the neck is sensed by strain elements which are mounted on a thin shim with a pendulous lead mass at the end. The pendulum is then damped by immersion in silicone fluid. The transducer, housed in the hearing aid body, is simply mounted and appears to be mechanically stable and cosmetically appealing.

### Patient Studies

Three subjects are active at present in the development and evaluation of this system. All patients are young males (ages 21 to 27 yr) who sustained spinal cord injury and have motor function at the C-5 level.

FIGURE 25.—Stimulation system showing shoulder position controller and audio feedback transducer (on chest), reference electrode (around humerus), surface connector and lead wire to finger extensor electrodes and orthosis. The stimulator is behind the subject's left hand. The connector for the MES site is over the left biceps and is not shown. During use, clothing covers the majority of this system.

Each has voluntary strength and sensation which is greater in one arm than the other. In the stronger arm, each has shoulder flexion, shoul-

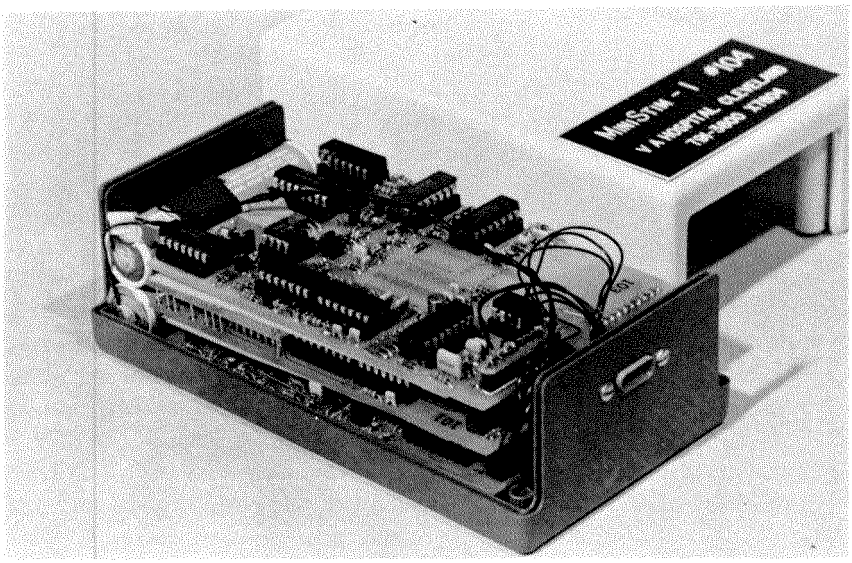

FIGURE 26.—Stimulator package. The device is battery powered with overall dimensions of 6 in × 3 in × 2 in.

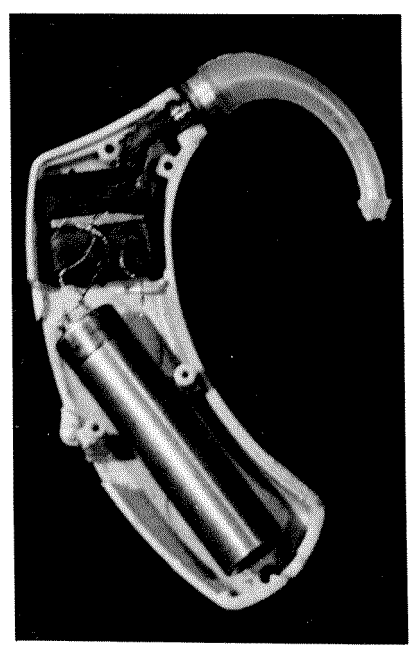

FIGURE 27.—Head position transducer. At left, strain gage mounted on shim material with pendulous lead mass; fluid fills the capsule and provides damping of the pendulum. At right, the mounting in a conventional behind-the-ear hearing-aid chassis (the aid's audio transducer is retained to supply audio feedback cues).

der abduction, and elbow flexion which are graded good, but no motor function distal to the elbow. One subject additionally has fair flexion and extension of his index finger. The opposite arm of each has weak or absent activity of these same muscles. In each case, the orthosis is fitted to the patient's strong arm.

Stimulation is delivered to the muscle through percutaneous helically coiled wire electrodes. In the past period, we began to use stimulating electrodes wound from ten-strand type 316 stainless steel Teflon-insulated wire (i.e., MSW electrodes), developed in the Applied Neural Control Laboratory at Case Western Reserve University instead of the single-strand wire electrodes (SSW) previously reported. The MSW electrodes are expected to have a longer life expectancy than the SSW. The results of the studies with the three subjects is reported below. Two subjects are from the study supported by the Veterans Administration and the third is from a similar study being performed in parallel in the C.W.R.U. Rehabilitation Engineering Center and supported by the Rehabilitation Services Administration.

Patient M.V.R. was injured in April 1975 in a motorcycle accident. He was fitted with the first stimulation system in July 1978, after having worked with a prototype system for 24 months. He uses the head position transducer for proportional control, and chronically indwelling percutaneous electrodes in his contralateral biceps for the myoelectric source. A metal splint is used to stabilize the wrist and hand. This subject was using his system regularly for 1 month while attending college, but 3 months ago he dropped out of college and usage has been limited to situations in the home when his independence was important to him.

Subject J.H.L. was injured in May, 1973, in a diving accident. He uses the shoulder position transducer for proportional control, and also uses percutaneous recording electrodes in his contralateral biceps for the myoelectric signal acquisition. He received the second system in September 1978, and also has used it periodically since that time, primarily in instances necessitating independence. He has been out of college for one semester, but is returning again in January 1979. At that time he anticipates daily usage, as was our previous experience in his use of a prototype system during similar circumstances.

Subject T.V.D. was injured in December, 1974, due to a gunshot wound. He has weak index finger flexion and extension, but is otherwise completely paralyzed distal to the elbow. He is presently undergoing evaluation to determine the most appropriate type of control. Based on our evaluations to date, neither the head or shoulder control may be appropriate. This is because he is able to grasp quite rapidly and accurately many lightweight objects, without applying stimulation, when his hand is in a wrist-driven prehension orthosis to guide his finger movement. Therefore his control needs appear

primarily the ability to augment his weak grasp, for which rapid change in the command may not be imperative. This control situation is similar to that reported below in a system under development for C-6 quadriplegic patients; T.V.D. is being evaluated with this same type of control.

### Results

Initial feasibility studies, performed in conjunction with the Applied Neural Control Laboratory at C.W.R.U., have been completed. These studies have demonstrated that functional lateral pinch was provided over a full range of wrist positions by electrical stimulation of the appropriate muscles, that thumb extension was useful, especially in grasping large or lightweight objects, and that the control required only a relatively slow change from flexion to extension but that proportional control was still necessary. No external orthosis was needed to guide proper motion of the hand. Sufficient control was provided by a myoelectric signal (MES) in which the processed (rectified and averaged) signal controlled the stimulator output proportionally in time. That is, two levels of the MES were sensed; exceeding the lower level resulted in an increase or decrease in the command in proportion to the duration of time that the level was held; exceeding the upper level changed the direction of the change in command (i.e. from increasing to decreasing, or vice versa); signals below the lower level did not change the command.

This means of control is presently being implemented in the miniature stimulators, and will be evaluated as the command control source for subject T.V.D., as well as three C-6 patients who are presently associated with this program.

### Lateral Pinch and Release in the C-6 Quadriplegic

The purpose of this project is to develop a system to augment tenodesis grasp in the C-6 quadriplegic patient by electrical stimulation of the finger flexor, thumb abductor, and opponens pollicis to provide lateral pinch, and the extensor pollicis to provide release. The rationale for this approach is as follows: These subjects are able to manipulate various objects (especially eating and writing utensils), but are unable to hold them securely after they have positioned them properly. Thus, the patient must rely on special adaptive aids and splints which frequently are rejected after long-term followup. Through electrical stimulation of their paralyzed muscles, these tonic functions can be accomplished, and their need for an external orthosis in these tasks may be eliminated.

## Research and Development Project on Advanced Orthotic Devices for Adult Paraplegics

**Prast Research Associates, Inc.**
**1094 Stony Point Road**
**Grand Island, New York 14072**
**Martin T. Prast**

**Department of Engineering Design and Economic Evaluation**
**Engineering Center OT 6-34, University of Colorado**
**Boulder, Colorado 80302**
**Lawrence E. Carlson, Ph.D.**

As reported in BPR 10-30, Fall 1978, certain design weaknesses in the self-locking knee locks (capstan knee locks) were discovered in PACO III. Redesign of that portion of the PACO system is presently in progress. When this has been accomplished PACO III will be further evaluated.

## Studies of Normal and Abnormal Motion

**Kinesiology Research Laboratory**
**Wood VA Medical Center, Wood, Wisconsin 33193**
**Mary Patricia Murray, Ph.D.**

No report was submitted for this period. A full report will appear in the next issue.

## Electrophysiological Techniques in Evaluation and Correction of Neuromuscular Defects

**Nashville VA Medical Center**
**1310 24th Avenue South, Nashville, Tennessee 37203**
**Paul P. Griffin, M.D., Richard Shiavi, Ph.D., Sherry Champion, R.P.T., and Frank Freeman, M.D.**

No report has been submitted for this period.

## Functional Neuromuscular Stimulation of Limbs: A Feasibility Study

**Brentwood VA Medical Center**
**Wilshire and Sawtelle Blvds.**
**Los Angeles, California 90073**
**John A. Foster, M.D. and Moshe Solomonow, Ph.D.**

No report has been submitted for this period.

**Evaluation of Electrical Techniques for Stimulation of Hard Tissue Growth**

**Syracuse VA Medical Center**
**Irving Avenue and University Place**
**Syracuse, New York 13210**
**Robert O. Becker, M.D., J.A. Spadaro, Ph.D., and A.A. Marino, Ph.D.**

The Orthopedic Laboratory has continued to expand its evaluation of the clinical efficacy of electrically injected silver ions as a local bactericidal agent.

Since July 1978, eight new cases have been added to the series, for a total of 22 since the clinical phase of the program began. A full report on the first 16 cases was recently published (Journal of Bone and Joint Surgery, 60-A, 871-881, 1978) and this treatment was the subject of nationwide television news stories on two networks.

Dr. Becker and his group have found that, in the majority of cases, seven to ten days of treatment are sufficient to produce a bacteriologically sterile wound in cases of osteomyelitis of less than seven years duration. Longer term cases, with marked osteosclerosis extending over large areas of the involved bone, may be controlled and become surgically clean wounds, but cannot be rendered sterile with present techniques.

A new extension of the technique has been under study for the past two months. In those cases in which a sterile wound can be attained, open bone grafting has been done following two successive sterile cultures. The bone graft is protected by a layer of silver nylon material applied directly over it in the operating room. This material is also made electrically active and serves as a barrier to contamination of the graft site.

A recent observation has indicated that the silver anode also has a major regeneration stimulating effect upon bone marrow elements. This observation will be followed up in detail in 1979.

Expanded clinical testing of the electrically injected silver in osteomyelitis and other local recalcitrant infections is being planned to begin in May 1979 at a number of clinical centers outside of Syracuse.

Other aspects of bioelectrical treatment and basic research into bioelectronics continue at the Syracuse laboratory.

**Acceleration of Bone Healing by Electrical Stimulation**

**Helen Hayes Hospital Biomechanics Research Unit**
**Route 9-W, West Haverstraw, New York 10933**
**George Van B. Cochran, M.D.**

No report has been submitted for this period.

**Orthopedic Implant Device Retrieval and Analysis**

**New Orleans VA Medical Center**
**New Orleans, Louisiana 70146**
**Allan M. Weinstein, Ph.D.**

In the last 6-month period (June to December 1978), 129 additional orthopaedic implants have been retrieved. Of these implants, 70 are bone plates, 34 are hip nail devices, and 25 are hip prostheses. For each device, specific information has been noted such as patient name, hospital, manufacturer, implant site, duration of service, and condition as received. In addition, a metallurgical examination has been initiated for each device. Macroscopic examination yielded information regarding type and location of mechanical damage. Wear and burnishing marks as well as gouges produced by the surgical procedure were carefully noted.

The type and degree of corrosion was determined by macroscopic and microscopic examination. The severity of the corrosion was indexed on a scale of 0–5, with 0 representing no visible corrosion and 5 representing very severe corrosion. Results show that all of the 97 stainless steel screw and plate implants exhibited corrosion. Crevice and pitting were the most common types of corrosion found. Only one of the seven Co-Cr-Mo screw plate implants had undergone corrosion.

In the case of mechanically fractured implants, the failure mode was determined where possible and recorded.

Rockwell hardness measurements were made for each implant. The hardness values ranged from $R_B61.1$ to $R_C37.9$.

Clinical data such as operative reports and histological and radiographical findings are being collected from the appropriate hospitals. Finally, tests to determine the bend and fatigue strengths of the implants are now underway.

**In Vitro and In Vivo Quantitative Analysis of Acetabular Failure in Total Hip Arthroplasty**

**Gainesville VA Medical Center**
**Gainesville, Florida 32602**
**William Petty, M.D.**

Total hip arthroplasty is a development with marked impact on the treatment of hip disease. One complication of the procedure has been loss of bony support and displacement of the arthroplasty acetabular component. Causes of this complication include previous acetabular fracture, protrusio acetabulum, and over-reaming of the acetabulum at the time of arthroplasty. Protrusio acetabulum due to any cause may be responsible for inadequate bony support of the acetabular component. Treatment of displaced acetabular components or protrusio acetabulum has included attempts at achieving stability of the prosthetic acetabulum by increasing the amount of bone cement and/or reinforcing the cement with metalllic mesh or other reinforcing devices. Establishing bony support with bone graft has also been suggested.

The objectives of the research are to determine the effect of reaming of the bony acetabulum on the strength of the pelvis-and-prosthetic acetabulum complex, and to determine the efficacy of various reinforcing devices to establish solid support of the prosthetic acetabulum.

Paired human cadaveric hemipelves are instrumented with strain gages, which sense microscopic deformation in the bone. The pelves are loaded through femoral head prostheses to simulate the stance phase of gait, and the strain pattern in the vicinity of the acetabulum is recorded. Acetabular prostheses are then implanted and the bones loaded again as before, and the new strain pattern determined. The objective is to determine the changes in the strain (and consequently, the stress) patterns due to the presence of the prostheses, and to measure the effect of the depth of reaming on the strain pattern. Subsequent experiments will evaluate various techniques for reinforcing the weakened acetabulum.

Unfortunately, there has been considerable technical difficulty in the installation and balancing of the strain gages. Over the past 3 to 4 months, this problem has been, to a great extent, solved. The data reduction — that is, converting the raw data into useful information — is taking considerably more time than anticipated. Because of this, at the present time, the project is running at a rather slow pace. It is hoped that we will be able to obtain the use of an Autodata strain gage data logger to help in this very time consuming task.

It has been determined that there are marked changes in the strain

patterns of the bony pelvis following implantation of a total hip arthroplasty acetabular component. We have been unable to complete the experiments evaluating the effect of reaming depth, but we hope this will be completed in the near future. Then we may proceed with analysis of the various methods for reinforcing the bony pelvis-acetabular prosthetic component complex.

## In Vivo Loading of Knee Joint Replacements

**Orthopaedic Engineering Laboratory**
**Glennan Engineering Building**
**Case Western Reserve University**
**2040 Adelbert Road**
**Cleveland, Ohio 44106**
**Richard H. Brown, Ph. D., Kingsbury G. Heiple, M.D., and Victor M. Goldberg, M.D.**

### Background

Since our previous report, Fall 1978, in which the basic design of the telemeterized total knee joint tibial component was described, prototype bench testing of the unit has been undertaken. The results of this prototype testing were used to further refine the load cell to be incorporated in the tibial component, in order to optimize the load cell's measurement sensitivity in all desired modes while, at the same time, minimizing the load cell's overall deflection. The new load cell configuration resulting from this evaluation is shown in Figure 28. Included in this new design were the necessary clearance grooves for the wires used in constructing the measurement bridge circuitry.

Following completion of the load-cell design, the remaining components necessary to assemble a total tibial component were designed. The design of the tibial component implant housing is shown in Figure 29. The details of the housing/stem interface junction are shown in Figure 30, detail-section A-A. The third major structural component of the tibial component, the stem, is shown in Figure 31.

Prototypes of each of these major structural components of the telemeterized total knee femoral component have been built and evaluated. In addition, all required telemetry circuits have been developed and tested. To date, no major design problems have been encountered, nor are any anticipated at this time.

In addition, all required telemetry circuits have been developed and tested.

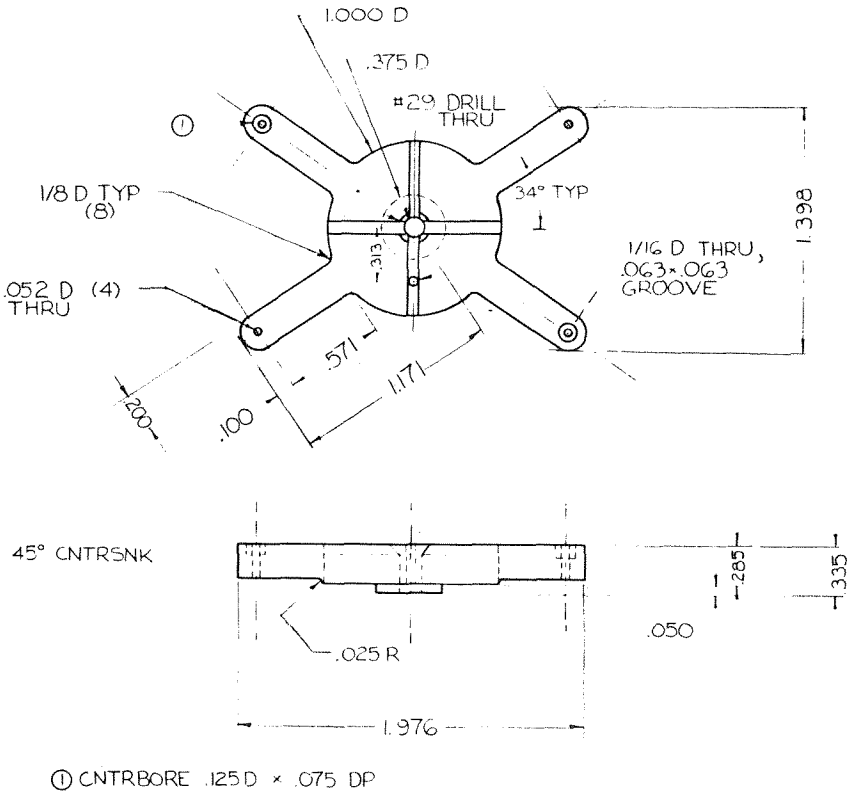


FIGURE 28.—New load-cell configuration designed to optimize the load-cell's measurement sensitivity in all desired modes while at the same time minimizing the load-cell's overall deflection.

### Current Status

At the present time, the final prototype of the telemeterized total knee tibial component is being assembled. This unit will then be calibrated and subjected to rigorous mechanical testing. Barring any unexpected problems arising from this testing, it is still anticipated that a device will be ready for implant by the summer of 1979.

**Mobility Engineering for the Severely Handicapped**
**Mobility Engineering and Development (MED), Inc.**
**7131 Havenhurst Avenue**
**Van Nuys, California 91405**
**Charles M. Scott and Ronald E. Prior, Ph. D.**

Work during this period has been centered on preparing the van-compatible wheelchair for clinical evaluation. Two units have been

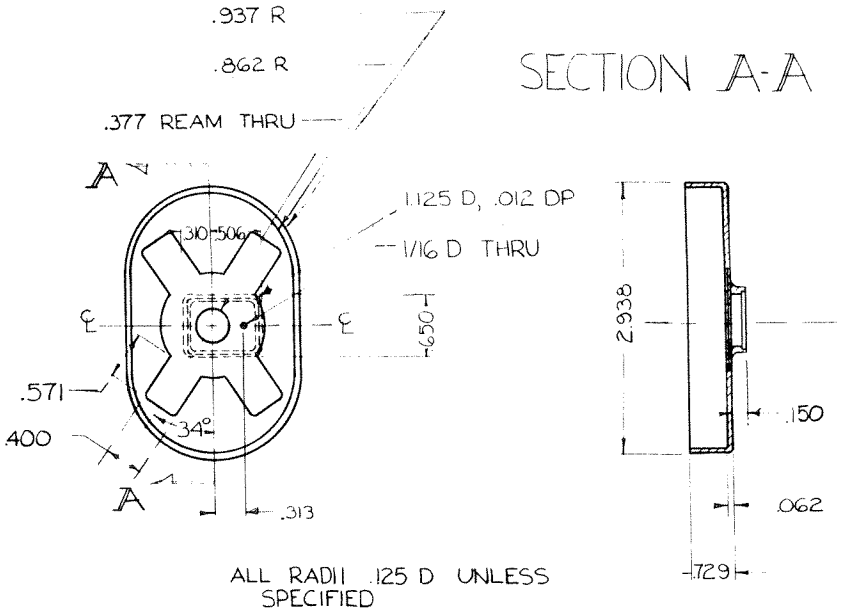


FIGURE 29.—Design of tibial component implant housing.

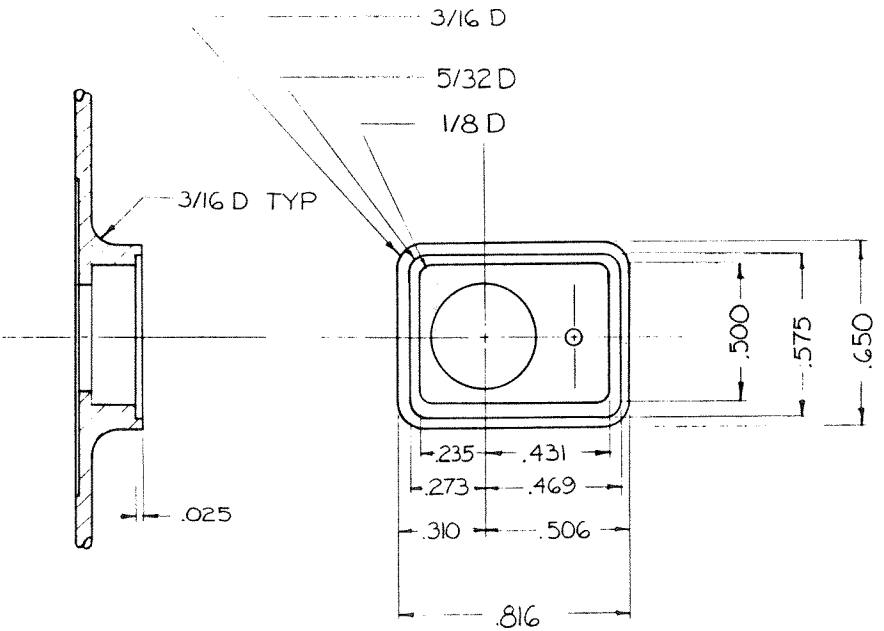


FIGURE 30.—Details of housing/stem interface junction (detail section A-A).

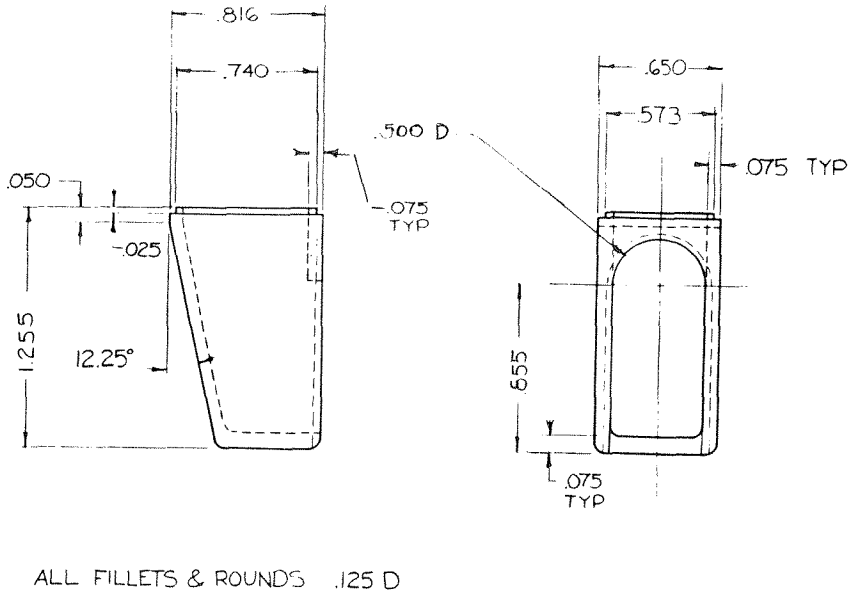


FIGURE 31.—Major structural component of the tibial component, the stem.

completed, one with power steering; the other with traditional castered front wheels. A third unit is nearing completion and will also have castered front wheels.

**Development of a Wheelchair Using a Myoelectric Control System**

**West Roxbury VA Medical Center**
**1400 Veterans of Foreign Wars Parkway**
**West Roxbury, Massachusetts 02132**
**Alain B. Rossier, M.D., Mehdi Sarkarati, M.D.,**
**George E. Crawford, Ph. D., and Jonathan Dietz**

During the period from July 1 through December 31, 1978, hardware improvements have been made on the simulated wheelchair control system. Testing has continued to include a total of four patients. Plans for continuing the investigation to include the development of control units for moving chairs have been made.

The simulated wheelchair control system basically consists of two myoelectric channels for detecting coded signals from the patient, electrical stimulation provisions for assisting the patient in timing his coded myoelectric activity, a visual display board for presenting the decoded wheelchair commands, and a microcomputer system for providing all the required decoding and control functions. This system is shown in Figure 32, including the surface electrode amplifica-

tion module (arrow), with the equipment shown in more detail in Figure 33.

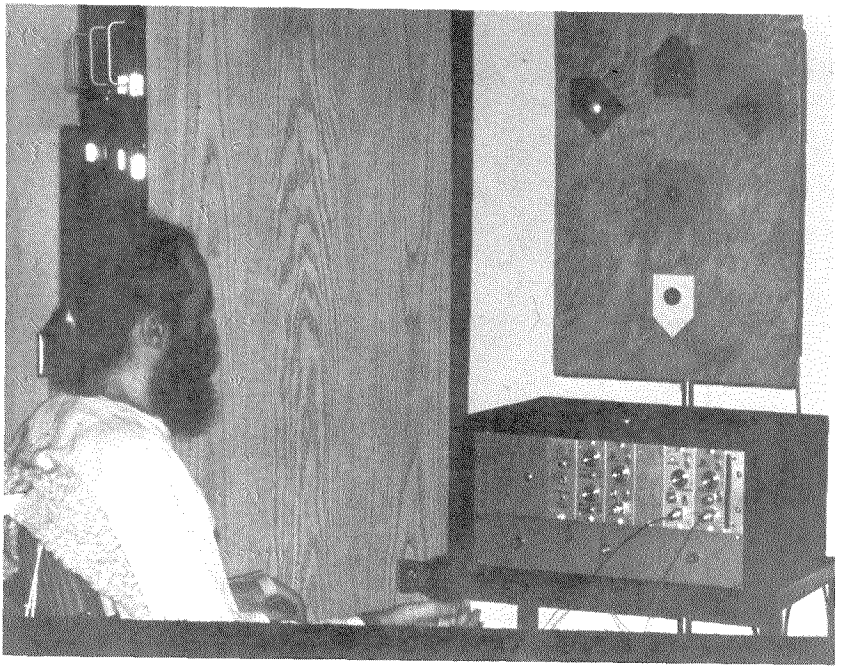

FIGURE 32.—Experimental myoelectric wheelchair control system.

During the development and early testing of the system, the microcomputer program was stored on magnetic tape and loaded into temporary RAM (random access memory) each time the system was used. During the current reporting period, all of the system memory hardware has been replaced with one 2708 EPROM (electrically programmable read only memory) integrated circuit. The program has been written such that the registers on board the microprocessor chip are sufficient for all the RAM required by the system.

Each of the four patients who have participated in this program has learned to operate the system after a few minutes of instruction. All four have shown significant improvement in proficiency (as indicated by speed of operation and error rate) after several hours of practice. The first step of the instruction procedure consists of familiarizing the patient with the generation of myoelectric activity. Provisions are made in the system hardware to facilitate this first step. The system can be switched to what is referred to as the Direct Feedback Mode. In this mode, the right half of the display board is illuminated whenever myoelectric activity in the right channel exceeds the

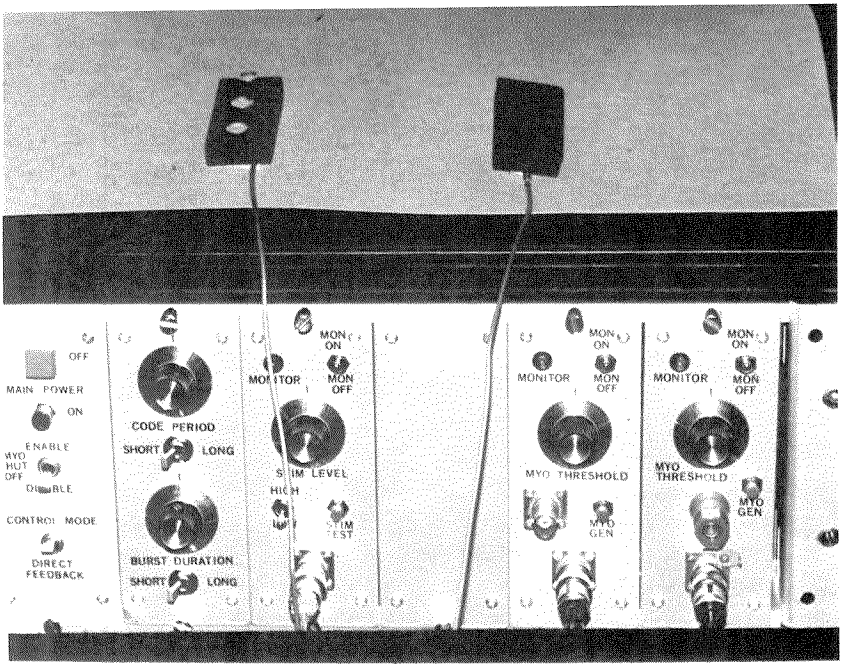


FIGURE 33. — Electronic apparatus used in the system of Figure 32.

detection threshold. The left half of the display board is similarly illuminated by the left channel activity. In this mode, the patient can directly learn to generate the myoelectric bursts used for coding commands without having to infer the results of his attempts at myoelectric burst generaton from the output of a decoding system. It has been found, in each of the four cases, that after a few minutes of practice in the Direct Feedback Mode the patient could independently initiate myoelectric activity on either channel at will.

After the short practice session in the Direct Feedback Mode, the coded sequence of myoelectric bursts required for each of the wheelchair commands is explained to the patient. Following this explanation, the system is switched to the normal Control Mode and the patient is asked to attempt to generate the different wheelchair commands. In each of the four cases, the patient could immediately generate the commands at the rate of approximately one command per second. After several hours of practice, each of the four patients could generate commands at a rate that would be adequate to control a moving wheelchair.

The positive results discussed above have led to plans to modify and repackage the system for convenient use as a wheelchair joy stick replacement. There are also plans to investigate a myoelectric coding

technique referred to as "biological microcoding." The object of microcoding is to increase the information rate that can be transferred by minute myoelectric bursts at the expense of requiring special training. Success in the microcoding investigation would provide the background for developing a second generation wheelchair control system that would require the use of only one myoelectric site for acquiring information at a rate sufficient for wheelchair control.

## Seat Cushions for the Paralyzed

**Castle Point VA Medical Center**
**Castle Point, New York 12551**
**Bok Y. Lee, M.D.**

**Veterans Administration Prosthetics Center**
**252 Seventh Avenue**
**New York, New York 10001**
**Leon Bennett, M.A.E.**

An instrument has been prepared to measure the applied pressure, shear and arteriolar blood flow in the vicinity of the ischium of a seated wheelchair user. In essence, the instrument consists of a closely packaged array of sensors placed within a thick Lucite seat, which in turn is mounted to a wheelchair.

Our expectation is that this device will discern those loading conditions leading to skin blood flow occlusion (and by projection, decubiti) in a salient anatomical area. Hopefully, the contribution of shear forces to occlusion, long a matter of conjecture, will be clarified. Subjects displaying various pathologies (paralysis, amputation, geriatrics) will be tested to discern patterns of force vs. occlusion characteristics.

The instrumental array has been successfully tested previously, using the palms of healthy subjects, with results given in the Archives of Physical Medicine and Rehabilitation (In press).

## Seating Systems for Body Support and Prevention of Tissue Trauma

**Palo Alto VA Medical Center**
**3801 Miranda Avenue**
**Palo Alto, California 94304**
**Inder Perkash, M.D.**

**Stanford University**
**Children's Hospital**
**Rehabilitation Engineering Center**

**520 Willow Road**
**Palo Alto, California 94304**
**Maurice Le Blanc, C.P. and Wallace Motloch, C.O.**

Since the last report (June 30, 1978) the main thrust of effort has been concentrated in four areas:

1. Modification of shape to provide pressure distribution consistent with the Maximum Allowable Pressures (as per Rancho Los Amigos Progress Report, 1975);
2. Fabrication of silicone mold for third-generation pour;
3. Pouring of ten cushions; and
4. Start of testing of new cushions at Palo Alto VA Medical Center, Spinal Cord Injury Center.

The initial trials of the new shape showed pressure readings in a much more acceptable range. Areas like bladder neck, coccyx, ischii and trochanters appear satisfactory but the posterior thigh pressures are still too low. To increase these posterior thigh pressures, Plastizote pads were laminated into the polyurethane foam (Fig. 34 and 35). The exact shape and size of these Plastizote pads is now being determined by experimentation.

Waterproofing the foam pad still remains a problem. To date the following approaches have been tried:

1. Polyurethane, self-skinning foam—the skin is not of good

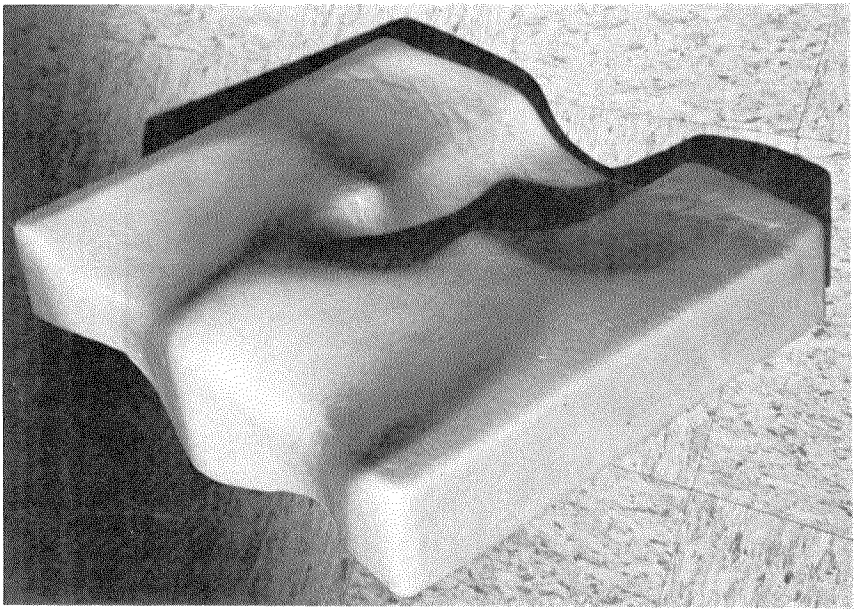

FIGURE 34.—Front view of VA contoured cushion.

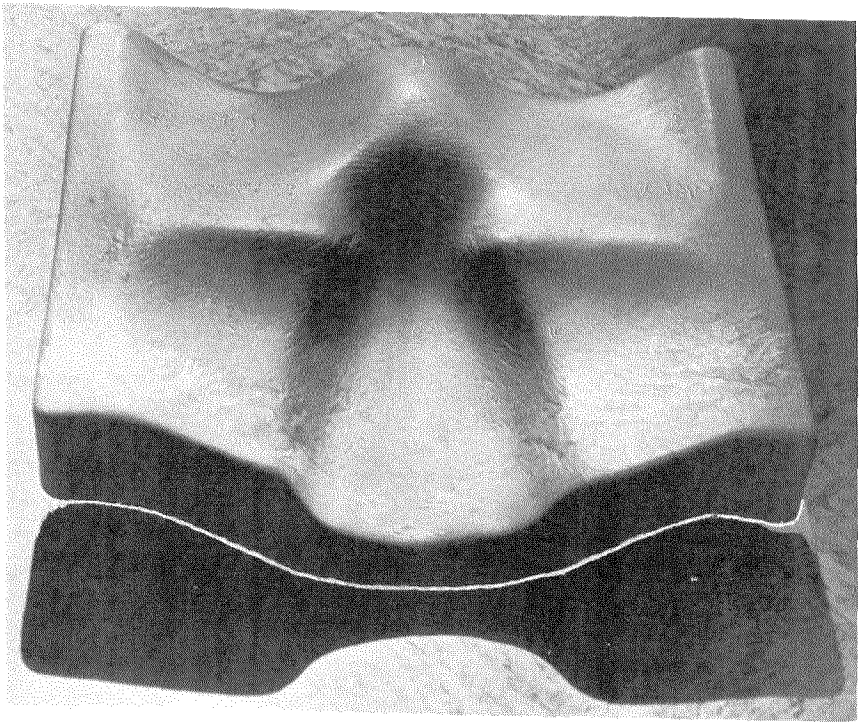

FIGURE 35.—Back view of VA contoured cushion.

enough quality to water-proof the cushion.

2. Urethane sheet envelope—this is an excellent material but can only be obtained in sheets. A cover that is an integral part of the cushion would be preferred.
3. Glove vinyl with two way stretch backing—is presently being used but has to be sewn up in upholstery style. This places the seams in the most undesirable locations.
4. Glued-on latex sheet—this is presently used. Durability of bonding agent and latex skin are being tested.
5. Spray vinyl skin in mold, then pour foam—this produces skin but of poor durability.
6. Polyethylene sheet envelopes—not as stretchy or durable as urethane, but inexpensive.
7. Porous Teflon skin backed on mold, then pour foam—this is a promising possibility but rather expensive. This process calls for a high-gloss aluminum mold, and since the cushion shape has not been finalized, this approach is being reserved for future use.

## Publication

1. Progress Report Booklet: 4/1/77–9/30/77, Children's Hospital at Stanford, 520 Willow Road, Palo Alto, California, 94304.

## Maxillofacial Restorative Materials and Techniques

**Maxillofacial Research**
**Temple University School of Dentistry**
**Broad Street and Montgomery Avenue**
**Philadelphia, Pennsylvania 19122**

**Wilmington VA Medical Center**
**1601 Kirkwood Highway**
**Wilmington, Delaware 19805**

**John F. Lontz, Ph. D., and James W. Schweiger, D.D.S., M.S.**

Polydimethyl siloxane (PDM siloxane for short) continues to rank unequivocally as the biomaterial of choice for maxillofacial reconstructions on the basis of:

a. chemical and biological resistance,

b. exceptional tear resistance much like that of physiological tissue, and

c. continued demonstrated non-toxicity in the human excised donor (HED) tissue toxicity testing program.

The research and development program on PDM siloxane continues along the broad front of five principal programs of the Comprehensive Development Plan listed in a previous report (1) and presently augmented by a sixth, highly essential program, namely, VI Production, for which equipment and facilities have been set up at the Wilmington Veterans Administration Medical Center.

### Status of Comprehensive Program

The setting up of the production facilities for PDM siloxane pigmented stocks, within the direct control of the overall project rather than depending, even initially, upon extramural production or even small-lot preparations in separate clinics or centers for maxillofacial reconstruction, is deemed highly desirable for two reasons.

The first reason is that a need exists for rapid dissemination of the PDM siloxane of uniform test quality to widened familiarization, usage, and standardization of safe and effective prosthetic reconstructions throughout the VA system. Therefore, one-pound lots of intrinsic pigmented stocks are being made available to all VA clinics (and to certain non-VA prosthetic clinics, some of which service veteran patients — this wider dissemination will permit much more extensive feedback of clinical results).

Second, this chemically identifiable PDM siloxane, in view of its proven non-toxicity on orofacial HED tissues (2), is being extended from its initial biomaterial role in externally affixed prosthetic maxillofacial reconstruction to internal insertives and implants in direct and

indefinite contact with sensitive mucosal lining and tissues. In this regard, interest has been indicated for use as esophageal inserts, linings to replace dura mater especially in pediatric cases, otological membranes, and so on.

While the competitive biomaterials for maxillofacial prostheses, notably those derived from polyvinyl chloride plastisols (3) and polyurethanes (4), continue to serve usefully in maxillofacial reconstruction, severe limitations with regard to durability and safety to mucosal tissues have become evident (5, 6). While some of the limitations of the competitive prosthetic polymers can be ascribed to innate deficiency in chemical resistance, a major share of the limitations and shortcomings in safety and durability (as now being prescribed by the recently enacted New Medical Devices Act of 1976) (7) can be ascribed to lack of materials standardizations for quality and purity, and to lack of formulations to replicate tissue elasticity (8) and cosmetic matching (9). Thus the production program now in progress is aimed toward control and standardization of chemically identifiable PDM siloxane as an effective and durable prosthetic material, to include orofacial and not just maxillofacial reconstructions, and as a proven non-toxic biomaterial under current statutory FDA requirements.

## I. Product Development Program

This phase of the Comprehensive Development Plan has been directed toward assessing durability of PDM siloxane, in comparison with competitive materials, by a battery of end-use tests that would anticipate the likely or possible deterioration in long-term, indefinite usage. For this assessment a battery of exposure conditions has been devised, using the test description and conditions listed in Table 1. From these, appropriate quality standards much like those promulgated by the American Society for Testing and Materials and by the American Dental Association would be devised, either in present descriptive form of testing or with appropriate modification.

Durability is, itself, a significant criterion of effectiveness under the purview of FDA standards (7). The principal subcriteria of durability include maintenance of tensile characteristics, tear resistance, and non-toxicity, following normally expected exposure to autoclaving, to hygienic cleansing with sodium hypochlorite, absorption of lipid triglycerides, and exposure to ultra-violet light. The current standard PDM siloxane made from elastomer and oligomer is listed in Table 2 with all ingredients (including the pigments for a 6-member selection panel of variable yellow-red ratios).

*Tensile Characteristics—Changes from Exposure Tests*

Table 3 summarizes the changes (expressed in percent) from the

TABLE 1.—*Provisional Exposure Conditions for Assessing Prosthesis Durability in Long-Term, Repeated Usage*

| Exposure[a] | Temperature °C | Time |
|---|---|---|
| Autoclaving (clinical practice) | 110–125 | 15–30 Min |
| Hypochlorite disinfecting (home routine)[b] | 23–25 | 16 Hr |
| Triglyceride absorption (corn oil)[c] | 60–65 | 48 Hr |
| Ultra-violet | 23–25 | 15–30 Days |

[a] These conditions have yet to be finalized consistent with expected usage for several years. Test conditions may be intensified in order to compress the time scale from reality to test expediency.
[b] U. S. P. 5 percent sodium hypochlorite solution.
[c] Cooking grade of Mazola, a readily available, inexpensive medium less likely to contain oncogenic adventitiae.

TABLE 2.—*Complete Ingredient Composition of Internally Pigmented PDM Selection Panel of Six Shades*

| Ingredient | Yellow dominance | | | | Red dominance | |
|---|---|---|---|---|---|---|
| | SY-1 | SY-2 | SY-3 | SR-3 | SR-2 | SR-1 |
| Polysiloxane[a] | 78.4 | 78.8 | 79.0 | 79.0 | 78.8 | 78.4 |
| Oligomer[b] | 19.6 | 19.7 | 19.8 | 19.8 | 19.7 | 19.6 |
| Catalyst[c] | 0.98 | 0.99 | 0.99 | 0.99 | 0.99 | 0.98 |
| Pigment Conc'te. | 0.98 | 0.493 | 0.247 | 0.247 | 0.493 | 0.297 |
| Polysiloxane | 0.473 | 0.237 | 0.119 | 0.124 | 0.248 | 0.493 |
| Oligomer | 0.315 | 0.159 | 0.080 | 0.083 | 0.163 | 0.328 |
| Red flock | 0.099 | 0.050 | 0.025 | 0.026 | 0.052 | 0.102 |
| Yellow oxide | 0.015 | 0.008 | 0.004 | 0.004 | 0.008 | 0.015 |
| Titania | 0.079 | 0.039 | 0.020 | 0.010 | 0.021 | 0.041 |
| Corresponding tristimulus color indices by Hunter Lab measurements | | | | | | |
| Reflectance | 67.9 | 69.5 | 74.7 | 79.2 | 75.2 | 70.3 |
| Transmission | 32.1 | 30.5 | 25.3 | 20.8 | 24.8 | 29.7 |
| Redness("a") | 9.0 | 7.5 | 3.8 | 0.7 | 3.8 | 11.2 |
| Yellowness ("b") | 18.7 | 19.7 | 18.1 | 7.9 | 10.6 | 12.8 |
| "b"/"a" Ratio | 2.08 | 2.6 | 4.76 | 11.29 | 2.79 | 1.14 |

[a] Silicone gum Stock GE 4524 U. See Reference (1).
[b] Dow Corning DC 200 serving as oligomer. See Reference (1)
[c] Polymerization catalyst, 2,4-dichlorobenzoyl peroxide.

non-exposed controls for competitive room-temperature-cured (RTV type) silicone elastomers using tin catalysts, and for the milled PDM siloxane using peroxide catalysts and thermally polymerized in dental-stone molds. Included also are the competitive polyvinyl chloride plastisol (3) and polyurethanes (4). Except for PDM siloxane, the remaining competitive materials showed evidence of deterioration or change in the tensile modulus. All the silicones showed resistance to autoclaving and to hypochlorite sanitizing, but on exposure

TABLE 3.—*Effect of Provisional Exposure Test Conditions on Initial Tensile Modulus of Prostheses Materials*

| Prosthesis Material | Exposure Test | Modulus lb/sq in | Percent change[a] |
|---|---|---|---|
| Polyisoprene (natural rubber) (Source: surgical grade) | None (control) | 590 | – |
| | Autoclaving | 620 | + 5 |
| | Hypochlorite | 610 | + 3 |
| | Triglyceride (corn oil) | 420 | −29 |
| RTV Silicone (Silastic 382) | None (control) | 290 | – |
| | Autoclaving | 315 | + 9 |
| | Hypochlorite | 290 | 0 |
| | Triglyceride (corn oil) | 260 sw | −10 |
| RTV Silicone (MDX 4 4210) | None (control) | 155 | – |
| | Autoclaving | 170 | + 9 |
| | Hypochlorite | 165 | + 6 |
| | Triglyceride (corn oil) | 100 sw | −35 |
| RTV Silicone (MDX 4 4210) with DC Fluid (80/20) | None (control) | 65 | – |
| | Autoclaving | 65 | 0 |
| | Hypochlorite | 65 | 0 |
| | Triglyceride (corn oil) | 40 sw | −38 |
| HTV Silicone (PDM Siloxane) with DC Fluid (80/20) | None (control) | 65 | – |
| | Autoclaving | 65 | 0 |
| | Hypochlorite | 65 | 0 |
| | Triglyceride (corn oil) | 63 | −3 |
| Polyvinyl chloride plastisol Type III Reference (2) | None (control) | 470 | – |
| | Autoclaving | 620 | +32 |
| | Hypochlorite | 570 | +21 |
| | Triglyceride (corn oil) | 310 sw | −31 |
| Polyurethane (N.I.D.R. contract) Reference (13) | None (control) | 450 | – |
| | Autoclaving | 620 discolored | +38 |
| | Hypochlorite | 360 | −20 |
| | Triglyceride (corn oil) | 220 sw | −51 |
| Polyurethane (proprietary) Reference (3) | None (control) | 120 | — |
| | Autoclaving | Degraded | (not testable) |
| | Hypochlorite | Degraded | (not testable) |
| | Triglyceride (corn oil) | Dissolved | (not testable) |

to a nominal glyceride (Mazola corn oil) substituting for possible skin lipid exudates, the RTV silicones showed swelling and a significant lowering of the tensile modulus, amounting to marked tactile softening.

*Recovery from Strain and Hysteresis Loss (Elasticity)*

In the case of many elastomers and polymers made for flexibility and/or low tactile modulus or softness, when they are strained (stretched) the result can be excessive non-recoverable extensions which can be detrimental to proper fit. Recovery from reasonable strain or stretching (provisionally up to 100 percent) and the attendant hysteresis loss (such as depicted in Figure 36 for several illustrative cases) is usually ascertained and adjusted by polymer structure in the course of competent product development, especially for minimizing likely deterioration due to exposure to chemical and normal maintenance.

Table 4 summarizes these two elastic characteristics, comparing values of the initial, unexposed material against the values resulting from the exposure tests indicated in Table 1. In this series the silicone elastomers show higher recovery from straining and the lowest series of hysteresis loss, a feature in their favor compared to the other competitive elastomers.

*Tear Resistance*

Prosthetic devices, especially for external facial reconstruction, often depend upon thin edges in order to blend in with the adjacent facial tissues. Because such thin edges can present serious risk of tearing, tear resistance is an important characteristic. This implies not just the tear strength, but also an innate resistance to propagation of a tear once initiated. Living tissue, including human and other dermal tissue, has the unique feature of resisting the progress of tearing by the complexity of its molecular architecture (Fig. 37) with its links and hinges and with coiled and crystalline sites, undergoing myriads of reversible transitions from the extremes of unstructured to native structure. The living tissues with these complex configurations tend to resist tearing, with considerable extension or strain taking place before the rupture ensues. The variable physiological states of hydration, lipid content, etc., with dynamic hydrogen bonding, provide significant complex energy roles for resistance to imposed strain.

TABLE 3 FOOTNOTES BELOW

[a]Percent change values below 10 percent are not considered significant at this time, but may become significant with extended exposures either in temperature or in time of testing.

sw Indicates swelling of the prosthesis material, an undesirable effect with commercial elastomers leading to solvent stress cracking.

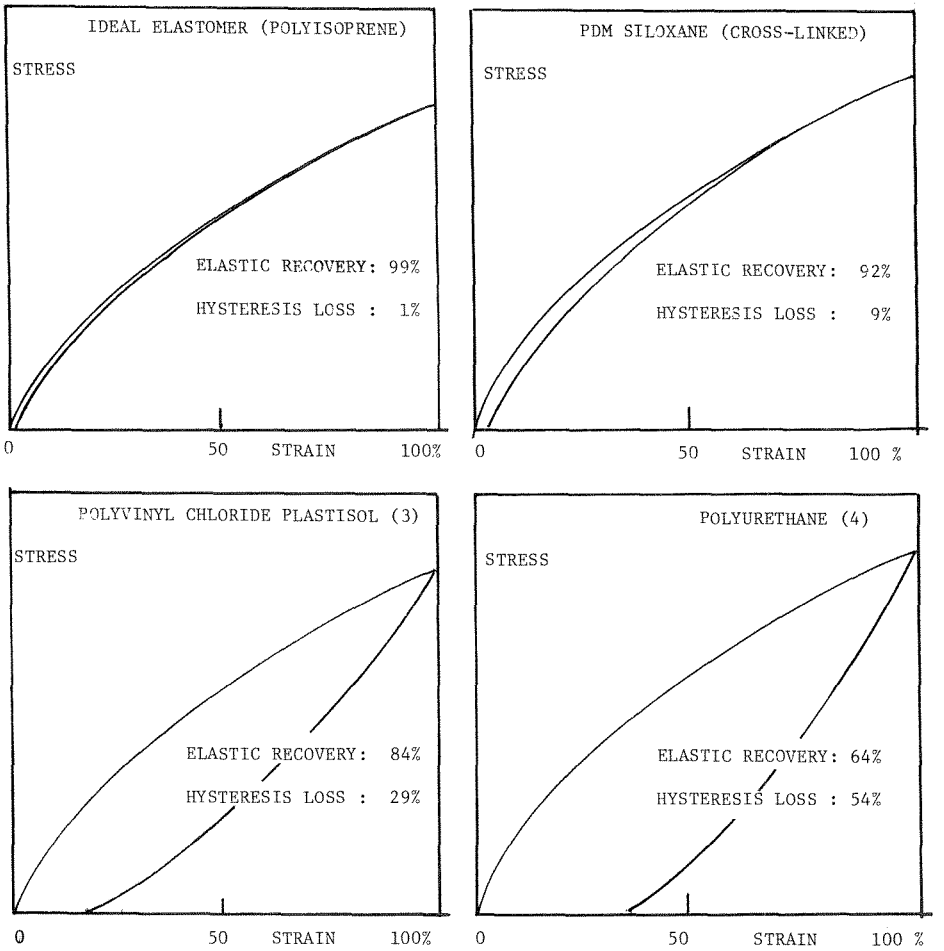


FIGURE 36.—Elasticity (stress-strain) profiles for elastic recovery and hysteresis loss with selected, competitive prosthesis elastomers.

In contrast, synthetic polymers and elastomers are characterized by simpler configurations and usually straightforward response to tearing action, unless special variations in the molecular architecture are imposed—as has been the case of the current development of PDM siloxane. The thermally (HTV), peroxide-radical-polymerized molecular configuration serves to correct for the inadequate tear resistance and sensitivity of the conventional room-temperature (RTV) tin-catalyzed silicone elastomers. Figure 38 is a model depicting the molecular architecture of these two principal forms of silicone (RTV vs HTV), serving to provide a mechanistic explanation of how to attain high tear resistance based on segmented cross-linkages between

TABLE 4.—*Comparison of Elastic Recovery of Competitive Prosthesis Materials (Non-exposed Controls)*[a] *(A.S.T.M. Test Designation D412 mod.) (100 percent strain and return)*

| Prosthesis Material | Percent Recovery from strain | Percent Hysteresis loss |
|---|---|---|
| Polyisoprene (natural rubber) (Surgical grade) | 99-100 | (ca 2) |
| RTV Silicone (Silastic 382) (Source: Dow) | 96 | (ca 8) |
| RTV Silicone (MDX 4 4210 (100/0) (Source: Dow) | 94 | (ca 9) |
| RTV Silicone (MDX 4 4210 with DC 200 Fluid (80/20) | 88 | 24 |
| HTV Silicone (PDM Siloxane with DC 200 Fluid (80/20)) | 92 | (ca 7-9) |
| Polyvinyl chloride plastisol (Type III Reference (2)) | 84 | 29 |
| Polyurethane (N.I.D.R. contract) Reference (13) | 88 | 45 |
| Polyurethane (proprietary) Reference (4) | 64 | 57 |

[a]Provisional exposure tests as indicated in Table 1 are being limited to PDM siloxane, as other competitive prosthesis materials indicate hysteresis loss too-high to warrant exposure tests for elasticity.

the main silicone chains, just like the links and/or hinges depicted in Figure 37. This a priori explanation now sets the stage for the ensuing experimental verification and recounting of the test results.

*Measurement of Tear Resistance*

The single tear method specified by A.S.T.M. Designation D 1938 is used as the principal procedure for ascertaining the tear resistance based on the load extension chart (actually a stress-strain profile) from which the tear propagation force in grams (ounces or pounds) is ascertained using, for example, the Instron load-extensionmeter. Figure 39 depicts the tearing profiles of three competitive prosthesis materials. The first of these, RTV silicone (Silastic 382), reveals a characteristic case of autopropagation; that is, once a tear is started at the initial load level, the tearing proceeds at a considerably lessened force. Polyvinyl chloride and a proprietary polyurethane (Fig. 39c) maintain a steady tearing force to the end of the specimen. Still uniquely different (Fig. 40) is the tear profile of PDM siloxane, much like that of a physiological tissue (chicken skin) shown with it, wherein the tear for an extended elongation does not occur—instead, the response is a viscoelastic elongation to over ten times the length of the available specimen. In contrast, the RTV Silastic, and the polyvinyl

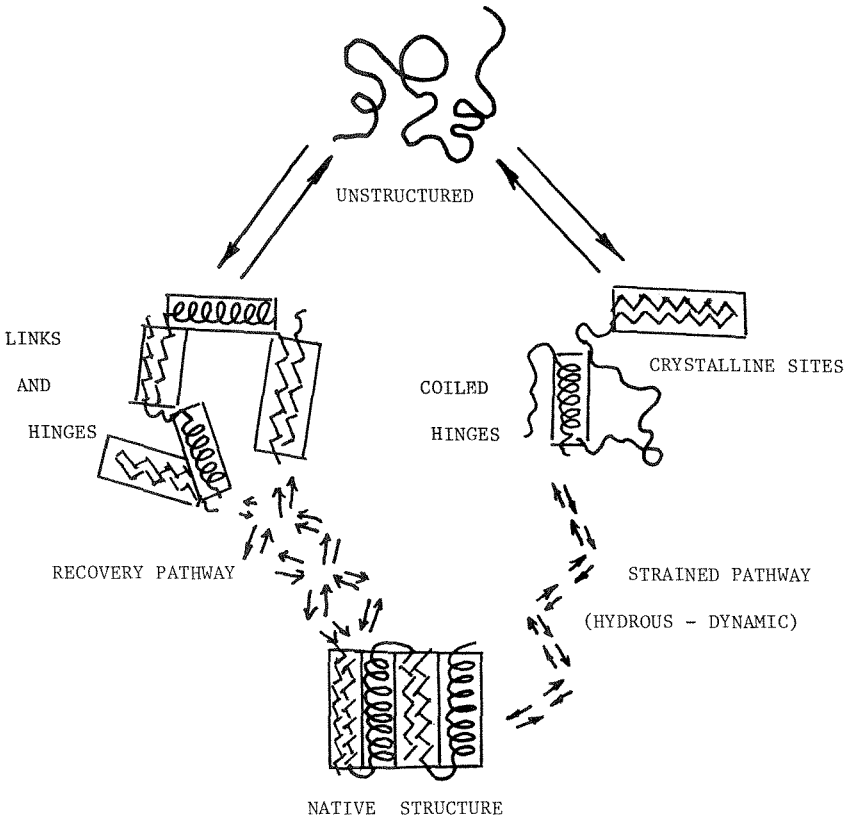


FIGURE 37.—Molecular architectural model of tissue protein configuration.

chloride plastisol, and the proprietary polyurethane, all show irrevocable tearing from as little as 50 percent elongation. The PDM siloxane does not show any tearing up to the extension of 1000 percent, which is the extension at the ultimate stress to failure.

Utilizing the various exposure conditions listed in Table 1, the tear propagation force (in grams) for a series of competitive prosthesis materials is summarized in Table 5. Of the series, both the RTV and HTV silicones maintained the tear resistance following autoclaving and following hypochlorite sanitizing, but only the milled thermally-polymerized (HTV) PDM siloxane remained unchanged in the corn oil triglyceride exposure, which apparently weakens the RTV tin catalyst links but not the HTV chain cross-links. The polyvinyl chloride plastisol and the proprietary polyurethane showed unacceptable inordinate decreases in tear propagation force in all three of the exposure tests. It can be presumed that innate chemical resistance of the siloxane repeat configuration ($O-Si(CH_3)_2-$) and the deliber-

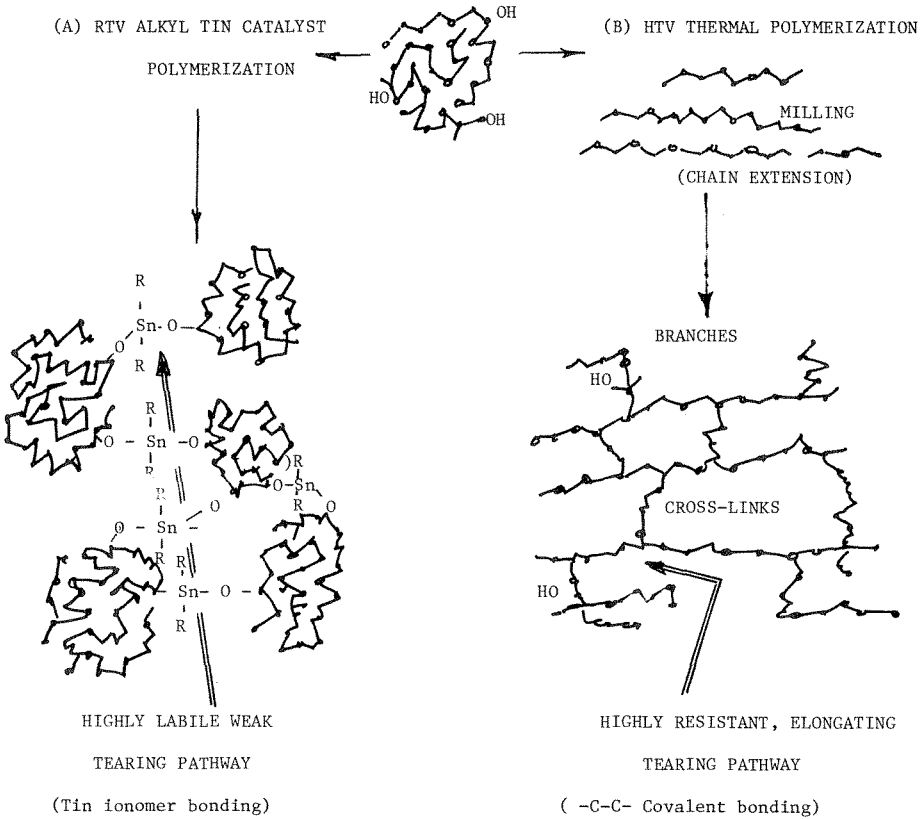


FIGURE 38.—Significance and differences in molecular structure of siloxane configuration (RTV vs HTV) on tear resistance.

ately imposed cross-linking (Fig. 38) provide the required durability for an effective prosthesis, considering the repeated sanitizing requirement. The remaining competitive materials would fail and hence would not fulfill the requirement of being effective.

The overall product development program constitutes the principal efforts aimed towards appropriate specification tests for effectiveness and especially for durability, with tests derived from realistic clinical use, including hygienic maintenance. The battery of exposure tests listed in Table 1 is applied to the provisional standard PDM siloxane composition comprising 80 parts elastomer stock (GE 4524U or its Dow equivalent) and 20 parts of oligomer with internal pigmentation to provide a range of yellow (carotene) to red (hemoglobin) ratios of coloration listed in Table 2. The 80/20 composition, and other modified ratios, will serve as the principal formulation for eventual FDA clearance for safe and effective medical devices for which toxicity tests are carried out for the comprehensive program.

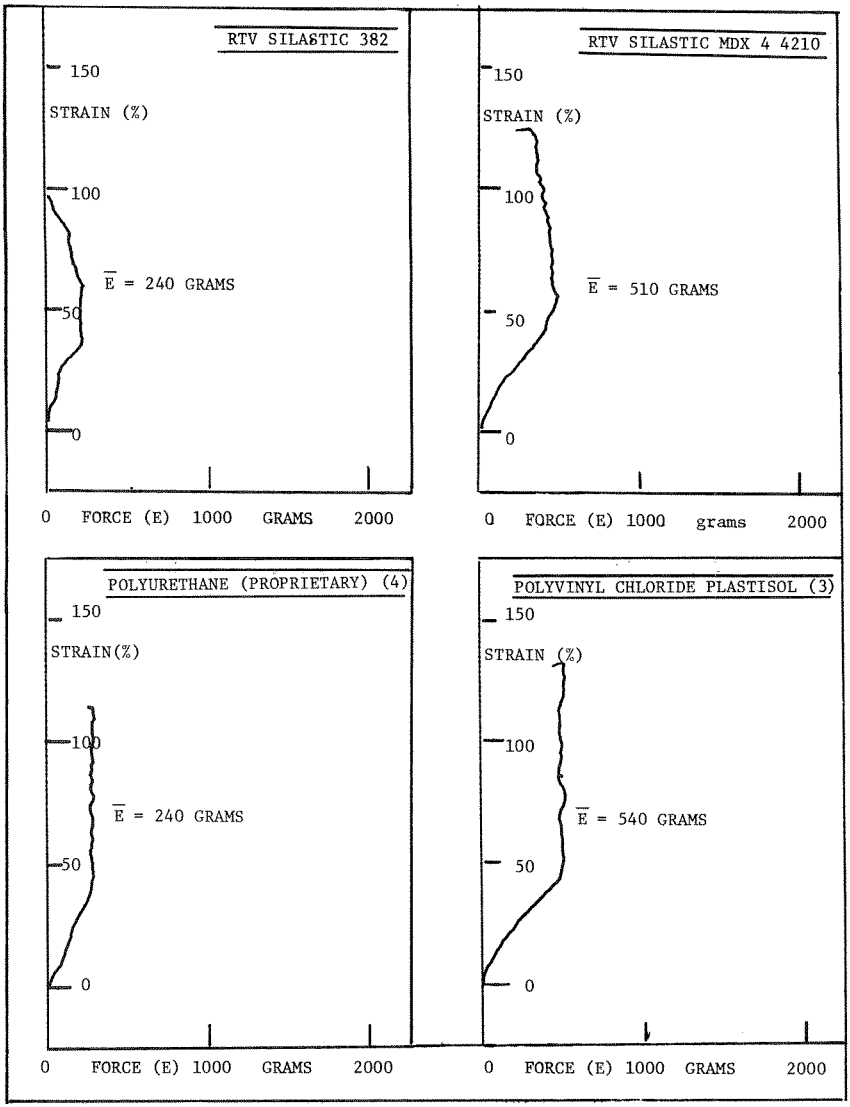


FIGURE 39.—Tear propagation resistance (A.S.T.M. D 1938) with selected competitive prosthesis elastomers.

## II. Fabrication Techniques

The fabrication of maxillofacial prostheses utilizes the conventional dental stone molding (such as that commonly practiced in dental laboratories for acrylics) in the proper, effective molding of PDM siloxane elastomer stock. The provisionally standard conditions, namely 100±5 deg C for 2 hours, constituting a temperature intermediate to between the minimal temperature (80 deg C) needed for

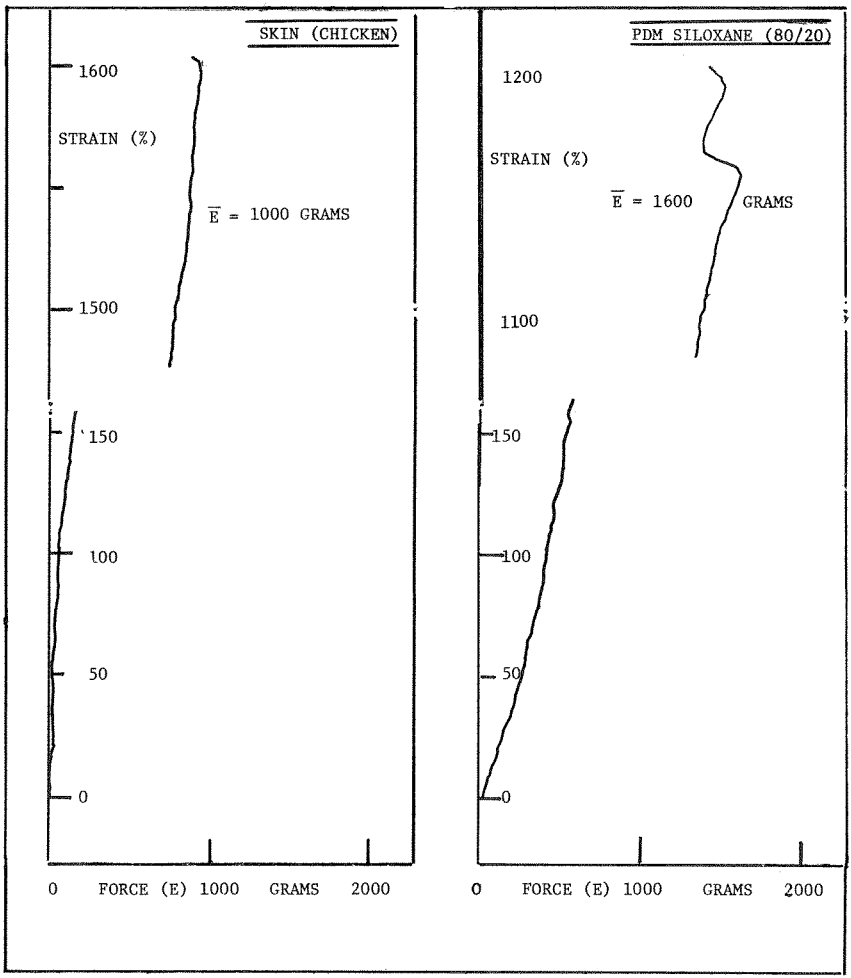


FIGURE 40.—Tear propagation resistance (A.S.T.M. D 1938) comparing PDM siloxane (80/20) elastomer with skin (chicken).

free-radical polymerization initiated by a benzoyl peroxide catalyst, and maximum temperature (120 deg C) which is not to be exceeded so as to ensure maintaining the stable hemihydrate of the stone mold for repeated molding. The provisional polymerization conditions serve to provide a balance of chain branching, along with cross-linking, for the extended (milled) polydimethyl siloxane chain.

Polymerization schedules (using thermocouples embedded into the stone mold) have been worked out for a large-capacity oven (8 simultaneous moldings) and for single-molding or small-capacity ovens for several clinics and laboratories which are participating in the field evaluation program discussed in a following section.

TABLE 5.—*Effect of Provisional Exposure Test Conditions on Resistance to Tear Propagation of Prosthesis Materials (A.S.T.M. Test Designation 1938)*

| Prosthesis Material | Exposure Test | Force to Tear Grams | Percent change |
|---|---|---|---|
| Polyisoprene (natural rubber) (Source: surgical grade) | None (control) | 720 | – |
| | Autoclaving | 570 | −21 |
| | Hypochlorite | 510 | −26 |
| | Triglyceride (corn oil) | 420 | −42 |
| RTV Silicone (Silastic 382) | None (control) | 270 | – |
| | Autoclaving | 270 | 0 |
| | Hypochlorite | 280 | + 4 |
| | Triglyceride (corn oil) | 100 sw | −63 |
| RTV Silicone (MDX 4 4210) | None (control) | 510 | – |
| | Autoclaving | 510 | 0 |
| | Hypochlorite | 520 | + 2 |
| | Triglyceride (corn oil) | 210 | −59 |
| | Ultra-violet | 510 | 0 |
| RTV Silicone (MDX 4 4210), with DC 200 Fluid (80/20) | None (control) | 230 | – |
| | Autoclaving | 230 | 0 |
| | Hypochlorite | 210 | − 9 |
| | Triglyceride (corn oil) | 110 | −52 |
| HTV Silicone (PDM Siloxane) with DC 200 Oligomer (80/20) | None (control) | 1100 | – |
| | Autoclaving | 1100 | 0 |
| | Hypochlorite | 1200 | + 9 |
| | Triglyceride (corn oil) | 980 | − 9 |
| | Ultra-violet | 1200 | + 9 |
| Polyvinyl chloride plastisol (Type III Reference (2)) | None (control) | 540 | – |
| | Autoclaving | 380 | −30 |
| | Hypochlorite | 460 | −15 |
| | Triglyceride (corn oil) | 280 | −48 |
| | Ultra-violet | 520 | − 4 |
| Polyurethane (N.I.D.R. contract) Reference (13) | None (control) | 580 | – |
| | Autoclaving | 380 | −34 |
| | Hypochlorite | 470 | −19 |
| | Triglyceride (corn oil) | 220 sw | −62 |
| | Ultra-violet | 430 | −26 |

| | | | |
|---|---|---|---|
| Polyurethane (proprietary) Reference (3) | None | 240 | – |
| | Autoclaving | degraded to gum | −100 |
| | Hypochlorite | 100 | − 58 |
| | Triglyceride (corn oil) | dissolving | −100 |
| | Ultra-violet | became gum | −100 |

Note: Percent change values below 10 percent are not considered significant statistically, but may become significant with extended exposure either in increased temperature or in time of exposure testing.

sw Indicates swelling of the prosthesis material, an undersirable effect with commercial elastomers leading to solvent stress cracking.

During the period of this report, 216 orofacial prostheses have been fabricated for the intramural clinical program of this project and for a number of interested outside clinics. Since the inception of the maxillofacial program using the tear-resistant form of polydimethyl siloxane, over a thousand (1154) diverse orofacial prosthetic devices have been fabricated. This includes not only the prostheses for clinical support but also demonstration prostheses for assistance at outside clinics. These clinics have expressed a need to replace either polyvinyl chloride or polyurethane for one or more reasons, usually because of dependence on expensive metal molds and (not the least) because of inadequate chemical resistance, tear resistance, and biological compatibility.

### III Pigmentation and Cosmetic Matching

As an important feature of standardization, a tentative 6-member internally pigmented panel of stock 80/20 elastomer/oligomer compositions is being produced in one-pound quantities. This internally pigmented panel provides a range of coloration from a dominant yellow (carotene) shade (SY) to a dominant red (hemoglobin) shade (SR) listed in Table 2 with the Hunter Digital Color Difference spectrometer values.

The six-member panel of internally pigmented stock is expected to take care of a substantial proportion of the diverse racial internal coloration. Over the basic structure, the prosthesis specialist can apply the additional coloration including melanoid spots, freckles, arterioles, etc., by external cosmetic matching to the individual subject. The tentative six-member panel of production stocks utilizes nontoxic, noncarcinogenic pigments, notably yellow iron oxide for the internal carotene, and red rayon flock for the internal arteriole coloration.

### IV. Toxicity Testing

This phase of the Comprehensive Development Plan ranks high

among the over-all priorities of the project. It is aimed at demonstrating that the PDM siloxane is safe to human tissues, as is required under the current FDA regulatory provisions (10). As indicated in a previous report (BPR Spring 1978, 145–151), a novel approach of direct relevance to individual human subjects has been adopted by using a broad range of human excised donor (HED) tissues. The approach also tends to demonstrate that no growth inhibitive, or morphological, effect is evident when a test section of a fabricated PDM siloxane prosthesis is imposed during the tissue culturing.

The collection of HED orofacial tissue reported previously (gingival and nasal mucosa) has been expanded to include other orofacial tissues, especially from the soft palate, trachea, larynx and esophagus, which are involved in head and neck cancer surgery cases which also require prosthetic devices—for which the PDM siloxane is eminently suited. Table 6 summarizes a number of a variety of orofacial tissues tested with samples from one-pound production lots of the internally pigmented panel stocks of PDM siloxane. This type of data is being accumulated in order to provide qualifying data for pre-market approval, which will have to be applied for under the current FDA provisions, with demonstrated application of good manufacturing practices. This project is aimed toward providing these requirements with detailed operative procedures, from starting materials to finished prostheses which have had actual exposure to sanitizing treatments.

The favorable HED tissue toxicity testing results on PDM siloxane, as disclosed in a previous report (2) and in several presentations, has stimulated interest for such uses of PDM siloxane for ophthalmic and orbital membranes and as an artificial dura mater for which appro-

TABLE 6.—*Accumulation of HED Orofacial Tissues Showing No Toxic Response with PDM Siloxane Prostheses (See Reference (2)—Figure 12, Biometric Data Base)*

| HED Tissue type | Total to date | Age range | Radiation cases[a] |
|---|---|---|---|
| Skin | 3 | 9-48 | 0 |
| Lip | 2 | 50-56 | 1 |
| Nasal mucosa | 8 | 20-54 | 1 |
| Gingiva | 12 | 19-60 | 0 |
| Soft palate | 1 | 54 | 0 |
| Pharyngeal | 2 | 57-60 | 1 |
| Laryngeal | 1 | 29 | 0 |

[a]The cases which have received radiation in the course of cancer therapy are of particular concern, as the contact of mucosal tissues is suspect of initiating or potentiating carcinogenicity in remote vital organs as shown by Hueper (6) in experimental animal tests. A significant proportion of maxillofacial reconstructions are for patients who have been given serial radiation therapy.

priate tissue culture testing is planned in order to test for biocompatibility.

Currently, a major portion of the HED tissue culture toxicity testing is now being directed toward surveillance of chromosomal characteristics, to further augment the validity of the visual morphological assessment. This program will involve, in due course, progressive tracing of the chromosomal characteristics influenced by prolonged tissue growth in direct contact with PDM siloxane surface beyond the current 3-to-14-day test duration. The effort is also intended to include a novel technique for ascertaining oncogenicity during HED tissue testing by the sister chromatid exchange technique (11), which may replace the Ames Salmonella/microsome mutagenicity test (12). The chromosomal assessment in both these programs can serve most constructively in providing proof of safety to human tissue and consequent cytogenetics, especially for long-term insertive and implantation PDM siloxane artifacts and medical devices.

### V Field (End Use) Evaluation of Fabricated Prostheses

The exceptional quality of the PDM siloxane in regard to chemical resistance and high tear resistance, coupled with simple, inexpensive moldability in dental stone molds, continues to attract participation in end-use evaluation from nearly a score of outside maxillofacial prosthetic services, including participants in Holland and Norway. The field evaluation participating program (Fig. 41) is aimed toward gradual replacement of polyvinyl chloride and polyurethane prostheses. Despite their shortcomings, these are tolerated, but only because there is no manufacturing source for the milled, internally pigmented PDM siloxane stock. As far as the needs for the Veterans Administration are concerned, the on-coming production in the current project can accomodate all VA needs.

For the participants, the program provides a complete stock of the internally pigmented six-membered panel in 1-lb lots, a complete set of pigments for external cosmetic matching, and a set of directions for molding in dental stone mold and for cosmetic matching. In return, the participants return at least one molding from each one of the 6-member panel for inspection of the formed prosthesis. Reports on their quality and suggestions on prosthesis design are proferred to the participants. This program had been informally initiated in early 1978, after the HED toxicity tests showed no toxicity for PDM siloxane prostheses. For the VA involvement in prosthetics, this participative program was formally proferred at the conference of orthotic laboratories and prosthetic activities, sponsored by the VA Rehabilitation Engineering Education Program (REEP), September 18-20, 1978, at Palo Alto, California, with actual fabrication demonstration. A training conference is being planned for maxillofacial prosthetic specialists

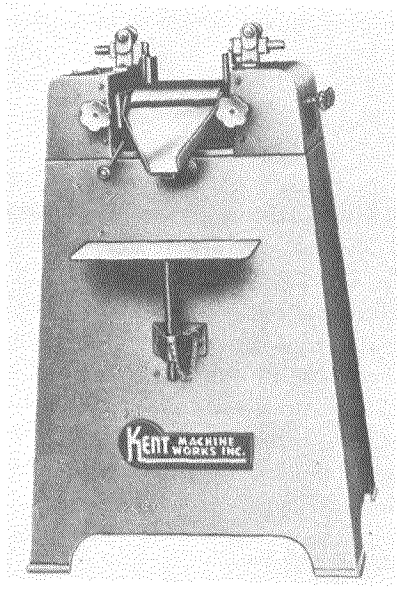


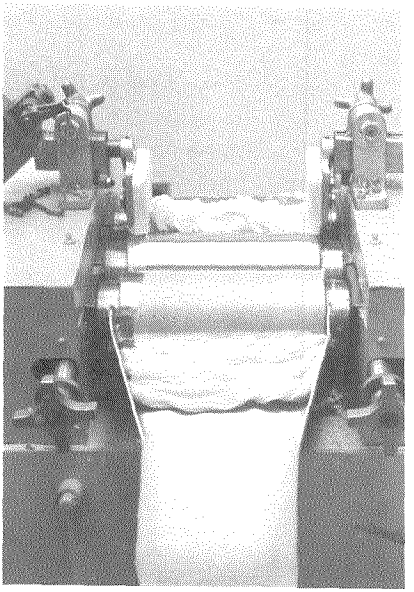

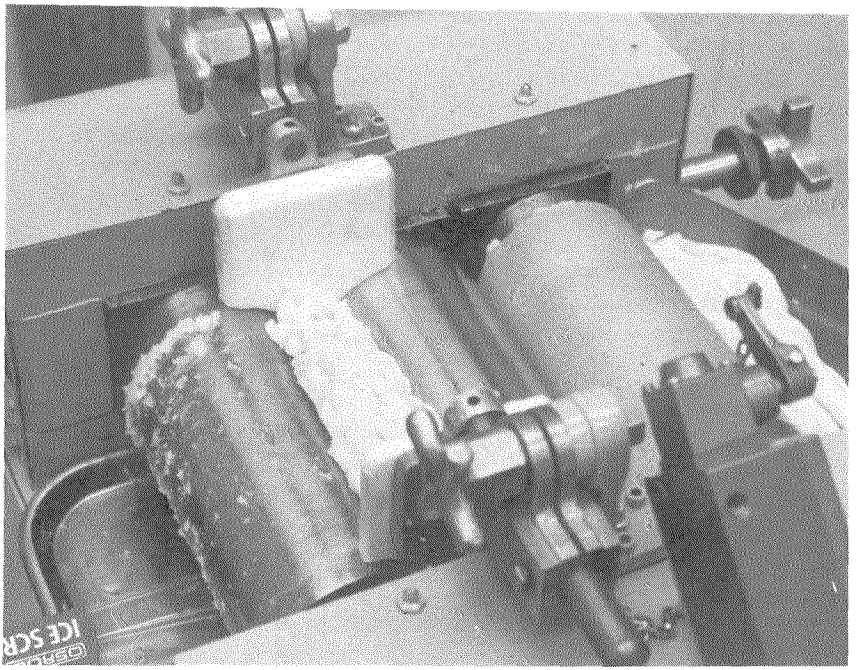

FIGURE 41.—From production to field evaluation, including VA-wide availability of PDM siloxane for orofacial reconstructions: a. three-roll, high speed mill for production of PDM siloxane stocks, b. side view of milling and blending with discharge end, c. top view of milling and blending of prepolymer, oligomer and pigments. After packaging, the PDM siloxane is sent out for field (end-use) evaluation.

and clinicians this April-May under the sponsorship of the VA Northeast Regional Medical Education Center (REMEC). This conference will include actual molding and cosmetic matching of PDM siloxane and will provide all necessary materials.

## VI Production

During the period of this report, three production campaigns for a total of 34 one-pound lots of PDM siloxane (80/20) were made at the plant of Charles Ross and Son, Hauppauge, Long Island, New York, manufacturer of the three-roll mill capable of blending the 80/20 elastomer/oligomer stock with the added pigments, at a production rate of up to 24 one-pound lots per 8-hour operating day. Each one-pound lot provides for 20 to 25 average maxillofacial prostheses. No firm figures on the VA needs are at hand; an assumed need for 1000 single reconstructions annually (an average of 50 prostheses each for 20 likely centers) would amount to barely 20 to 25 kg (44 to 50 lb) or just about 2 days of operation. Therefore, the production facilities of this project can readily accomodate a possible nationwide estimate of 5000 reconstructions annually. For the latter reason the field (end-use) evaluation program, by providing specification grade PDM siloxane, is an appropriate means for stabilizing and standardizing a safe and effective biomaterial for extensive orofacial reconstructions, and in due course shifting from dependence on current expedient proprietary prosthesis materials of unproven safety and effectiveness in terms of standard end-use tests.

## Acknowledgment

The participation of Dr. Irene Mildan on the preparation and exacting maintenance of the tissue culture technique and standardization for the HED tissue toxicity system is gratefully acknowledged, as is the invaluable assistance and guidance by Dr. Mary D. Nadijcka for expertise in cell development and genetic implications. Not the least is the acknowledgment of the interest and cooperative assistance of Dr. W. Hayman Behringer, Chief, E.N.T. Section, and Dr. James S. Reilly, E.N.T. Section, Veterans Administration Medical Center, Wilmington, Delaware, who are providing the orofacial tissues for the HED toxicity testing system.

### References

1. Lontz, John F. and James W. Schweiger: Maxillofacial Restorative Biomaterials and Techniques. Bull. Prosth. Res., BPR 10-28:182-188; Fall 1977, see especially p. 182.
2. Lontz, John F. and James W. Schweiger: Maxillofacial Restorative Biomaterials and Techniques. Bull. Prosth. Res., BPR 10-29:145-155; Spring 1978, see especially pp. 147-153.

3. Sweeny, W.T. et al.: Evaluation of Improved Maxillofacial Prosthetic Materials, J. Prosth. Dent., 27:297-305 (1972).
4. Gonzalez, Juan B.: Polyurethane Elastomers for Facial Prosthetics. J. Prosth. Dent., 39:179-187, 1978. (The disclosure on the use of organic tin catalysts therein is not in conformity with the findings on toxicity in Reference (5).)
5. Guess, Wallace L. and Sue Haberman: Toxicity Profiles of Vinyl and Polyolefinic Plastics and Their Additives. J. Biomed. Mat. Res., 2:213-335, 1968.
6. Hueper, W.C.: Experimental Production of Cancer by Means of Implanted Polyurethane. Amer. J. Clin. Path., 34:334-337, 1960. This article discloses the carcinogenicity of several physical forms of polyurethane plastic emerging remotely from the implant sites (subcutaneously in the neck area, and intraperitoneally), of female rats in such vital areas as the liver, lymph nodes, and uterus. This finding has been and is widely known among those in the polymer industry, yet certain proprietary ventures continue to proffer polyurethane for prosthetic devices and for adhesives, ignoring the published warning by Hueper.
7. Horton, Linda: Medical Devices. Strengthening Consumer Protection. FDA Consumer, Oct. 1976, HEW Publication No. (FDA) 77-4005.
8. Lontz, John F. and James W. Schweiger: Maxillofacial Restorative Materials and Techniques. Bull. Prosth. Res., BPR 10-24:241-243; Fall 1875.
9. Lontz, John F. and James W. Schweiger: Maxillofacial Restorative Materials and Techniques. Bull. Prosth. Res., BPR 10-27:161-165; Spring 1977.
10. Federal Register, Department of Health, Education and Welfare, FDA, Medical Devices, Procedure for Investigational Device Exemptions, Part III, May 12, 1978.
11. Wolff, Sheldon and Paul Perry: Differential Giemsa Staining of Sister Chromatids and the Study of Sister Chromatid Exchanges without Autoradiography. Chromosoma (Berl.) 48:341-353, 1974; also Perry, Paul and Sheldon Wolff, New Giemsa Method for Differential Staining of Sister Chromatids. Nature, 251:156-158, Sept. 13, 1974.
12. Ames, Bruce N., Joyce McCann and Edith Yamasaki: Methods for Detecting Carcinogens and Mutagens with Salmonella/Microsome Mutagenicity Test. Mutations Res., 31:347-364, 1975.
13. Robeson, Lloyd M., Winfred J. Saunders, Sui-Wu Chow, and Markus Matzner: Development of Improved Materials for Extraoral Maxillofacial Prosthesis. Contract No. N01-DE-42436. Comprehensive Final Technical Report, June 1, 1974 to November 30, 1976. National Institute of Dental Research, National Institutes of Health.

## Permanently Attached Artificial Limbs

**Southwest Research Institute**
**8500 Culebra Road**
**San Antonio, Texas 78284**
**C. William Hall, M.D. and William H. Mallow**

### Development of Adhesive Systems for Prosthetic Implant Coatings[a]

Implant materials that traverse the skin must have a compatible surface for developing a skin interface that will promote healing and

[a]The work reported here has been primarily conducted by William H. Mallow and is a summary of ongoing research in this area. (Mr. Mallow has also written an 8-page "Overview of Adhesive Bonding" which discusses the molecular characteristics of adhesives and explains, in non-mathematical terms, requirements for lasting mechanical bonds. If you would like a free copy, write to BPR's Editor.)

prevent microbial invasion. One such example has been the requirement for a percutaneous load-bearing skeletal extension (PLSE). For load-bearing qualities, stainless steel meets the requirements, but it is not suitable for interfacing with the skin and subcutaneous tissues. Bonding a suitable skin interfacing material to the stainless steel element requires the use of an adhesive. Most adhesives eventually degrade when placed in the hostile environment of living tissues. The problems encountered with adhesives used under these conditions are discussed.

## Adhesive Bonding

Adhesive technology encompasses the parameters of the combined fields of rheology, surface energetics, surface chemistry, surface tension, solid and liquid kinetics, colloid chemistry, physics, mechanics, thermodynamics, electrochemistry, electrostatics, and various principles of polymer science. When biological systems are involved and the bonding involves the environment of living organisms, adhesive science acquires a more complex set of parameters. Every physiological, microbial, pathological and biochemical function inherent in living organisms adds to the hostilities and resulting stresses imposed upon the adhesive system. Numerous papers and texts have been devoted to the basic and applied science of adhesion and provide the background of the study represented in this report (1,2,3,4,5).

An analysis of the criteria for designing a prosthetic implant device has been previously published, and these criteria were used by the engineers for selecting materials to meet the physical, mechanical, chemical, and biochemical requirements (6,7). The design of the mechanical device, the selection of interfacing materials and adhesives, and the final construction of the prototype were developed jointly by the engineers, chemists, and surgeons. The major contributions of the chemists to this effort were the selection and application of polymers and coatings and the adhesive bonding of these components to the prosthetic hardware.

## Criteria for Selection and Testing of Adhesives Systems for Prosthetic Coatings

A survey of various adhesives, surface treatments, and primers was conducted, with special emphasis on the criteria of biological and physiological compatibility with the candidate adhesive system. The development and survival of the adhesive bond in vivo provided the basis for final selection. This limited the candidates to the families of silicones, expoxies, and acrylic adhesive systems, which are well known in the biological and physiological domain.

The single most contributory factor in the loss or destruction of the

substrate, or between any surface and substrate material to be used in biological implants, was identified as an attack by water or water vapor. Second in importance was the attack of electrolyte solutions and water vapor in a synergistic phenomenon, followed by the vulnerability to attack by microorganisms or enzymes within the host animal. Conventional silicone adhesives (primed or otherwise); many of the commercially available epoxies, polyesters, acrylics, and elastomeric cements; and cyanoacrylate adhesive systems were ineffective when subjected to humid aging, autoclaving, and boiling-water tests. Humid aging was the most severe and aggressive environment toward adhesive/adherend integrity and approximated in vivo factors in an accelerated mode of testing.

Three standards of quality acceptance were selected to assure a stable bond in the animal implant material studies:

1. humid aging resistance to 180 deg F for 2 wk at 100 percent relative humidity;
2. resistance to 250 deg F/100 percent relative humidity autoclaving for 4 hr; and
3. biological and physiological compatibility for application in animal studies.

Of the many materials tested, only one met all three of these quality standards.

A two-component epoxy adhesive manufactured by Thermal-Chem of Elk Village, Illinois, designated "14R"®, was the most effective in laboratory screening and ultimately in the in vivo studies. This adhesive comprised a polyamide-cured epoxy of a specific composition proprietary to the manufacturer which, unlike many other epoxies evaluated, was not weakened, debonded, or otherwise deteriorated by exposure to steam, autoclaving conditions, or boiling water. The substrate upon which this adhesive was applied was prepared by either sandblasting or knurling to provide a greater surface area to optimize both intimate contact and good integration of the adhesive, adherend, and the coating. The surface was then scrupulously cleaned, first with water and detergent and then rinsed with deionized water, acetone, and chlorinated solvent. Finally, the assembly was baked until dry. Exposure to autoclave conditions for 30 min effected the desired sterilization and identified a poorly bonded assembly if such existed.

Many authors suggest that desorption of the adhesive by water occurs at the adherend surface, with all the available bonding sites becoming occupied by water. Probably the most conclusive work illustrating bond desorption by water is in the field of resin/glass laminates (8,9,10,11). Desorption by water can occur by either of two methods:

1. The adhesive can absorb the water, whereupon the water permeates the adhesive at the interface where desorption takes place.

2. The water may diffuse along the adhesive/adherend interface.

Laird (12) has shown that diffusion of water along the glass/resin interface of an epoxy-bonded E glass takes place 450 times faster than permeation through the resin. Workers in the field are beginning to admit the possibility of adhesive displacement by water, yet maintaining the improbability of bond failure in adhesion. Other evidence supporting the desorption theory is the heat of immersion data by Harkins (14) and co-workers who show that water develops a greater work of adhesion for polar solids such as titania and silica than do liquids such as propanol, acetone, and benzene (13,14,15). The work of adhesion of water for polar solids is greater by a factor of three or more than for any other liquid evaluated. More recent work by Eley and Radham (16) makes the same point clearer with more polar liquids and with epoxies as well. Heat of immersion shows that water is adsorbed both physically and chemically, depending upon the temperatures at which the substrate is degassed. Liquids such as hexane are adsorbed physically and with relatively low heats of immersion. When adsorption studies are made with combinations of liquids, the desorbing effect of water is the dominant factor. As little as 0.02 percent of water and benzene will give almost the same heat of immersion for polar solids as for pure water. Hackerman (17) and others have shown more recently that water displaces hydrocarbons from aluminum oxide surfaces both rapidly and quantitatively.

When one considers that water develops a greater work of adhesion on polar solids than any of the liquids or polymers evaluated heretofore, the implications in terms of desorption capability of water for adhesives in biological systems cannot be overemphasized. White (18) indicated that once a liquid other than water is adsorbed onto the solid, it can be preferentially desorbed by water or by any liquid that develops a greater work of adhesion to that particular solid. The phenomena of adsorption and preferential displacement are widely applied in gas and liquid chromatography and are not restricted to low-molecular-weight materials. Separation of polymers with molecular weights as high as 2 million is described in this technology.

An important factor in designing a stable bond to metal surfaces is the match of the mechanical properties of the adhesive to the substrate. Stresses induced by mismatches in the modulus of elasticity and in thermal expansivity have resulted in bond failure, especially when the device experienced mechanical stresses induced by a mismatch of the physical properties. Major differences in densities between the substrate and the adhesive result in shock wave reflections at the interface, producing discontinuity.

Interface imperfection in the form of trapped air bubbles creates sites for localized stress concentrations that augment interface desorb-

large, use of an adhesive such as nitro-rubber phenolic, which can relieve stresses because of its very low modulus, is ideal, both as a strong fastener and as a stress relief interlayer. The extent of the bonding action is determined almost entirely by the initial wetting and spreading and adsorbing action of the adhesive. Once this has achieved equilibrium with the adherend, the subsequent hardening action of the adhesive, whether by solvent evaporation, cooling, or chemical polymerization, can only detract from adhesion by introducing stresses within the bond area.

Critics of this reasoning will immediately point out that strength of the bond at the assembly increases with time as the drying, cooling, and polymerization process continues; however, this merely reflects the increase in strength of the adhesive material and has no significance in terms of attraction forces at the interfaces. These introduced stresses include those caused by shrinkage and differences in coefficient of thermal expansion, representing the primary factors responsible for bond failure in adhesion.

Stresses at any bond interface can also be created by swelling during the solvent adsorption. The adhesive, being normally organic or semiorganic in nature, and very polar, can be sensitive to aqueous and organic environment. Any adsorption may result in swelling, and the adherend, especially if it is metallic or ceramic, will not swell. The point of discontinuity will be the plane of greatest stress concentration. If stress concentrations are accompanied by aqueous desorption of a physically adsorbed adhesive, failure in adhesion is inevitable, and finally, corrosion of the adherend or the substrate, caused by the adhesive or by the environment, is a possibility that must be considered. In selecting the metal or the material for the substrate, its compatibility with the host environment, as well as with the adhesive, must be seriously considered. It is not always possible to predict corrosion versus adhesive/adherend combinations by short-term exposure tests as recommended by ASTM. Hence, the corrosion must be considered as a possibility, even in well prepared bonds. However, it can be argued that corrosion of the substrate by the adhesive and/or the environment occurs only after the adhesive has been desorbed; thus, the corrosion takes place at the vacated active sites.

Pursuant to this theory, in preparing our velour coatings, the substrate was carefully cleaned, freed of any corrosive materials, and the adhesive applied as thoroughly and continuously as possible to preclude trapping of air, moisture or other agents conductive to localized corrosion. In addition, the bond was effected as continuously as possible from extremity to extremity to again preclude infusion of corrosive agents, air, and moisture between the bond and the substrate adherend.

There are few environments as hostile and severe toward im-

planted adhesives and other materials as is the living organism. A combination of moderately high temperature, high moisture, moisture gradients, electrolyte solutions, electrolyte gradients, enzymes, microbes, chemicals of infinite variety, electrochemical and physical chemical reactions, and endless hosts of physical and biological parameters constantly attack implanted materials.

Materials selected for use as coatings between mechanical implants and tissue fall in the general classification of biomaterials. When an implant material is recognized as foreign, the host tissue either digests the foreign material, isolates it with a fibrous membrane, or eliminates it from the body. If the implant material is ignored, it is probably not identified by the host as foreign material.

Adhesive strength between implant material and surrounding tissue may be measured by using a torque meter. Tissue culture techniques in vitro can be used to determine cell adhesion ability by measuring contact angles of the cells adhering to the surface of the material. When a plastic whose molecular structure is known to be polar or wettable is used for the tissue culture substrate, a close relationship is formed between the molecular structure of the plastic and the cell tissue. Cells exhibit a very high contact angle or very low adhesion toward polymers such as silicones, polyethylenes, and polystyrenes because of the alkyl radical or the hydrocarbon constituents that are repelling toward cell tissue, resulting in poor cell adhesion. On the other hand, acetylglucose amine and cellulose, which have many hydrophilic radicals, show a high degree of wettability and have small contact angles with the cell, resulting in strong cell adhesion. The surfaces of hydrophilic plastics and ceramics are polarized and are considered to develop hydrogen bonds or van der Waals forces between the hydrophilic surface and extracellular substances which are granular proteins and gluco-proteins. The binding energy, although strong, probably occurs in a part of the whole surface of a cell, and a structural recomposition is probably taking place constantly at the molecular level, even in the cell unit membrane. This assumption has been confirmed by electron microscopy by Kawahara, Fisher and Flaxman (19,20,21).

The greatest adhesion is achieved between cell tissue and ceramics or oxides. Most ceramics, metals, and metal oxides are very hard, brittle materials, void of any flexibility or ductility. This characteristic may be adequate in an implant in which all components are static and fixed, requiring no mobility, vibration or translational energy about the implant, but most implants experience a considerable amount of torque, tension, compression, and other types of loading. Implants exposed to or borne by a rigid tissue-to-substrate interface usually result in a shear of the ingrowth from the implanted material. To circumvent this, many experimenters have developed flexible and

porous coating materials to interface mechanical load-bearing devices with tissue. Such materials as nylon, Dacron® velour, and Proplast® are among these. Although the adhesion to the fluorocarbon polymer materials is less than to nylon, Dacron, or the oxides of metals and minerals, the bond is much more durable and resistant to mechanical loading than the adhesive bond between metal oxides or mineral oxides with tissue.

In this program, it was expedient to concentrate on those biomaterials that combine reasonable strength, biological stability, and a measure of resilience and mobility to withstand the mechanical and dynamic forces imposed upon the interface of the prosthetic implant and the animal host. Although nylon velour is recognized to be less than ideal, the duration of the experiments with the host animal were designed to permit evaluation of the basic concept and parameters of the type of material being employed before any significant biological or physiological degradation or rejection occurred.

## Materials and Methods

Through the course of this program, several materials were implemented and evaluated as mechanical substrates for biological implants. These materials included stainless steels, Vitallium, graphite-epoxy composites, and fiberglass-polyester composites. Prosthetic implant prototypes of each material were coated with one of the following candidate materials:

1. Porous acrylic plastic
2. Biocarbon material
3. Porous alumina
4. Bioglass
5. Nylon velour
6. Proplast®

The acrylic plastic consisted of a modified styrene, high-impact acrylic polymer blended with monomer in proper proportions. The monomer/polymer mixture was then blended with various quantities of ascorbic acid, granulated to a specific particle size. The slurry was cast into specially prepared metal or plastic implant substrate surfaces and allowed to cure to maximum rigidity. Subsequently, the plastic coated implant was machined to the exact proportion and configuration for surgical application. In the process of machining the surface away from the cured acrylic, the granules of ascorbic acid were exposed to the surface. By immersion in warm water, the exposed granules of ascorbic acid were extracted, dissolved and removed, leaving preselected cavities or pores of such diameter and depth ($\sim 100\ \mu$) as to facilitate ingrowth of tissue and bone. The polymer/steel or polymer/plastic interface was prepared in the following manner:

For use on stainless steel, the surface of the metal was first

sandblasted with a very fine-grit quartz powder and then rinsed with deionized water containing a small amount of anionic detergent, flushed again with deionized water, rinsed with acetone and then with methylene chloride. It was then oven-dried for a few moments before coating with the acrylic. The coatings were applied as soon after drying as was practicable, and the coating material was worked into the surface by a gentle abrading or rubbing of the polymer slurry onto the surface to assure good contact and wetting.

Both Biocarbon and Bioglass are applied under intense heat. Carbon is usually applied by a sintering process whereas Bioglass is usually applied by flame spray.

Each of the above discussed coating materials represents a class of rigid solids. In contrast to this approach, several non-rigid, fibrous and porous products have been evaluated as coatings to provide the proper interface between the mechanical and the biological entities. These materials were adhesively applied to the mechanical substrates following a similar type of preconditioning to the metal as was described for the application of the acrylic plastic. The surface of the metal was abraded by sandblasting and scrupulously cleaned and dried, followed by the application of one of the velours with the aid of an epoxy adhesive. The most effective epoxy adhesive found for this particular application was supplied by Thermal-Chem of Illinois.

To further assist in obtaining a dependable and stable bond between the velour and the metal substrate, especially in areas where the metal surface was very small, and where the loads and the stresses applied to that surface were substantially greater than in the larger surface areas, the substrate was not only sandblasted, but also a medium knurling was applied to the surface. Adhesive was lightly applied to the metal substrate and to the velour. The velour was subsequently pressed into the surface and held in place until the polymers were firmly set; then the assembly was warmed for approximately 24 hr to assure a complete cross-linking of the epoxy. The velour-coated assembly was then subjected to boiling water for 2 hr, to saturated steam in an autoclave environment for 4 hr, and to a humid aging test (180 deg F thermal blanket and 100 percent relative humidity for 7 and 14 days). Specimens exposed for 14 days did as well as those exposed for 7 days. There was no apparent indication of debonding or attack on the epoxy/substrate interface. To identify the efficiency of the bond, peel strength tests were conducted on a steel adherend, onto which strips of nylon velour were adhesively applied. Efforts to peel the velour from the metal substrate resulted in tensile failure of the velour; that is, the velour actually failed and tore internally before the adhesive bond could be broken. This test was also repeated after 2 weeks of humid aging at 180 deg F, 100 percent relative humidity, with identical results.

Proplast® was applied by its developer in Houston and consisted of a Teflon-coated synthetic material (Teflon and carbon fiber) that was applied to metal substrates by a heat and pressure process, utilizing the thermal-plastic nature of Teflon.

## Conclusion

Several Proplast® and velour-coated prostheses have endured for as long as 12 mo in vivo with no adverse effects. Failures were observed in the metal substrate, resulting from unexpected loads induced by the animal or through bacterial invasion at the transition of internal/external members. These two were often mechanically initiated by accidents in the fenced area. There has been no observed biological attack or deterioration of the implanted surfaces during 6 to 12 mo implants.

Due to the design of the intramedullary portion of the skeletal device, its weakness is divulged under loads of tension. Two long term animals (up to 12 mo post implantation) had the prosthesis pull out

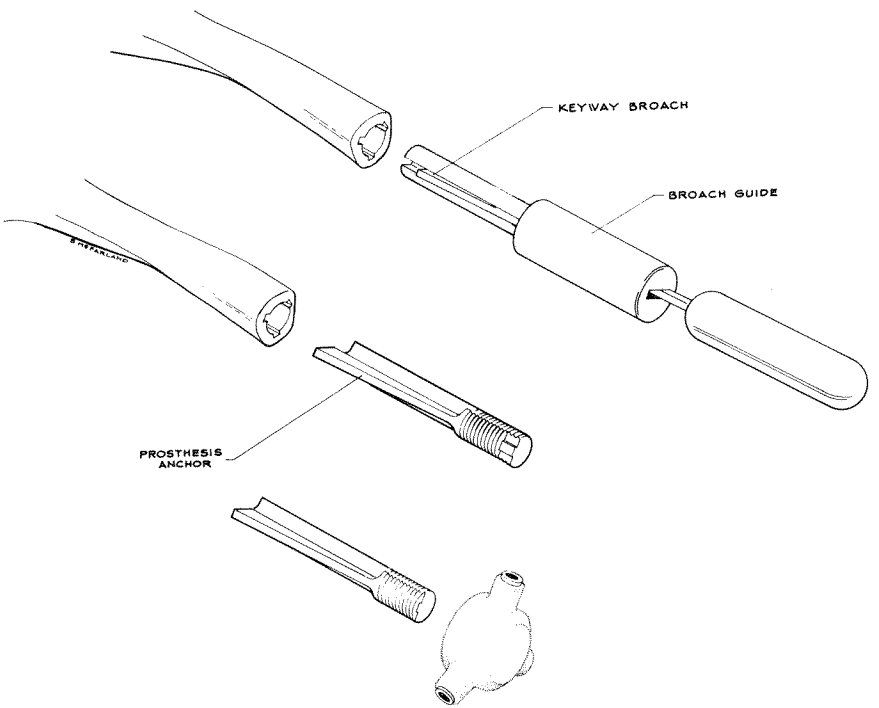


FIGURE 42.—Top drawing illustrates tool that will be used to broach a tapered slot in the cortex to receive the two-part intramedullary pin shown in the bottom two illustrations. The two-part pin allows the insertion and locking in place of a tapered keyway that will prevent pullout under tension.

after becoming entangled in a woven wire fence. A prototype has been designed and fabricated which has the proximal portion of the intramedullary portion wider than the distal shank, making pullout under tension impossible without fracturing the cortex (Fig. 42).

Failure of the adhesion of the Proplast® has not been observed. An occasional failure of the velour bond has occurred on that portion of the lug which is exterior.

## References


1. Skeist, I.: Handbook of Adhesives. Reinholdt, 1962.
2. Cagle, C.V.: Handbook of Adhesive Bonding. McGraw-Hill, 1973.
3. Katz, I. and C.V. Cagle: Adhesive Material. Foster Publishing Company, 1971.
4. McGuire, P.E.: Adhesive Raw Material Handbook. Padrie Publishing, 1964.
5. Baier, R.E., E.G. Shafin, and W.A. Zisman: Adhesion: Mechanisms That Assist or Impede It. Science, 162:1360, 1968.
6. Hall, C.W., P.A. Cox, and W.A. Mallow: Skeletal Extension Development: Criteria for Future Designs. Bull. Prosth. Res., BPR 10-25, 69-96, Spring, 1976.
7. Hall, C.W.: Percutaneous Load-bearing Skeletal Extensions (PLSE). *In* David Williams (ed.), Biocompatibility of Orthopaedic Implants, 2, CRC Press, Cleveland, Ohio.
8. Laird, J.A. and F.W. Nelson: The Effect of Glass Surface Chemistry on Glass Epoxy Systems. Soc. Plastics Engrs. Trans., April, 1964.
9. Erickson, P.W., A. Volpe, and E.R. Cooper: Effects of Glass Surfaces on Laminating Resins. Modern Plastics, Aug., 1969.
10. Outwater, J. and D. Kellogg: A Simple Experiment to Show the Origin of Water Influencing the Debonding of Resin Against Glass. Report for Contract V-3219(01)(X). Sept., 1969.
11. Zisman, W.A.: Surface Chemistry of Glass Reinforced Plastics. NBL Report 6083, Symposium on Glass-Resin Interface of the Society of Plastics Industry, Inc. 19th Annual Exhibit and Conference. Chicago, Illinois. Feb. 6, 1964.
12. Laird, J.A.: Glass Surface Chemistry for Glass Fiber Reinforced Plastics. Final Report. Navy Contract W-0679-C(FBM). June, 1963.
13. Boyd, G.E. and H.K. Livingston: Adsorption and the Energy Changes at Crystalline Solid Surfaces. J. Am. Chem. Soc., 64:2383-2388, 1942.
14. Loeser, E.H., W.D. Harkins, and S.B. Twiss: Adhesion of Liquids to Solids. Molecular Interaction Between Metal Oxides and Adsorped Vapors. J. Phys. Chem., 57:251-254, 1953.
15. Basford, P.R., W.D. Harkins, and S.B. Twiss: Effect of Temperature on the Adsorption of N-Decane on Iron. J. Phys. Chem., 58:307-312, 1954.
16. Eley, D.D. and R. Radham: The Influence of Metal Oxide Films on the Wetting of Metal Surfaces by Adhesives. Symposium on Adhesion—Fundamentals and Practice. Maclaren & Sons, Ltd., London. 1969.
17. Wase, W.H. and H.J. Hocherman: A Microcalorimetric Study of Liquid Displacement Phenomena. J. Phys. Chem., 69:314, 1965.
18. White, M.L.: The Protection and Control of Organic Contaminants on Surfaces. Marcel Dekker, Inc. New York, 1969.
19. Kamahara, H.: Biological Test of Dental and Surgical Materials by Means of Tissue Culture. Second Proceedings of the Inter-Academy of Oral Pathology. 79, 1965.
20. Fisher, J.W. and T.W. Cooper: Electron Microscopic Studies of the Microvilli of HeLa Cells. J. Cell. Biol., 34(2):569, 1967.
21. Flaxman, B.A., M.A. Jutzner, and E.J. Banscott: Ultrastructure of Cell Attach-