Bull. Prosth. Res., BPR 10-32, Fall 1979, pages 135–175.

SOME ASPECTS OF HIGH PERFORMANCE INDOOR/OUTDOOR WHEELCHAIRS[a]

Gordon Stout, B.S.M.E.
Assistant Development Engineer

Biomechanics Laboratory
University of California, Berkeley
2162 Etcheverry Hall
Berkeley, California 94720

INTRODUCTION

The last 15 years have seen electric wheelchairs evolve from slow, indoor-only devices to vehicles that are also useful for outdoor trips of several miles. But while wheelchairs with good outdoor performance are now commercially available, the evolution of the indoor/outdoor wheelchair is by no means complete. There remain important issues of safety, reliability, durability and performance which require systematic consideration of the wheelchair as a vehicle.

This paper presents some of the thinking and experience of the wheelchair design project at the Biomechanics Laboratory at the University of California at Berkeley. We have been strongly influenced by the active and independent disabled community in Berkeley, and by the example of the high-performance MSE and National wheelchairs which have dramatically increased mobility for many people here. (Fig. 1 and 2.) These influences have focused our attention on high performance indoor/outdoor wheelchairs—vehicles designed for the maximum usefulness outdoors consistent with unimpaired indoor performance.

Besides the National and MSE wheelchairs, a number of other wheelchair design projects are pursuing this approach. The Veterans Administration Prosthetics Center (VAPC) has been actively interested in higher performance wheelchairs, and has designed a number of indoor/outdoor wheelchairs, among them one with an automatic variable-speed transmission (1,2,3,4). Mobility Engineering and Development (MED) has a wheelchair with spring suspension and excellent outdoor performance, plus vertical height adjustment de-

[a] This research is supported by the Veterans Administration, Rehabilitative Engineering Research and Development Service, Washington, D.C.

FIGURE 1. — The MSE is a conversion unit for a conventional wheelchair. It has ¼-horsepower, 1200-rpm motors with friction drive onto the rear tires. The chairs typically are capable of 7 mi/hr on the level. (MSE Corp., Mountain View, CA).

signed principally for compatability with their highly developed van systems (Fig. 3 and reference 5). The Center for Independent Living (CIL) in Berkeley has designed a prototype wheelchair with many good features in addition to enhanced outdoor performance. Some years ago Everest and Jennings, Inc. (E&J) developed a prototype high performance indoor/outdoor wheelchair with a spring suspended seat, but they have not produced it commercially. The Swedish Permobil wheelchairs are designed for good outdoor performance, though at some cost in indoor maneuverability. Our own PC2 and SSPU wheelchairs (Fig. 4 and 5, and reference 6) are high-performance chairs with spring suspension and, in the case of the PC2, variable seat height and reclining features. In addition, a number of other wheelchairs fall between the performance level of

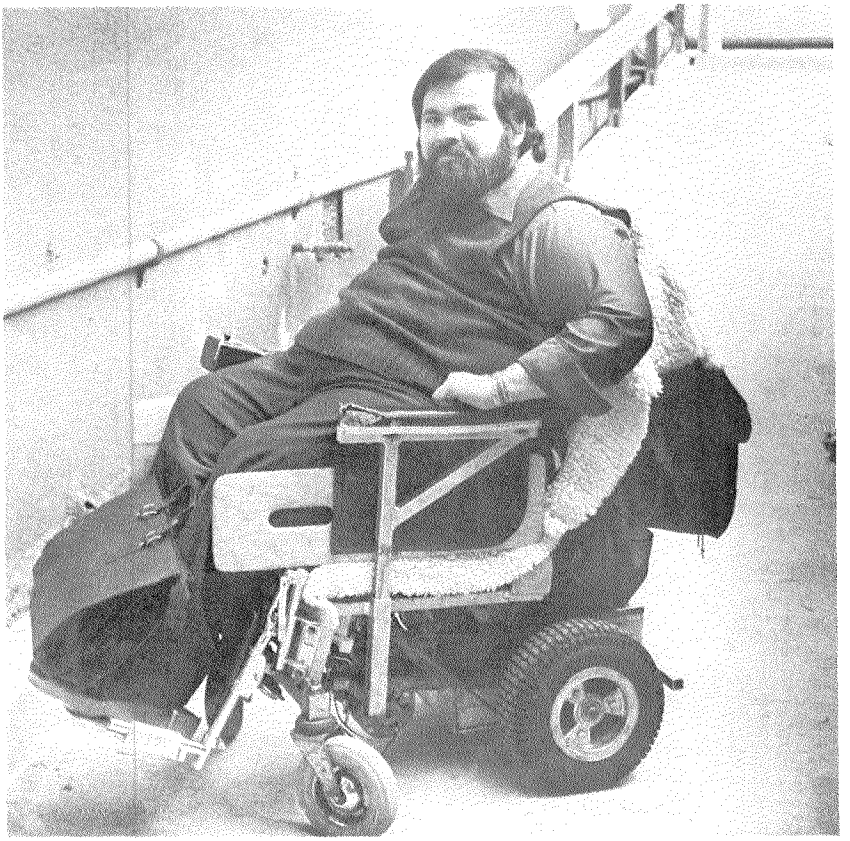

FIGURE 2.—The National Wheelchair has a rugged aluminum frame, ¼-horsepower, 1200-rpm motors, a chain drive, and a 7 mi/hr top speed. The chair also has electric brakes. (National Wheelchair, Redwood City, CA.)

these chairs and that of the 4.75 mi/hr Everest and Jennings 32, which currently has the largest share of the electric wheelchair market.

Other approaches to the problem of wheelchair mobility may of course be more desirable, depending on the specifics of a person's situation. There are several power carts such as the Compass, E&J Mark 20, and Stevens Motor Chair, which offer excellent outdoor performance (for people with enough arm strength for tiller steering) but have rather restricted indoor maneuverability. On the other hand, there are small, portable, low-performance chairs, notably the ABEC and E&J 3N chairs, which offer excellent indoor performance and compensate for their poor outdoor performance by being relatively easily folded for transportation in a car.

A number of people have worked on wheelchair/automobile sys-

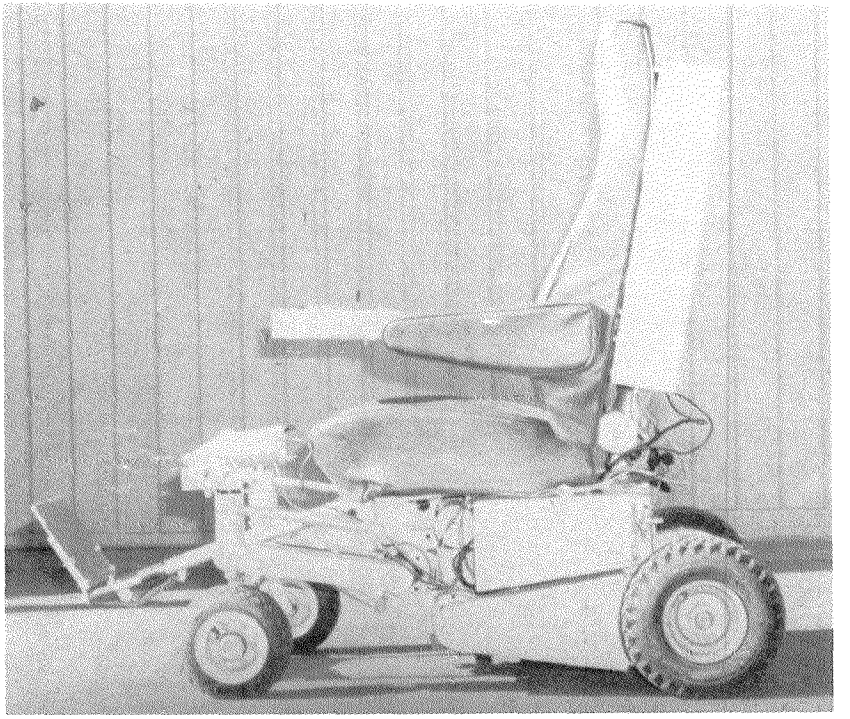

FIGURE 3. — The prototype Mobility Engineering and Development (MED) Van-Compatible Wheelchair has adjustable height, a reclining backrest, four-wheel suspension and electric brakes. One version has power steering and ½-horsepower, 3600-rpm motors geared for an 8 mi/hr top speed. (Mobility Engineering and Development, Van Nuys, CA.)

tems. Our own project began this way (7), and the University of Michigan Rehabilitation Engineering Center (REC) is working on a small, lowerable wheelchair which can be driven into a subcompact automobile (8). The VAPC is currently evaluating the Handicar TVE, a small electric automobile designed for wheelchair compatability (9). Many modified vans are available which can accommodate low- or high-performance wheelchairs in either passenger or driving locations.

Finally, accessible public transit can be very important to mobility.

Our focus here is upon high performance indoor/outdoor wheelchairs. The material in this paper was presented in somewhat different form at the Wheelchair II workshop held in Miami in December 1978, and will be published in the report of that workshop. Our intent is to present experience and stimulate thinking on a wide range of issues, and this has often led us to offer opinions and conjectures

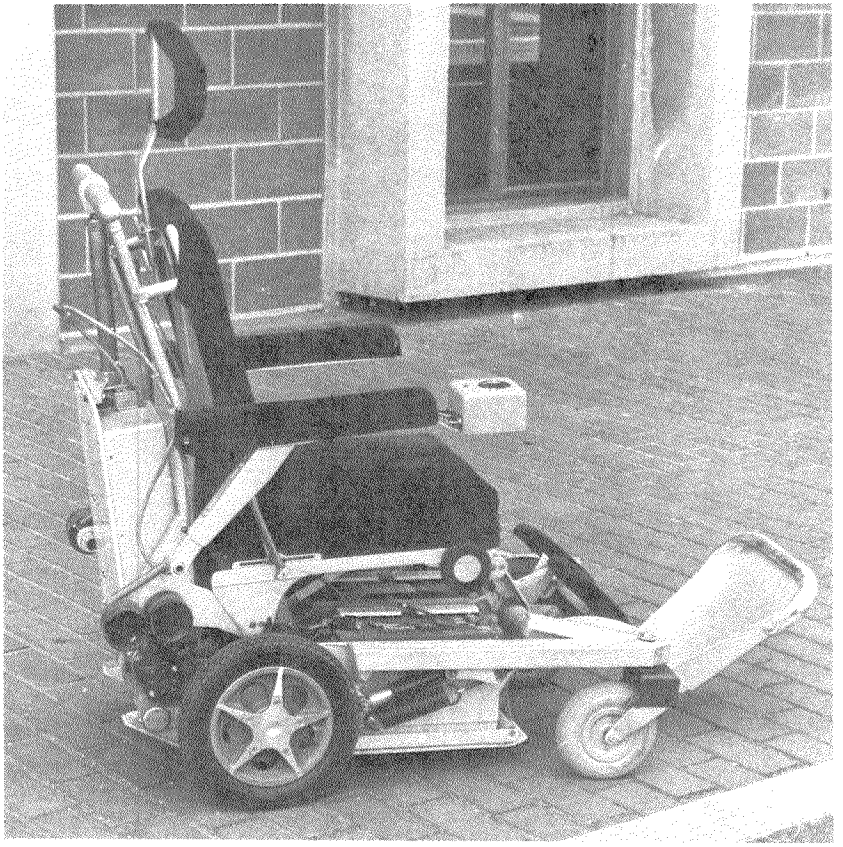

FIGURE 4.—The prototype PC2 wheelchair has an adjustable seat height, articulated footrest, reclining backrest, curb climber, four-wheel spring suspension, electric brakes, and ¼-horsepower, 1200-rpm motors with single-stage helical gearboxes giving a 7 mi/hr top speed. Two Group 27, 105-ampere-hour batteries give a 20-mile range. (U.C. Biomechanics Lab., Berkeley, CA.)

where we have no rigorous answers. We hope that this paper, read in that light, may make some contribution to the continuing evolution of the indoor/outdoor wheelchair.

PERFORMANCE GOALS

Maximum Speed on Level Ground

How fast should a wheelchair be able to go? A common answer is that wheelchairs should not go faster than normal walking speed, since they are often operated among pedestrians. Indeed, safety de-

FIGURE 5.—The prototype Spring Suspension Powering Unit (SSPU) is a conversion unit for a conventional wheelchair. It provides four-wheel spring suspension, electric brakes, and ¼-horsepower, 1200-rpm motors with chain drives giving a 7 mi/hr top speed. Two Group 27, 105-ampere-hour batteries give a 25 mile range. (U.C. Biomechanics Lab, Berkeley, CA.)

mands moderate wheelchair speeds indoors and on crowded sidewalks to avoid injury to the chair's rider or to pedestrians. As with automobiles, however, safety does not require that wheelchairs be mechanically incapable of speeds greater than those suitable for congested situations.

The benefits of wheelchairs with increased outdoor performance are probably most evident in a campus or fairly compact urban area where a person's normal activities are within a radius of a few miles. For many of the short trips common in such situations, the 7 mi/hr (11 km/hr) wheelchairs now becoming common are often more convenient than a van, and much more satisfactory than wheelchairs capa-

ble of only half this speed. With improved speed, a wheelchair can approximate the role of a bicycle as a short-range, fair weather means of transportation which avoids parking problems.

We see five major types of safety issues which will arise as wheelchair speed increases:

1. Many of the safety problems of slower wheelchairs are accentuated for higher performance chairs.
2. Wheelchair speeds or accelerations may be too great for the control capabilities, trunk stability, or other requirements of specific people. Smoothness of the chair's ride and control system can help considerably here, as can good seating. Careful judgment in the selection and operation of a wheelchair is inevitably necessary, however.
3. There are speeds above which operation on sidewalks is unsafe even in uncrowded conditions.
4. For use on the street, a wheelchair has the same vulnerability as a bicycle, but is somewhat less visible and maneuverable.
5. The height of a wheelchair's center of gravity in relation to its small wheelbase places an inherent limit on safe performance levels.

These safety issues are not yet resolved. The 7 mi/hr (11 km/hr) chairs clearly can be safe, and refined handling characteristics, stability and ride may allow safe increases in performance. A major limitation on speed at present is the usual push-pull steering system [b], which becomes jerky at higher speeds due to the action of the reversing relays. [c] Better push-pull controllers, or power steering, might allow speeds of 10 mi/hr (16 km/hr) or so before the high center of gravity would become the limiting factor. A variable-height wheelchair capable of lowering its center of gravity can have better stability, which may allow a further increase in speed.

High performance chairs need a switch to limit speed for indoor use to about 3.5 mi/hr (5.6 km/hr).

Speed on a Grade

Wheelchairs should be able to climb up hills and steep ramps without slowing down excessively, to avoid spending a lot of time climbing

[b] Push-pull steering refers to steering effected by slowing down one drive wheel and/or speeding up the other. Typically, separate motors drive each rear wheel, with full-turning caster wheels in front.

[c] With existing controllers, when the chair is moving forward at speed and the joystick is pulled back to slow down or steer, a nonproportional two step braking action occurs: first, when the joystick is in neutral, braking resistors are switched across the motor, and second, as the joystick passes neutral, a diode is switched across the motor. This produces a jerky response which becomes worse as the chair's speed increases. A solid-state controller could eliminate this problem by pulsing the braking to apply it gradually.

hills and also for reasons of efficiency. For wheelchairs with permanent-magnet motors and fixed-ratio drive trains, motor efficiency decreases about linearly as steeper slopes slow the motors towards the point where they stall. (See later discussion of motor efficiency.)

As a rule of thumb, a wheelchair should maintain at least 70 percent of its level ground speed on a 10 percent grade. This is about 5 mi/hr (8 km/hr) for a chair that goes 7 mi/hr (11 km/hr) on level ground.

Maximum attainable speed going down a grade is an important safety consideration. Fortunately, the wheelchair's motors can be used to limit maximum speed downhill, and this feature is commonly incorporated into wheelchair controllers. (See discussion of controllers.)

Stall Thrust and Stall Grade

Ample driving force at low speeds is necessary to negotiate steep ramps, curbs and rough ground. A good, simply measured index of driving force is the stall thrust, the force the chair can exert against a fixed object at full power, divided by the chair's laden weight. The SSPU wheelchair has a stall thrust of about 38 percent of laden chair weight on the high speed range (17 percent on the low speed, indoor maneuvering range) which enables it to back over 3½-in. (9-cm) curbs (a little roughly) and negotiate uneven ground fairly well. Ralf Hotchkiss reports a stall thrust of 58 percent of laden chair weight as necessary to negotiate rough ground in a manual chair, and indeed, there are obstacles which the SSPU could surmount if it had greater stall thrust. Higher stall thrust levels would, however, require careful attention to rearward tipover stability and control of motor torque through refined controller design.

A second measure of low-speed torque is the stall grade, which is the grade (horizontal distance divided into vertical rise) of the slope just steep enough to cause the chair to stall. The stall grade is related to the more easily measured stall thrust, and can be derived from it [d]. The SSPU has a stall grade of 41 percent (17 percent on the low speed range).

Overall Efficiency

Each of the components which translate the energy from a wheelchair's batteries into drive effort at the wheels causes some energy loss. The components of a drive system, or the system as a whole, can be characterized by their energy efficiency, or energy output divided

---

[d] stall grade = tan (arcsin (stall thrust))

by energy input. The challenge is to design the drive system—motors, drive train, controller, wiring, and so on — for maximum efficiency consistent with reasonable cost, weight, strength, complexity and reliability.

For a rough idea of the importance of efficiency, consider a wheelchair with 108 lb (49 kg) of batteries or 26 percent of the 408 lb (185 kg) laden chair weight. An 11 percent increase in overall efficiency would decrease the necessary battery weight (and total wheelchair weight, if no weight penalty were paid for the efficiency increase), by about 14 lb (6 kg) (assuming that the required battery weight decreases proportionately with both efficiency and gross wheelchair weight). This is about the weight difference between a pair of Group 27 and Group 24 batteries (the next smaller size). This represents a cost savings of about $15.00 each time the batteries are replaced, or about $150.00 over a 5-year chair life if the batteries are replaced every 6 months.

These weight and cost savings must of course be compared to the costs of whatever changes are made to produce the 11 percent increase in efficiency. If the more efficient system is, for example, less reliable, and can expect to have an average of two extra breakdowns at $50.00 each during a 5-year chair life, the net financial gain is reduced to $50.00 and the frustration and hazard of the breakdowns probably would more than wipe out the remaining savings. If, on the other hand, the more efficient system has comparable reliability but costs $100 more, the savings in battery cost and wheelchair weight would be very attractive.

Efficiency varies greatly under different operating conditions, and a wheelchair with high efficiency on level ground may be inefficient on hills, or vice versa. In order to predict or measure efficiency in normal operation, it is necessary to establish patterns of use which define how much time the wheelchair spends at different combinations of speeds, accelerations and grades. A project at the University of Virginia REC (10) is establishing some representative use patterns, and also is developing some of the precision instrumentation necessary for making efficiency measurements. Realistic information about the efficiency of existing systems will be very helpful in establishing goals for new designs.

Range

Fast chairs encourage more driving, and therefore require battery capacity for greater range. We feel that 15 miles (24 km) (over the type of terrain actually encountered) is a minimum range, with space available for larger batteries to extend the range to 20 or 25 miles.

Two Group 27, 105-ampere-hour batteries (about 14 watt-hours per kg of laden chair weight) give about a 25-mile (40-km) range to the SSPU wheelchair, which has a relatively efficient chain drive. Range, like efficiency, should be measured under agreed-upon representative use patterns in order to produce comparable measurements.

STABILITY, HANDLING AND MANEUVERABILITY

Especially as wheelchair performance improves, it is important to pay careful attention to questions of stability, handling, and maneuverability. Six critical situations can be isolated: rearward tipover, forward tipover, skidding on a downhill slope, sideways tipover, handling in turns and on side slopes, and low-speed turning.

1. *Rearward tipover,* due to forward acceleration of the chair, or simple tipping on a slope. Stability against rearward tipping can be expressed by the percent grade at which the chair will be on the verge of tipping (the steeper the tipover grade, the more stable the chair) and also by the vertical rise in the center of gravity (CG) during rearward tipover on a horizontal surface (Fig. 6 and 7). It is important to compare the stall grade to the tipover grade; if the stall grade is greater than the tipover grade the chair will be able to drive onto a slope steep enough to tip it over. In addition, if the stall grade is greater than the rear tipover grade, the wheelchair will be capable of a "wheelie" (lifting the front wheels off the ground by excessive forward acceleration) on level ground. In fact, if the chair rolls backwards, the available thrust increases, and a wheelie is possible even on a grade substantially lower than the stall grade unless the controller limits maximum motor torque. (Control of maximum motor torque is one among several reasons for designing current limiting into controllers.) The rise of CG as a criterion of stability is a measure of how much energy it takes to tip the chair over on level ground if, for example, the chair backs up into a low obstacle or does a self-powered rearward tipover on level ground due to excessive forward acceleration.

Factors which increase stability against rearward tipover are: lower or more forward CG location, reduced maximum drive force, and more-rearward axle location. CG rise in level ground tipover also increases with larger wheel diameter but the tipover grade does not.

2. *Forward tipover,* due to hitting a curb, etc., or to simple tipping on a slope. Again, stability can be expressed by the minimum grade

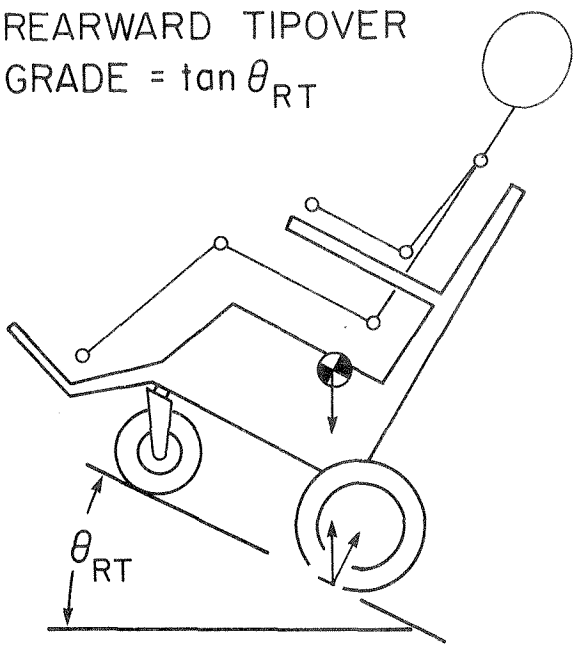

FIGURE 6. — The rearward tipover grade is just steep enough to cause the wheelchair to be (statically) on the verge of tipping backwards.

which will cause forward tipping, or by the vertical rise in the center of gravity during forward tip-over on level ground. (Fig. 8.) Note that while electric wheelchairs are generally harder to tip forwards than backwards, forward tipover is likely to be more dangerous than rearward tip-over since the wheelchair may land on its occupant.

Factors increasing stability against forward tipover are: lower or more rearward CG location or a more forward front caster location.

3. *Skidding on a downhill slope* because of weight transfer to front caster wheels. Because the typical wheelchair configuration has no front wheel brakes or steering, all control is lost when the rear wheels lose traction. For a given wheelchair, we can calculate the necessary coefficient of friction between tires and ground to prevent skidding on (for example) a 20 percent grade. The higher the required friction, the more prone the chair is to skidding. (This is also a good index of the tendency of the chair to skid one or both rear wheels when applying reverse torque to slow down or steer the chair on level ground.) (Fig. 9.)

Factors reducing the tendency to skid are: a lower or more rearward CG, or a more forward position of the front casters.

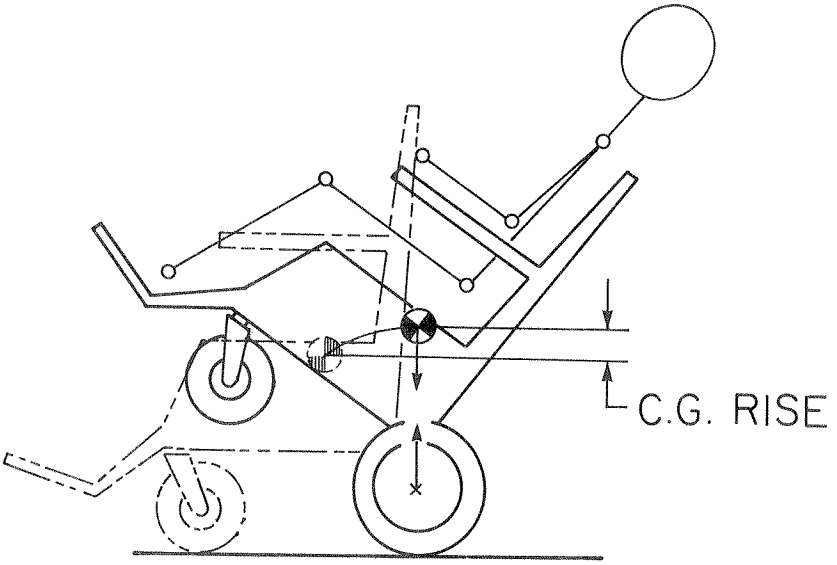

FIGURE 7.—Rearward tipover on level ground due to excessive forward acceleration. Center of gravity (CG) rise is a measure of the energy required to tip the chair backwards to the point of no return. (Chair shown has 12-inch rear wheels.)

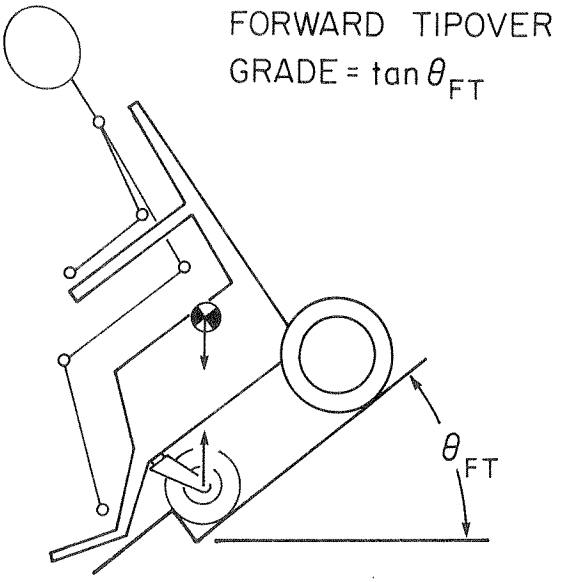

FIGURE 8. — The forward tipover grade is the grade which is just steep enough to cause the wheelchair to be (statically) on the verge of tipping forwards.

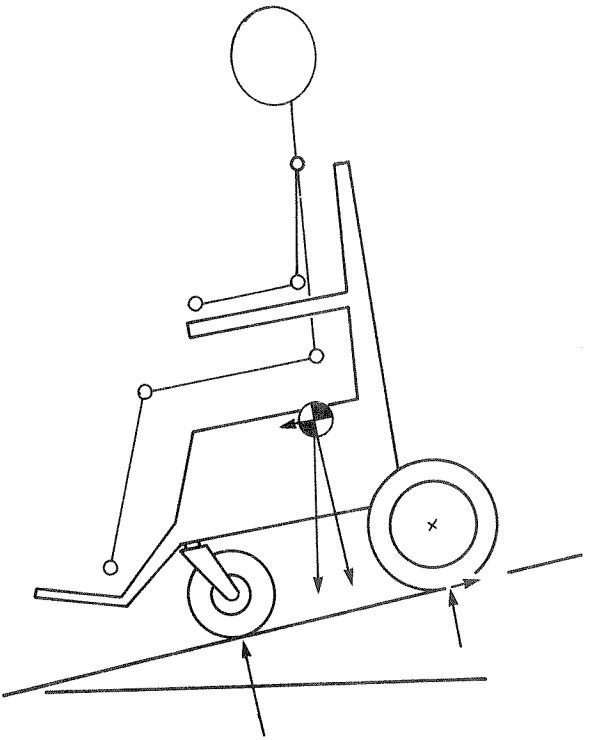

FIGURE 9. — Skidding on a downhill slope is caused by weight transfer to the freewheeling front casters.

4. *Sideways tipover.* Front-caster wheelchairs with normal push-pull steering have an inherent safeguard against sideways tip-over: if a push-pull steered wheelchair with front casters is driven onto a side slope extreme enough to risk tipping it over, the uphill drive wheel unweights completely and skids, and the chair simply points downhill. (See "Handling in turns and on side slopes", which follows.) Chairs with power steering do not have this safeguard, and need careful attention to questions of lateral stability. But collisions, driving crosswise off a curb, or making a sharp turn while moving in reverse can tip any chair over sideways, and the tipover grade as shown in Figure 10 is a good index of lateral stability.

Sideways tipover stability is improved by lowered CG and increased chair width.

Calculation of these indices of stability should take into account the static deflections of spring suspension so that some of the destabilizing effect of the suspension is reflected in the stability measures. Note that while fore-and-aft CG position is a matter of compromise be-

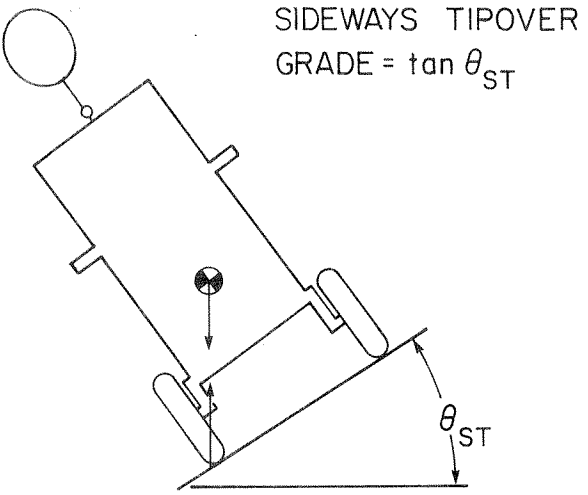

FIGURE 10. — The sideways tipover grade is just steep enough to cause the wheelchair to be (statically) on the verge of tipping sideways.

tween stability measures, in all cases lowering the CG improves stability, which is a strong argument for variable height in high-performance chairs.

5. *Handling in turns and on side slopes:* Front-caster push-pull-steered wheelchairs are inherently understeering vehicles, which means that they tend to straighten out when in a turn. The reason (Fig. 11) is that centrifugal force acts through the chair's center of gravity, which is forward of the rear wheels which resist lateral motion. This creates a moment tending to rotate the chair back to a straight-line path, so it requires a positive drive effort (as in Figure 11) to maintain the chair on a circular path (or on a straight path across a side slope, which is an analogous situation).

Note that if the chair is moving in reverse, the opposite is true: centrifugal force tends to tighten any turn which is initiated. This is why front-caster push-pull wheelchairs are difficult to steer straight when going backwards fast, and can be tipped over sideways in runaway turns when going backwards. (It is also why rear-caster push-pull chairs are unsuitable for anything but low-speed use.)

Three major factors increase handling sensitivity for front-caster push-pull steered wheelchairs: short distance between the rear axle and the chair's center of gravity, which is the moment arm of the 'straightening-out' forces; width between the rear tires, which is the moment arm of the turning effort exerted by the rear wheels; and

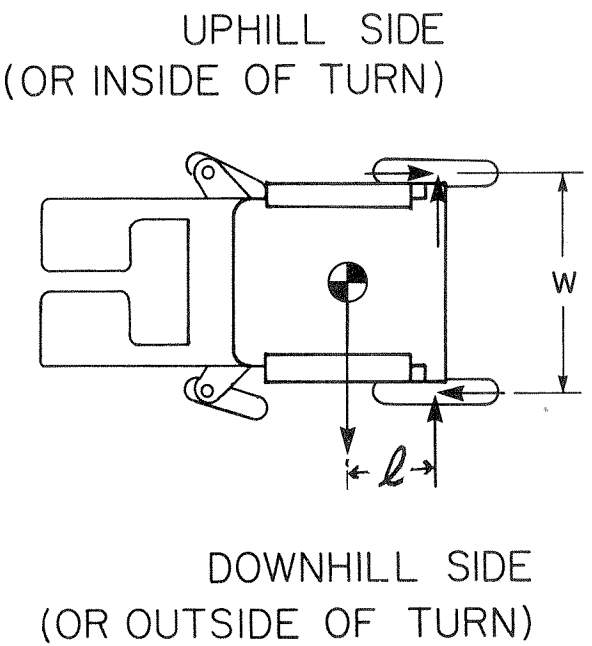

FIGURE 11.—Top view of a wheelchair in a turn (or on a side slope), showing forces tending to straighten out the turn (or point the chair down the slope).

stall thrust, a measure of the turning effort relative to the chair's weight. These factors can be conveniently combined:

$$\text{Handling Sensitivity Index} = T\frac{w}{l}$$

where: T=stall thrust, % of laden chair weight
w=width between rear tire centerlines
l=distance CG is forward of rear axles.

Handling sensitivity is important, not only for responsiveness and side-slope controllability, but also for decreasing the amount of energy expended in steering the chair. Maintaining a turn on level ground (or side slope driving) requires braking on the inside (or uphill) wheel, an inefficiency which is reduced by good handling sensitivity. The SSPU wheelchair, which is fairly responsive, has a handling sensitivity index of 1.0 (.45 with the high/low switch on low).

Handling sensitivity is improved by increasing stall torque, moving the CG back toward the rear axle or increasing chair width. (These steps are taken to make sports manual wheelchairs more maneuverable.)

6. *Low-speed turning resistance.* When a wheelchair is turned at low speed, the casters have a significant frictional resistance to turning about the caster pivot axis. This creates a lateral force on the caster axis bearings which resists the intended turn. The turning resistance is aggravated by (Fig. 12): a long caster-axis-to-rear-axle wheelbase, which is the moment arm of the resisting force; and weight on the front casters, which increases the resisting force. Stall thrust and wheelchair width counteract turning resistance. An index of low-speed turning resistance is:

$$\text{Caster drag leverage} = \frac{LC}{Tw}$$

where: L=distance from rear axle to caster pivot

C=% of laden chair weight on front casters

T=stall thrust, % of laden chair weight

w=width between rear tire centerlines

The actual resistance of the caster to turning about the caster pivot axis when the wheel is not rolling is the other major part of the low-speed resistance to maneuvering. A caster turning friction coefficient can be defined as the lateral force necessary to move the front of

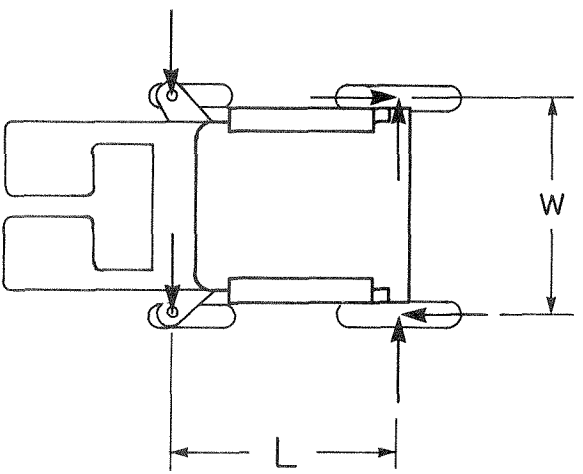

FIGURE 12.—Resistance to turning at low speeds is aggravated by the lateral resistance of the casters and the rear-wheel-to-caster-pivot moment arm, and helped by the wheelchair width moment arm.

the chair sideways (when the wheels are not rolling) divided by the weight carried by the casters. This can be measured directly by setting the casters straight ahead, removing brakes and drives as necessary so the rear wheels can turn freely, and measuring the peak force it takes to push the front of the chair sideways ½ in. or so (pushing sideways on the caster barrel). The coefficient of friction between the tire and ground is clearly crucial. One approach would be to use a dry, sidewalk-rough concrete surface for one measurement, and for another put the casters on relatively frictionless turntables. This would allow an assessment of the proportion of the total turning resistance in the caster bearings and that in the tire footprint. (This is also relevant to the question of caster shimmy discussed later.)

The product of the caster drag leverage and the caster turning friction coefficient gives a measure of total resistance to turning at slow speeds.

MOTORS [e]

The compactness, efficiency, lightness and low cost of the permanent-magnet DC motor make it the prime candidate for wheelchair use, notwithstanding some interesting controller concepts which involve other kinds of motors. Figure 13 shows the form of the characteristic curves of a permanent-magnet DC motor operating at fixed voltage. The conditions of operation represented by the curves can be visualized as follows: batteries are connected across the motor terminals (which is about the same as pushing the joystick to the extreme of its travel) and a brake mounted on the motor shaft provides variable output torque (which is about the same as putting the wheelchair on a slope of variable steepness). The motor speed drops linearly from its maximum at zero output torque to zero speed at stall torque; from this speed-torque curve we can derive the curve of output power versus torque, which has a parabolic form reaching its maximum at half of stall torque. The motor's continuous-duty rated power is considerably less than the peak power, and while short periods of operation above rated power are permissible, extended periods will cause damage from overheating.

The motor draws current in direct proportion to the torque it produces; limiting current is an effective way of limiting torque. The motor's efficiency curve drops at the extreme low-torque end due to brush and bearing drag, but basically falls linearly with increasing torque, reaching zero at stall torque. If the brush and bearing drag

[e] Reference 11 has a good discussion of permanent-magnet DC motors.

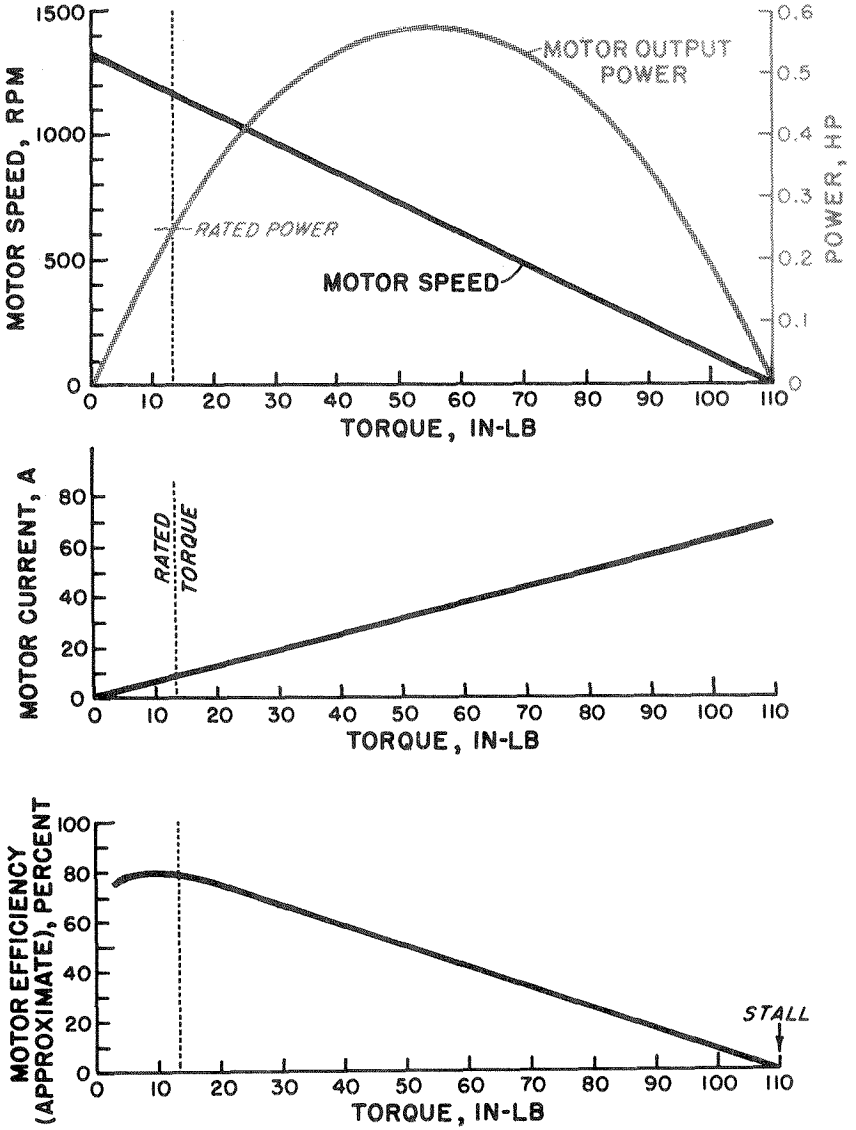

FIGURE 13. — DC permanent-magnet motor characteristics.

are ignored, efficiency falls linearly from some maximum value (less than 100 percent) at zero torque to zero at stall torque. (Note: the efficiency curves shown in Figure 13 through 16 are based on manufacturers' data and should not be relied on for precision.)

If we choose a drive ratio and laden weight for the chair we can translate motor speed in revolutions-per-minute into wheelchair

speed, and motor torque into percent grades [f]. Thus Figure 14 shows a plot of how fast the chair will go on different slopes at full power, from full speed on the level to zero speed at a maximum grade which corresponds to the stall grade discussed earlier.

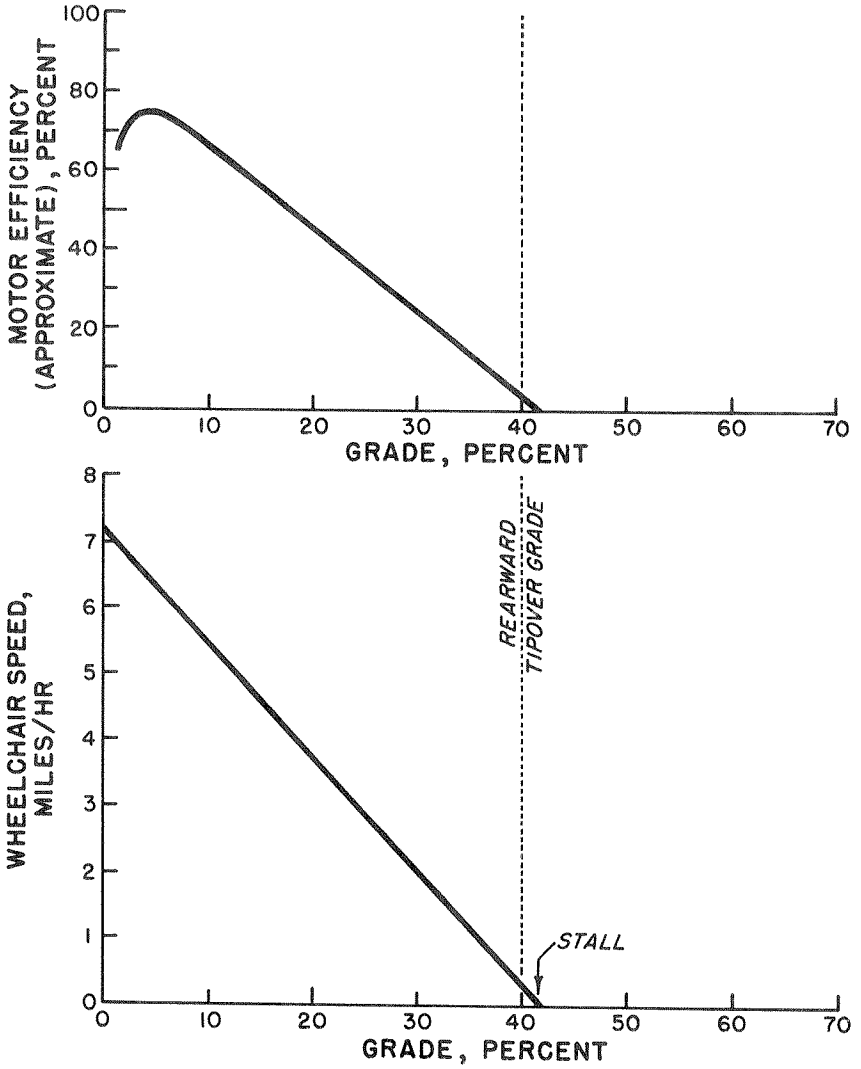

FIGURE 14. — Wheelchair performance.

[f] If precision is desired, drive train efficiency, voltage drops and rolling resistance should also be considered.

Note again that the motor efficiency drops roughly linearly from its maximum towards zero as the grade increases to the stall grade.

Figure 15 shows the curves for the same chair and motors but with a higher gear reduction (more revolutions of the motor per revolution of the rear wheel). The wheelchair's speed is less on all but the steepest grades, but the chair will climb a much steeper grade [g]. The

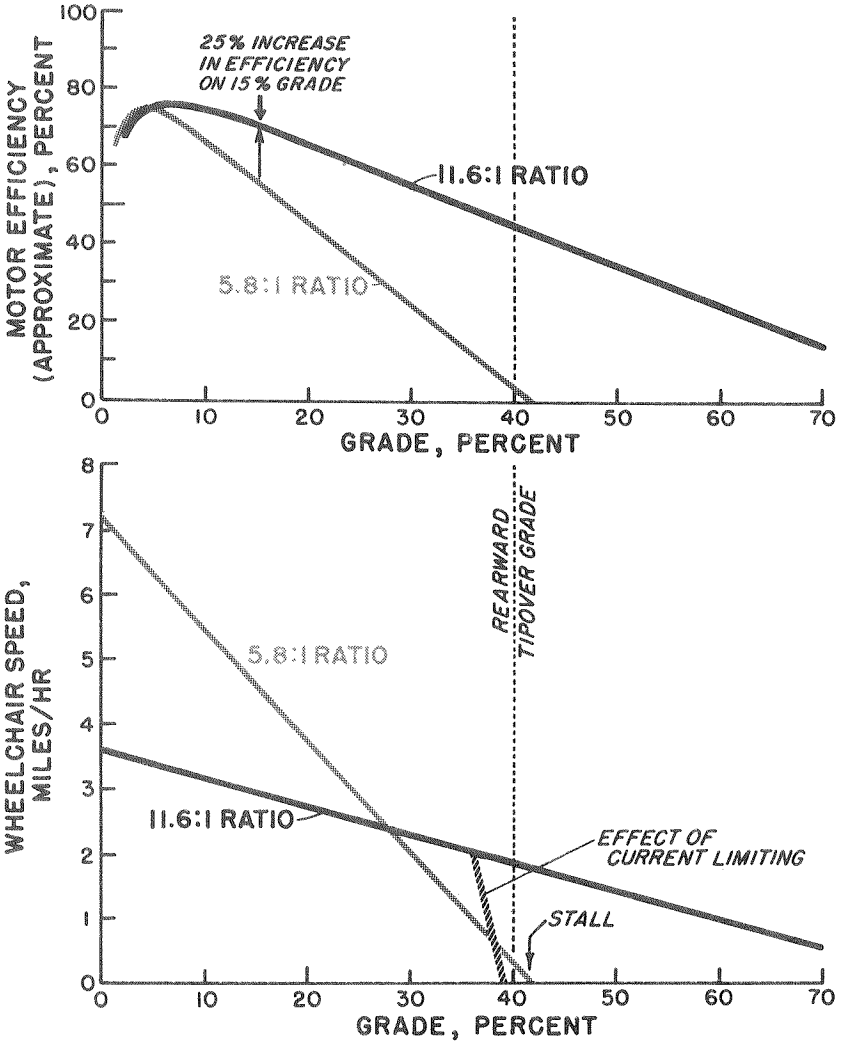

FIGURE 15. — The effect of drive ratio.

[g] In fact, current limiting would be necessary to prevent wheelies. As shown in Figure 15, current limiting can keep the stall grade lower than the rearward tipover grade by restricting motor torque.

efficiency curve slopes downwards more gently with increased grade, so on steep grades the motor efficiency is much higher than before. For example, on a 15 percent grade, efficiency is 25 percent higher than with the lower gear reduction. If a variable-speed transmission were used to shift continuously between ratios, we would keep the good level-ground speed of the first case and add the good hill-climbing ability of the second, along with substantially increasing motor efficiency on steep grades. If the transmission is efficient, simple, and inexpensive enough, this may be an excellent solution.

Another approach to the problem is to increase the size of the motors. As shown in Figure 16, this also increases the stall thrust and lessens the downward slope of the efficiency curve in much the same way so that, again, motor efficiency on steep grades is increased. The difference is that the available power is greater, so speed on hills is enhanced relative to the multiple-ratio case. The cost is slightly heavier, bulkier, and more expensive motors [h].

For the MSE, National, PC2 and Spring Suspension Powering Unit (SSPU) chairs which use 1200-rpm, ¼-hp motors (which the curves of Figures 13 through 16 roughly represent) switching to 1200-rpm ½-hp motors would increase cost by about $25, weight by 7 lb (3.2 kg), and each motor's length by 1⅛ in. (2.9 cm). (Table 1.) This is an attractive alternative, but is unusable at present because no controllers are commercially available which have current-limiting to prevent wheelies from excessive motor torque.

TABLE 1. — *Size Comparison of ¼ & ½ hp Motors (1200 rpm)*

		¼ hp	½ hp	Difference
Diameter	(in)	4⅝	4⅝	—
Length	(in)	7¾	8⅞	1⅛
Weight	(lb)	14.0	17.5	3.5

Note: ½ hp motor costs about $12.00 more

Having chosen the motor's horsepower (and ensured that its brushes are adequate to handle the maximum forseeable current) the question remains whether to select a relatively small, high-speed motor with a high-reduction drive train, or a larger, low-speed motor which needs less reduction. The experience in Berkeley has been with the latter option, mainly because of the simple drives it makes possi-

[h] The higher power motors would need either a 48 volt system or a controller with higher current capacity. The higher current option would require heavier motor brushes which would somewhat reduce efficiency on low grades.

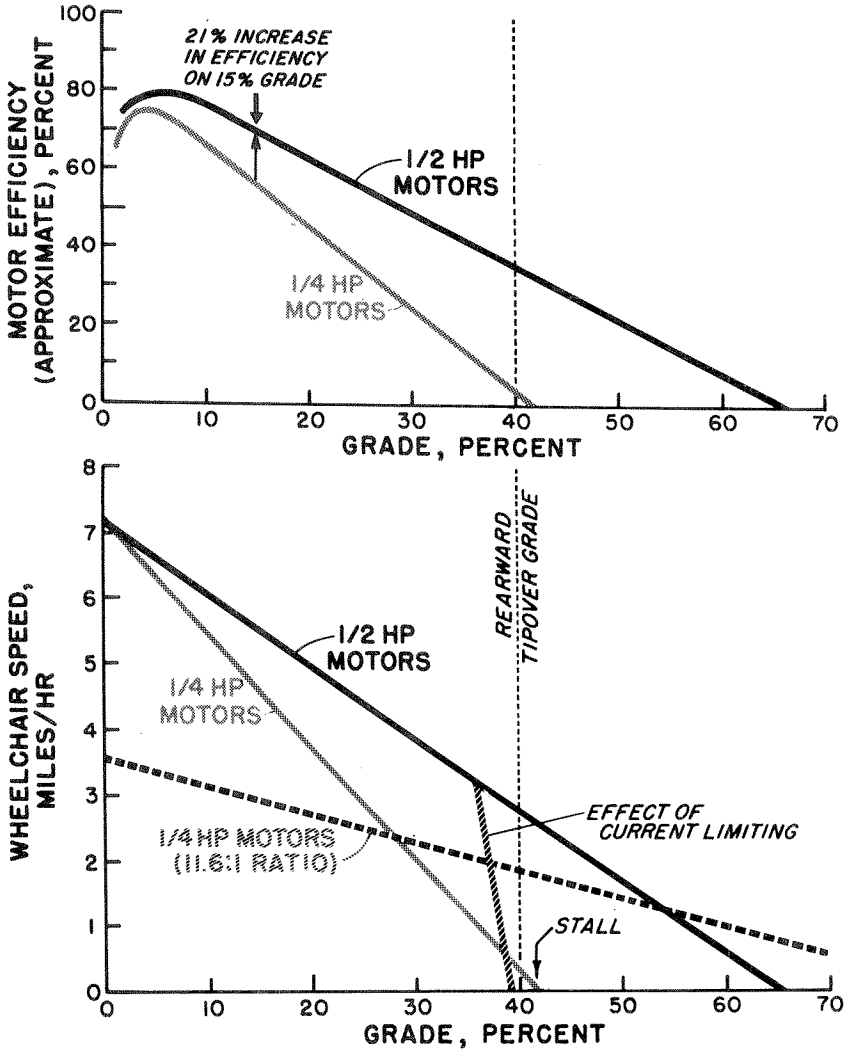

FIGURE 16. — The effect of motor size.

ble. Consider the effect of replacing the 1200-rpm ¼-hp motors with 3600 rpm motors also of ¼ hp, and changing from a 5.8:1 drive ratio to 17.4:1, giving about the same speed/grade characteristics. The major benefit is that each motor is .81 in (2.1 cm) shorter, and a pair of motors is 5 lb (2.3 kg) lighter and costs about $28 less [i].(See table 2.) Whether these weight and space savings are worthwhile depends on a

[i] Alternatively, 3600 rpm motors of ½ hp are about the same size and cost as the 1200-rpm ¼-hp motors, and offer greater capacity and efficiency.

consideration of what penalties are paid in obtaining the higher reduction drive train necessary for the higher speed motors.

TABLE 2. — *Size Comparison of 1200 and 3600 rpm ¼ hp Motors*

		1200 rpm	3600 rpm	Difference
Diameter	(in)	4⅝	4⅝	—
Length	(in)	7¾	6 15/16	13/16
Weight	(lb)	14.0	11.5	2.5

Note: 3600 rpm motor costs about $14.00 less but requires about three times as high a gear ratio

Note: 3600 rpm ½ hp motor is same size, weight and cost as 1200 rpm ¼ hp motor.

DRIVE TRAIN

Table 3 gives some performance and cost characteristics of several of the many possible drive train types. (Among those omitted are planetary, harmonic, Orbi-Drive[j], and variable-speed transmissions.) The intent of the table is to give a rough description of some of the available options, and all of the numbers presented are approximate.

Drive train costs are presented in the table as a percentage of the most expensive type. The cost difference between the more and less expensive systems is large for low volume production, but decreases for greater quantities. Furthermore (as discussed later) initial cost savings may be overshadowed by maintenance costs, which means that the more expensive systems may in fact be economical choices. Enclosed gearboxes can provide excellent durability and low-maintenance operation, and should be seriously considered for any chair likely to be produced in quantity.

The drive train should be designed in conjunction with the motors, wheel size, and chair layout, in order that the cost and efficiency of the overall system can be optimized. High peak drive torques often occur in normal wheelchair use, which must be reflected in adequate strength of drive components.

SPRING SUSPENSION

A number of wheelchairs have spring suspension, and trials of the MED, PC2 and SSPU wheelchairs indicate that this is a very worthwhile feature, especially for a fast chair which is used outdoors. Ride

[j] Available from Compudrive Corp., North Billerica, Mass.

TABLE 3. — *Characteristics of Drive Trains*

	Friction onto Tire	Friction onto Separate Surface	Worm Gearbox with Belt	Enclosed Worm Gearbox	Enclosed Spur Gearbox	Enclosed Helical Gearbox	Single Stage Chain (Silent Chain)	Single Stage Timing Belt
Efficiency	65-80%	70-85%	60-80%	65-90%	90-97%	90-97%	80-95%	75-90%
Noise	Excellent	Excellent	Good/exc.	Good/Exc.	Fair	Good	Fair (Good)	Good
Maintenance (if well designed)	Fair-adjust, replace tires	adjust?	Good-adjust, replace belts	Excellent	Excellent	Excellent	Good-adjust, clean, oil, replace chains	Good-adjust, replace belts
Wet weather performance	can slip	can slip?	belt can slip	Excellent	Excellent	Excellent	Excellent	Excellent
Flat tire drivability	can't be [a] driven	Drivable	Drivable	Drivable	Drivable	Drivable	Drivable	Drivable
Cost (relative to Worm)	15	40	70	100	70	80	40 (80)	40
Compactness	Excellent	Fair	Fair	Fair/good	Fair/Exc.	Fair/Exc.	Fair	Poor
Durability (if well designed)	hard on [a] tires	?	Good	Excellent	Excellent	Excellent	Good	Good
Maximum Reduction per stage	20:1	10:1	200:1	70:1	8:1	8:1	7:1	6:1

[a] The rear tires of MSE wheelchairs are often filled with BykFil, a rubber compound. This eliminates the flat-tire drivability problem, as well as increasing drive efficiency and tire life.

comfort is much improved, driving fatigue is reduced, and good accommodation to rough terrain can be assured. The PC2 and SSPU wheelchairs have independent rear swing-arm suspension, with tension springs and motorcycle steering shock absorbers. The MED chair has front and rear swing-arms and four-wheel independent suspension (utilizing rubber torsion springs) which appears to give an excellent ride. The Newton wheelchair also has rubber torsion springs for its independent rear swing-arm suspension, but the spring rate is rather high for maximum confort.

How soft should the ride be? Spring rate is a good measure of ride firmness, though for comparisons between chairs it is best to consider the weight on the wheel and express the firmness in terms of the natural frequency.[k] The SSPU rear suspension has a spring rate of 57 lb/in (98 N/cm) at each wheel, which with 91 lb on each rear wheel corresponds to an undamped natural frequency of 2.5 cycles/second. The MED chair has a spring rate of 28 lb/in (49 N/cm) for each rear wheel, which with about 100 lb (45 kg) on each rear wheel gives a natural frequency of about 1.6 cycles/second. Five problems may arise when the ride is softened much beyond these values:

1. Suspension travel must be increased to avoid bottoming out with the softer springs, and long travel may be impractical because, for example, the footrests strike the ground. A good measure of the adequacy of suspension travel is the maximum height from which the chair can be dropped without bottoming out. For the SSPU wheelchair this is 2.5 in (6 cm) which means that the chair can be driven off a 2.5 in curb without bottoming out. This seems adequate to prevent bottoming in most situations.

2. Static lateral, rearward, and forward tipover stability may be compromised by center of gravity shifting due to large suspension travels. Stability measures should reflect this fact (see discussion of stability above).

3. Because of its high center of gravity, a wheelchair has a large moment of inertia in pitch (and in roll). Care must be taken that deflections, especially in the pitch mode of vibration, do not become excessive.

4. Excessive rear-end squat and front-end dive may result from acceleration and braking, respectively. A similar problem exists with automobiles, where the front end dropping down during braking may tilt the seats forward enough to aggravate the tendency to slide forward. With a rear swing arm suspension it is possible to locate the

[k] Simplifying the problem to a one degree of freedom spring-mass system, $f = \frac{1}{2\pi}\sqrt{\frac{k}{m}}$ where f is the undamped bounce frequency, k is the spring rate at the wheel, and m is the mass carried by the wheel.

swing arm pivot so as to avoid or even reverse squat and dive. Consideration of squat and dive is especially important for softer suspensions. (Fig. 17.)

5. Transferring to and from the chair may be more difficult if the suspension is too soft.

We know of two commercially available front caster forks designed to soften the ride with springs: the Davis (MSE) fork with a swing arm and steel spring, and the National fork with a rubber disc sandwiched between two plates. Both absorb horizontal shocks well, but are not good at absorbing vertical shocks. The prototype CIL fork, which has spring steel wire reaching down from the caster pivot to the wheel axle, is designed for both vertical and horizontal shocks, and is promising. At the Biomechanics Laboratory we have two new prototype fork designs, one using telescoping action along the caster pivot axis, the other using a swing-arm pivoted 3.4 in. (8.6 cm) in front of the wheel axle. Both forks greatly improve the smoothness of the ride, and we are refining the swing-arm version.

A significant reason for the popularity of the Davis and National

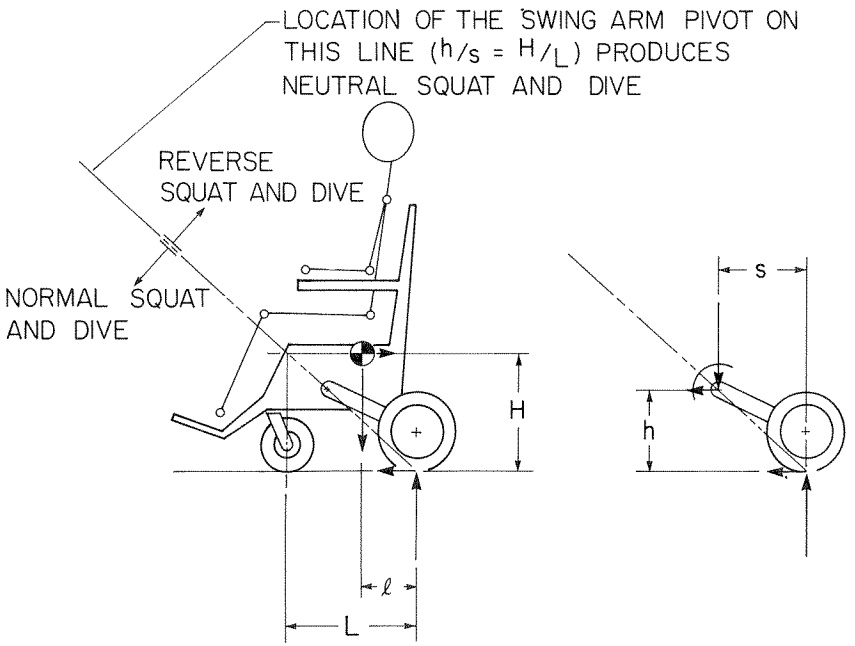

FIGURE 17.—Squat and dive during acceleration and braking can be eliminated by swing-arm geometry which balances weight-transfer to the rear wheels against the torque which the driving force exerts on the swingarm.

forks is their ruggedness compared to conventional forks, which are not strong enough for use on wheelchairs which go over 3 mi/hr.

The question arises whether the spring suspension effect can be obtained by using large soft tires instead of the relatively expensive mechanical means discussed above. Reducing tire pressures to lower the spring rates to acceptable levels courts two problems: lower tire pressures increase rolling resistance (and hence power consumption), and bigger tire footprints (though desirable on soft ground) make the chair harder to turn at low speed. It would be worth looking into whether proper tire design might mitigate these problems.

WHEEL SIZE

For usefulness indoors, a wheelchair should be as compact as possible, ideally extending just far enough beyond its occupant's body to take the shock of collisions. Large rear wheels (descended historically from manual wheelchairs) are major obstacles to compactness. With the same wheelbase, substituting 12-in. for 20-in. wheels can shorten a chair by 4-in. without affecting the parameters of stability discussed earlier except for the CG rise in rearward tipover. As shown in Figures 18 and 19, the 20-in. wheel gives a 35 percent greater CG rise than the 12-in. wheel. The rearward tipover grade remains unchanged, however, and experience with the SSPU and National wheelchairs suggests that the reduced CG rise does not seriously decrease stability. The 20-in. wheels also extend above the seat, which means that for wide-seated chairs they increase the chair width beyond what is necessary for maneuverability and lateral tipover stability.

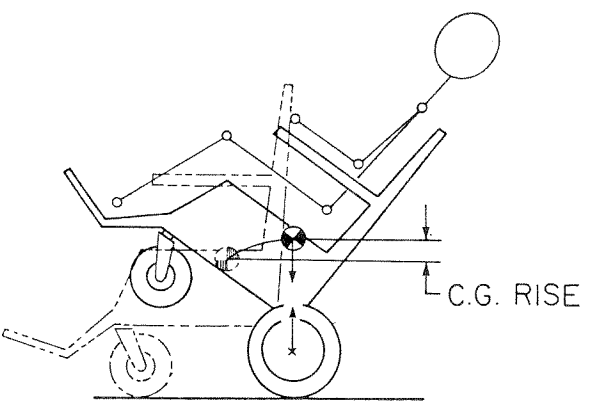

FIGURE 18. — Rearward tipover on level ground with 12-inch wheels.

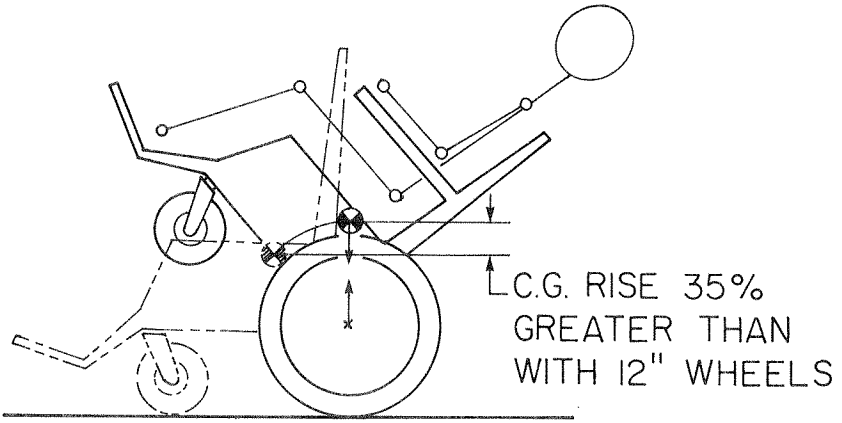

FIGURE 19. — Rearward tipover on level ground with 20-inch wheels.

Beside the compactness advantages, a 12-in. wheel requires only 60 percent of the drive reduction of a 20-in. wheel. This means that with a 1200 rpm motor a single stage chain or spur gear reduction is possible, which can be a great simplification. Furthermore, since the major loads on the wheel bearings are from the moment caused by side loading the wheel, the 12-in. wheel has much lower bearing loads than a 20-in. wheel.

Concern has been expressed that the 12-in. wheels will have problems traversing bumps. This does not appear to be a problem, perhaps because the 8-in. casters are the limiting factor in either case; the SSPU wheelchair can climb up a 3½-in. curb, which is adequate for many purposes. The 12-in. wheels will have a somewhat higher rolling resistance, but this will probably be offset by the increased efficiency of the lower ratio drive.

For a given tread material and thickness, smaller diameter tires can be expected to have a shorter tire life, since they have a smaller circumference on which to carry rubber. While the 20-in. tires are available in a wide variety of profiles and rubber compounds, this will not be true of smaller sizes until they become more widely used. The 16-in. x 1¾-in. tires used on the PRAHN I and CIL chairs use readily available black rubber Schwinn Sting-Ray bicycle tires, which can be made in grey rubber if demand is sufficient. The National and Scott chairs both use 12-in. go-cart tires, which have good availability and ruggedness for both tires and wheels, but are a minimum of 3½-in. wide and hence rather space-consuming. We favor a 12½-in. x 2¼-in. tire, a size used on wheelchairs in Europe, which is available in white rubber as a relatively lightweight scooter tire in the U.S. and also as a heavier duty tire in black and grey rubber in Germany.

BRAKES AND OTHER SAFETY EQUIPMENT

A high-performance wheelchair must have a reliable braking system. The usual method of using resistance braking across the motor is very inexpensive and reasonably effective, but though it provides some degree of protection against electronic failures it is not in itself an adequate fail-safe backup system. Resistance-braking torque varies directly with the speed of the wheelchair, which leads to sharp braking at high speed, and little braking at low speed. This introduces some jerkiness in the controls at high speeds, and also means that auxiliary parking brakes are required.

The Compass, National, Permobil, SSPU and PC2 wheelchairs all have independent brakes, which we feel is a necessity with high-performance wheelchairs. The manual brakes on the Compass (an outdoor chair with manual steering and brakes) are effective, fully proportional brakes, though they require a positive effort to stop the chair.

The National wheelchair has an interesting braking system which applies brakes each time the joystick moves through neutral, performing the double function of "dead man's" brakes (applied when the joystick is released) and slowing down the motors when switching between forward and reverse, which prevents current surges dangerous to the controller. The spring-loaded brakes are activated when power to an electromagnet is interrupted. The application of the brakes while passing through neutral makes the control response very jerky, however, and there is no manual brake disconnect to allow the chair to be pushed with dead batteries.

The Swedish Permobil chair has servoactivated brakes for which the interruption of power applies the brakes. This sounds like an ideal, if bulky and expensive, system, since it combines proportional braking with fail-safe response.

The brakes on the SSPU and PC2 chairs, like those on the National chair, are fixed-torque brakes which are activated by the interruption of power to a solenoid. A pivoted, lightly spring-loaded paddle on top of the joystick box (other locations are possible, even the joystick itself) closes a switch which allows the chair to be driven when the paddle is depressed by the hand holding the joystick. Sufficient overtravel of the paddle prevents small movements of the hand from applying the brakes. Removing the hand from the paddle activates the brakes. Brake torque is adjustable and brakes can be disconnected for manual pushing of the chair. Disadvantages are that jamming of the lightly sprung paddle could prevent activation of the brakes, and that the dog-type brake now being used can accidentally be left en-

gaged while the chair is driven, which can overheat the brakes.

All of the systems just described function as parking and transfer brakes.

Features of a good braking system are:

1. Application of brakes occurs upon interruption of power to brakes.
2. Brakes are controlled by a separate switch, not relying on the controller logic (especially the neutral joystick position detection circuitry).
3. The switch which sets the brakes also interrupts power to the motors. This is necessary because if braking torque is set to appropriate levels for smooth stopping, the motor torque is sufficient to overcome the brakes.
4. The brakes should have a manual disconnect to allow manual pushing of the chair.
5. Ideally, location of the brake switch should be such that removal of control effort activates the brakes. The switch should be carefully designed so that it is easily kept in the driving position.

Reflectors, lights, and horns are also safety equipment now appearing on wheelchairs. Their wider use should be encouraged by manufacturers offering them as standard options. Seatbelts and shoulder harnesses are also increasingly important to safety as wheelchair performance improves.

CASTER SHIMMY

There is an extensive literature on caster shimmy in aircraft applications which deserves some attention (12,13). Some general considerations are:

1. The rotational inertia of the fork and wheel about the caster pivot axis should be kept as low as possible. (This must be done with due regard to strength, of course.) The wheel and tire especially must be kept light.

2. Looseness in the pivot or axle bearings should be minimized.

3. Damping is required, either at the caster pivot or from the rotational friction of the tire footprint on the ground. Viscous damping (with resistance proportional to rotational velocity) is ideal, because the increase in resistance to desired caster turning is minimal. In practice dry friction damping is much easier to obtain, but it decreases slow speed maneuverability. The object is to have sufficient damping to inhibit shimmy at the highest speeds expected; for any amount of damping, a sufficiently high speed will generate shimmy.

The design of a compact, leakproof, reliable caster axis damper

permitting 360 deg rotation is possible and desirable — but so far elusive. Dry-friction damping can be obtained either by a large tire footprint (which invites caster shimmy on slippery surfaces), or by friction in the caster pivot. A method used in the PRAHN I and PC2 wheelchairs is to use Rulon bushings for the caster pivot, along with a ¾-in. dia fork stem to increase turning drag. E&J has a nylon bushing to replace the top caster bearing, which has a similar effect. We had been satisfied with this arrangement until recently, when calculations indicated that the turning drag is unnecessarily high; Ralf Hotchkiss of the Center for Concerned Engineering, Washington, D.C., pointed out that the configuration involves increased turning drag (without a corresponding increase in damping) because the side load on the wheel from turning puts an increased moment on the bushings. A pure thrust washer arrangement does not have this problem, though it is not clear whether it should be at the top caster bearing and spring-loaded for drag, or on the bottom using the weight on the caster for drag. The latter solution is simpler, but may run into problems with coupling between the shimmy and vertical motion, which could reduce (or increase) the damping just when it is most critical. Thorough study of this problem would be useful.

BATTERIES[1]

Batteries designed for starting automobiles have a short life when used in wheelchairs, and batteries designed for deep cycling are slowly becoming more available in a full range of sizes. Still, battery life even for deep cycling batteries is typically short, perhaps 3–9 months for a fairly active person. This is 90 to 270 charge/discharge cycles, which is considerably less than the 500-cycle life expected from such batteries. (Table 4) Since battery replacement costs are substantial, some research attention is needed to establish what the actual life is under realistic conditions, and what can be done to improve it. In particular, while it is clear that excess battery capacity on a chair makes batteries last longer because they are cycled less deeply, this relation needs to be quantified so that rational decisions can be made about how much battery capacity a chair should have.

Battery charging also affects battery life, and information on the effect of different charging cycles is needed for the design of im-

[1] Given the economics of the wheelchair market, the internal combustion engine is the only serious alternative energy source to batteries, and due to the necessity of indoor operation, it would have to be used in an electric/IC hybrid system. Such systems seem to be too bulky and costly for general use. The University of Virginia REC has designed such a system (14).

TABLE 4. — *Characteristics of Engineering Batteries* (15)

	State-of-the-art Pb/acid	Improved Pb/acid (goals)	Improved Ni/Zn (goals)	Improved Ni/Fe (goals)
Specific energy, W•h/kg[a]	35	50	90	60
Volumetric energy density, W•h/l	60	90	150	110
Energy efficiency, %	65	65	65	60
Cycle life	500	1000	750	2000
Cost, $/kW•h	45	45	60	75

[a] Assumes discharge at the 3-h rate.

proved battery chargers. Battery chargers also need some design attention with a view to reducing their bulk, so that they can be carried on a chair. Some work has been done on a charger concept at the Ontario Crippled Children's Center involving a frequency multiplier to reduce the size of the transformer; this seems like a promising approach which should be pursued. There is also a need for a compact but rugged battery terminal connector with an integral plastic cover, to prevent objects from shorting the battery with resultant arcing, which can cause an explosion of the hydrogen gas which may be present. Most wheelchairs have inadequate battery covers, as well as non-weather-resistant wiring in general.

As to improving the batteries themselves, a clear short-term need is to reduce the maintenance required, since many battery failures in actual use are attributable to poor maintenance. Sealed batteries now being used in cars would be excellent for wheelchairs if they could be redesigned for deep cycling capacity. Improvement both in battery sealing and in charging methods could both reduce the generation of hydrogen gas, which as mentioned above can cause dangerous explosions.

There is considerable new research taking place in batteries with a view to improving performance for electric vehicles. Increased energy density and life are hoped for in the next 5 years, though how much and at what increase in cost is uncertain. A study conducted at the Lawrence Livermore Laboratories (15) describes present and expected battery performance, but with the caution that predictions of future battery performance have traditionally been over-optimistic. (See Table 4.) The report estimates that the probability of any of these batteries reaching all of their performance goals within 5 years is less than 50 percent.

What would be the effect of higher energy-density batteries for

wheelchairs? Lightweight folding wheelchairs would increase dramatically in range, which would both widen their appeal and increase the pressure to upgrade their durability and performance. High-performance nonfolding chairs (which now allocate 25 percent of laden weight to batteries) would clearly improve in performance with a lighter battery pack, though attention will have to be paid to stability because the heavy batteries currently used help lower the center of gravity. The possibility of lighter batteries may increase the desirability of variable-height chairs.

We should take a lesson from the fact that, at present, sealed batteries are available for cars but not wheelchairs. The wheelchair industry is small, and it will take energetic action to ensure that new battery technology gets to us.

CONTROLLERS

Higher performance wheelchairs demand higher current capacities from their controllers, and there is still a need for a safe, reliable, rugged, and inexpensive controller. There are many special features which are desirable in a controller, but with all aspects of wheelchairs, reliability and ruggedness are the basic requirements. Some possible features are:

1. *Current Limiting,* to protect the power transistors and also to prevent excess motor torque (for example, when deliberately pushing the joystick forward while moving backwards) which can tip the chair over backwards. High priority.

2. *Soft Start* circuitry that applies power gradually (even if joystick movements are sudden) to inhibit sudden acceleration without reducing hill climbing capacity (as happens with straight current limiting). This is effected by time-averaging the joystick input signal and is useful for people with motion disorders. (Reference 16 describes a time-averaging system.)

3. *Speed Limiting in Reverse,* to prevent rearward tip-over due to collisions while backing up. Low speed torque in reverse should not be reduced, however.

4. *Regenerative Braking,* to feed braking energy back into the batteries. Electric cars gain 15 percent or so in range from regenerative braking, and wheelchairs might expect somewhat greater benefits since they use braking to steer.

5. *Push-Pull Steering with Feedback,* which would use feedback of the motor speed to obtain more precise steering control. Such a system would make the joystick function as a turning radius selector (like a car's steering wheel) rather than as a steering torque selector (like a

boat's rudder or a standard wheelchair). This could increase driving control and smoothness, but would not eliminate one of the main disadvantages of push-pull steering at outdoor speeds: the unnecessary dissipation of energy because of the application of braking torque to steer the chair.

6. *Power Steering,* which does eliminate much of the inefficiency of push-pull steering at some cost in complexity. It is doubtful, however, whether a power-steered chair can ever be as maneuverable indoors as a chair with push-pull steering, which suggests the use of a power steering unit in conjunction with push-pull steering. In this concept, the power steering servo, which acts on one caster, can disengage itself at one extreme of its travel, allowing operation in the push-pull mode. When driving outdoors, the power steering is engaged (with the chair stopped) and the controller operates in a second mode using the same drive motor controls, but with control of the servo for steering. A disadvantage of power steering is that a power-steered chair, unlike a push-pull steered chair, can be tipped over fairly easily during a sharp turn on level ground. This requires either extra caution on the part of the driver or safety interlocks to prevent turning too rapidly at high speeds.

7. *Solid State Circuitry,* which eliminates the noisy and unreliable relays. A four-transistor bridge across each motor, with two transistors switched on at a time, allows on-off pulsing of the desired polarity. It is also possible to use only two transistors, and use one battery for forward, one for reverse (using the batteries the other way around for the other motor to assure even use) though this means using only a 12-volt system, with its lower efficiency and higher current requirements. (The Biomechanics Lab. is working on the design of a solid state controller, which we hope will provide smooth, somewhat regenerative braking.)

8. *Motor and Brake Temperature Sensing,* automatic circuitry or warning lights to guard against motor or brake damage from overheating. This can be a fairly simple thermal cutout device, or better, a more complicated system which reduces current to the motor if the motor overheats.

9. *Adjustable Maximum Speed and Torque,* to limit the wheelchair's performance to suit individual requirements (or for high seat positions of variable height wheelchairs). This should be in addition to the normal high/low speed switch.

10. *Downhill Speed Limiting,* a feature commonly incorporated in controllers by placing a diode across the output power transistor. (The diode also protects the transistor against reverse voltage.) When the chair exceeds its level-ground top speed, the motors generate

voltage above the battery voltage and current flows through the diode, charging the batteries and slowing down the chair.

11. *Higher-Voltage Operation.* Especially if wheelchair performance continues to improve, 36- or 48-volt systems would be very attractive in efficiency and current levels compatible with inexpensive transistors.

VARIABLE HEIGHT

Variable height is a feature which can add considerable complexity to a wheelchair, but which has definite advantages. As discussed earlier, every measure of stability is improved by lowering the chair's center of gravity, and variable-height chairs are indeed much more agreeable to drive outdoors with the seat low. A wheelchair whose seat lowers can be used for driving a van without lowering the floor or raising the roof, and that may save enough money in modifying the van to more than pay for the variable-height feature. Raising the seat above normal height is advantageous for access to counter tops and high objects, and also for conversing with standing people more nearly at eye level. The PC2 wheelchair automatically limits maximum wheelchair performance as the chair rises to the high position, to ensure adequate tipover stability.

FOLDABILITY

Especially for people who travel with the assistance of others in an automobile, it can be very useful to have a compact, lightweight electric wheelchair which can be readily folded and placed in a car's back seat or trunk. Many wheelchairs used in independent living situations are never folded, however, and in any case an indoor/outdoor wheelchair weighing 200 lb (91 kg)—including 85 lb (39 kg) of batteries—is not made much easier to handle by folding. Non-folding wheelchairs can have great advantages in strength as well as increased space for batteries, motors and accessories.

A heavy, non-folding chair has different strength/weight trade-offs than the lightweight folding electric. While unnecessary weight is to be avoided, a few pounds of additional structural weight is not nearly as important as it is with a chair that is routinely lifted by hand. High-performance chairs can and should be designed to withstand all forseeable use without structural failure.

RECLINERS

So many people require a recliner that the feature should probably be an option on all but the simplest chairs. Recliners should be care-

fully designed to obtain proper recline kinematics to avoid sliding and/or high shear forces due to the anatomical hip pivot not coinciding with the backrest pivot (17). Proper kinematics can be obtained in one of two simple ways, by sliding the seat backward a few inches during recline (as on the Falcon, Rugg Chair and E&J Independence Recliner) or by sliding the backrest downward. Of these two, sliding the backrest downward has the advantage of keeping the center of gravity of the chair as far forward as possible, which can be helpful with a chair which has rearward tipover stability problems with the backrest reclined. The sliding action of the backrest can be obtained with a freely sliding counterbalanced backrest, though such a backrest can shift into the wrong position on the user's back, which can be a real annoyance. A much better solution is to constrain the backrest motion, which can be done by one of a number of fairly simple linkages or cable-and-pulley systems.

A second problem of recliners is keeping the feet on the footrest during reclining. The problem here is that a person's body rolls backwards on the buttocks a few inches during reclining; this moves the knee backwards along the seat and pulls the feet off the footrest (if the legs are properly straightened out). In the usual arrangement where the footrests rise in coupled motion with the reclining backrest, this problem is solved simply by offsetting the footrest pivot to a point behind and below the knee position. If properly done, this causes the footrest to shift backwards the correct amount. On chairs where footrest motion is also possible independent of the recline action, the footrest pivot must be kept at the knee to ensure proper footrest action, so the simple solution described above will not work. One answer is to slide the seat forward during recline just enough to keep the knee aligned with the footrest pivot.

A third problem of recliners concerns the motion of the armrests, which should move to support the arms and keep the joystick box (if it is armrest-mounted) within easy sight and reach of the person in the chair. A method used on the PRAHN I and PC2 wheelchairs, and also on the E&J Independence Recliner, is to use an armrest pivoted from the non-sliding part of the backrest, with a link down to the seat. This configuration permits design so that the armrests follow the arm with no sliding or hunching up, and the front of the armrest tips up enough so the joystick box can be easily seen, but not so much that the arm is in danger of falling off. Collapsing the link to the seat also allows the armrest to fold away neatly for lateral transfer. The link to the seat can be above the backrest/armrest pivot, which makes it a compression link, as on the PC2. Good motion can also be obtained with an armrest pivot on the seat with a control link to the backrest.

COST-EFFECTIVE DESIGN FOR THE LIFE OF THE CHAIR

Wheelchair breakdowns are expensive, not only in inconvenience and hazard to the user, but also in terms of repair costs. This should be reflected in a design approach based on costs analyses of the entire life of the chair, including maintenance costs and the cost of repairing breakdowns (ideally with a cost allowance for inconvenience and hazard) weighted by the probability of the breakdown's occurrence.

At the risk of belaboring a point that has been made before, the selection of bearings is a good example of how considering costs over the chair's lifetime changes important design decisions. The bearing arrangement that is still most common uses unsealed bearings in an arrangement which requires careful adjustment of preload (and allows destruction of the bearings by overly tight or loose preloading). Assuming a 5-year chair life, we can make an admittedly very rough comparison with the cost of higher capacity sealed bearings in a configuration requiring no preload.

Table 5 compares the initial and lifetime cost for the two cases, based on estimates of retail prices. Note three things in that table: first, most strikingly, systems requiring regular maintenance are expensive. (The $160.00 5-year cost was built up from the manufacturer's suggested maintenance schedule and shop time allocations for the job, using a shop rate of $20.00/hr). Second, the cost of repairing the bearing failures in the field is far greater than the cost of action at the factory to prevent the failures (or make them much less likely). Third, no allowance is made for the cost of inconvenience and hazard to the user, a usual enough omission which leaves the true cost of unreliability greatly understated.

Other aspects of wheelchair design have a similar tradeoff between initial and lifetime costs. A chain or belt drive will probably have a considerably lower initial cost than an enclosed gearbox, but may require enough additional maintenance and repair to be substantially more expensive in the long run. Undersized electric motors, drive train, structural or electronic components may also produce savings in initial cost or weight, while increasing the total lifetime cost of the chair.

The redesign of wheelchairs for improved performance and heavier use should be guided by the notion that reliability, durability and maintenance-free operation are not luxuries, but necessary attributes of a safe, economical wheelchair.

BEARINGS

Three examples of sealed bearings used in configurations requiring no preload adjustment are found in Figures 20 through 22. The first

TABLE 5 — *Approximate Lifetime Bearing Costs*

Unsealed, Sealed,	adjustable preload, undersized	no preload adjustment, oversized Initial bearing
Initial bearing cost (retail, four bearings)	$ 13.20	$18.20
Cost of machining bearing fits	1.00	4.00
Cost of spacer		2.00
Initial installed bearing cost	$ 14.20	$ 24.20
Interest on initial cost difference over 5 years (@ 10% per annum)		6.11
Expected cost of lubrication, adjustment of preload (adjust preload three times annually @ $4.00 per time; lubricate and preload once annually @ $20 per time; over 5 year period)	160.00	
Expected cost of bearing replacement		
1. *Sealed bearings:* Cost: $18.20 parts plus $10 labor times expected number of replacements:		
a) Due to lubricant loss, .05 replacement in five years		1.41
b) Due to wear or damage, .20 replacement in five years		5.64
2. *Unsealed bearings:* Cost: $13.20 parts plus $10 labor times expected number of replacements		
a) Due to lack of lubricant, .20 replacement in five years	4.64	
b) Due to faulty preload adjustment, .05 replacement in five years	1.16	
c) Due to wear or damage, 1.5 replacement in five years	34.80	
Total 5-Year Cost	$214.80	$ 37.36

example, with a non-rotating axle, is used for manual wheelchair hubs by the Production Research Corporation, and is unusual for having press fits on the O.D. and I.D. of both bearings, relying on accurate press fitting to keep the bearings from applying excessive preload to each other. (Fig. 20.) Replacing the bearings is not easy, but they are sufficiently oversized so that the probability of failure is very low. This is a simple and elegant design which apparently works very well, though it is not suited to situations where the axle and hub would be at different temperatures; for example, if a brake were part of the installation. Figure 21 shows a similar configuration which permits the inner

race of one bearing to float axially to permit take-up of thermal expansion differences. The third example, with a rotating axle, is the double-row sealed bearing used on the PC2 wheelchair, a simple and compact arrangement made possible by the small (12-in.) rear wheel diameter. The bearing cost is rather high at $15.00 (small quantity wholesale price) but the bearing should outlast the chair. (Fig. 22.)

CONCLUSION

The high performance indoor/outdoor wheelchair is emerging as an important mobility option which offers good outdoor performance without sacrificing usefulness indoors. The combination of indoor and outdoor capability in a single vehicle can permit a much wider range of

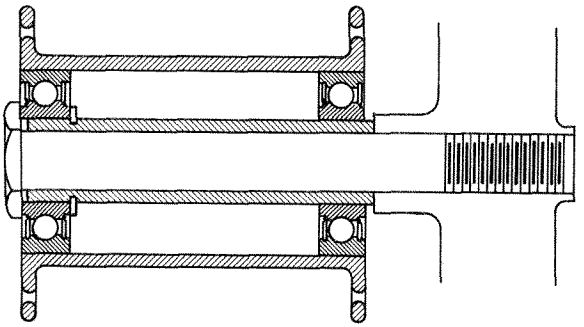

FIGURE 20.—Bearing configuration used in Production Research Corporation's manual wheelchair hubs, with press fits on inner and outer races of both bearings.

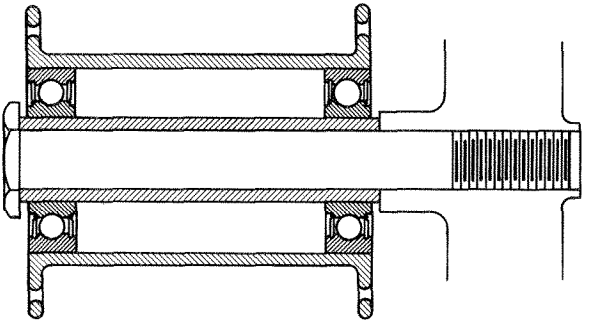

FIGURE 21.—Bearing configuration with provision for axial bearing float in case of thermal gradients, with press fits on both outer races, one inner race clamped against a snap ring, the other inner race a sliding fit.

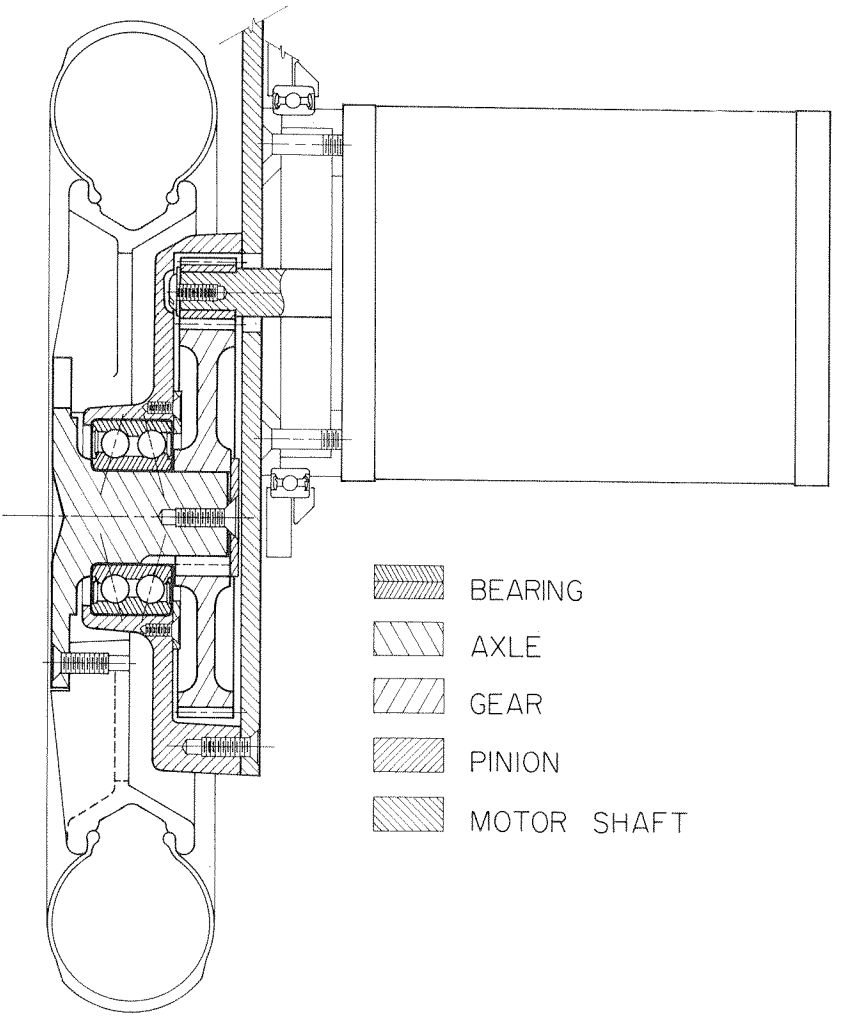

FIGURE 22. — PC2 gearbox, top sectioned view showing double-row sealed wheel bearing.

activities, including outdoor trips of several miles, than would otherwise be practical. While it is uncertain how much the present 7 mi/hr (11 km/hr) speeds can be increased, it is clear that handling, stability, ride, reliability, ruggedness and control smoothness all need to be improved for safe, effective outdoor operation. The challenge is to design these outdoor vehicle characteristics into a wheelchair which retains indoor maneuverability and the many, sometimes subtle quantities which make a wheelchair fit well into a person's life.

REFERENCES

1. Lipskin, Ronald: Trends in Nonlicensed Mobility Aids. Bull. Prosth. Res., BPR 10-22, Fall 1974, 41–52.
2. VAPC Research Report: VAPC Indoor-Outdoor Wheelchair. Bull. Prosth. Res., BPR 10-23, Spring 1975, 235–236.
3. VAPC Research Report: VAPC Indoor-Outdoor Wheelchair. Bull. Prosth. Res., BPR 10-24, Fall 1975, 176–177.
4. VAPC Research Report: Indoor-Outdoor Wheelchairs. Bull. Prosth. Res., BPR 10-26, Fall 1976, 232–234.
5. Scott, Charles M., and Ronald E. Prior: Mobility Engineering for the Severely Handicapped. Bull. Prosth. Res., BPR 10-30, Fall 1978, 248–255. *See also* Mobility Aids for the Severely Handicapped—A Status Report, C. M. Scott and R. E. Prior; Bull. Prosth. Res., BPR 10-26, Fall 1976, 192-213.
6. Radcliffe, Charles W., Don M. Cunningham, et al.: Design of Prosthetic and Orthotic Devices (Mobility Aids for the Physically Disabled). Bull Prosth. Res., BPR 10-28, Fall 1977, 151–153.
7. Cunningham, Don M.: Variable-Height Powered Wheelchair for the Quadriplegic Driver. Bull Prosth. Res., 10-22, Fall 1974, 337–369.
8. University of Michigan RECorder, Rehabilitation Engineering Center, Ann Arbor, Michigan, 1(1), 1979.
9. VAPC Research Report: Handicar TVE. Bull. Prosth. Res., BPR 10-30, Fall 1978, 143–144.
10. Kauzlarich, J. J., and L. Kline: Battery Testing. Univ. of Virginia REC Annual Report — 1978, 56–66.
11. Electro-Craft Corp.: DC Motors/Speed Controls/Servo Systems. Hopkins, Minn., 1975.
12. Dengler, M., et al.: A Bibliographic Survey of Automobile and Aircraft Wheel Shimmy. Wright Air Development Center, Dayton, Ohio, Tech. Report, 52–141, 1951.
13. Moreland, William J.: Landing-Gear Vibration. AF Tech Report No. 6590, 1951.
14. Kauzlarich, J. J., and L. Kline: Auxiliary Power for Wheelchairs. Univ. of Virginia REC Annual Report — 1978, 12–15.
15. Behrin, E., et al.: Energy Storage Systems for Automobile Propulsion. Lawrence Livermore Laboratory Report, Livermore, Calif., UCRL-52303, 2, p. 29, 1977.
16. Aylor, J., et al.: Versatile Wheelchair Control System. Med. & Biol. Eng. & Comput. 17:110–114, 1979.
17. Warren, C. G., M. Ko, and E. Delahanty: Kinematic Analysis of Quadriplegic Persons Using Powered Reclining Wheelchairs. Proc., 5th Ann. Conf. on Systems and Devices for the Disabled, 77–80, 1978.