Bulletin of Prosthetics Research
BPR 10-33 (Vol. 17 No. 1) Spring 1980
Pages 9-30

Development of Test Methods for Evaluation of Wheelchair Cushions[a]

GEORGE VAN B. COCHRAN, M.D., Sc. D., VINCENT PALMIERI

Soft Tissue Mechanics Research Group
Biomechanics Research Unit
Helen Hayes Hospital
West Haverstraw, New York 10993

INTRODUCTION

Prevention of decubitus ulcers continues to be one of the primary problems confronting rehabilitation engineers. One vital aspect of this subject concerns the design, selection, and evaluation of wheelchair cushions to reduce tissue trauma in the seated patient, particularly those with spinal cord injuries. A large number of types and models of commercially available wheelchair cushions and other seating devices exist, and many claims are made for their attributes. Despite the extensive literature on this subject, the fact remains that no comprehensive program for evaluation of available cushions exists. Development of test methods, and eventually of standards, for cushions would permit institutions and large health care organizations such as the Veterans Administration to make informed selections for volume purchases of cushions, as well as improve designs and facilitate prescription of specific cushions for individual patients.

Recognizing the importance of this subject, the Veterans Administration Prosthetics Center has encouraged cushion research for several years. In 1973, the senior author published a pilot study in which types and requirements for wheelchair cushions were reviewed and a preliminary or experimental scheme for testing them was proposed (1). At the time, it was recognized that the test protocol had many inaccuracies and deficiencies, yet it represented the only attempt to develop a comprehensive approach to cushion evaluation.

More recently, a new project was undertaken to extend the pilot program toward practical use. This paper will present the resulting test protocol, together with the rationale for each test and results typical of four major types or categories of cushions: foam, "viscoelastic foam", gel, and "fluid floatation". Although the protocol was designed to be applicable to as wide a variety of finished types of cushions as possible, it is obvious that all of the tests cannot be relevant in certain special cases, such as custom-molded or mechanically active seating devices.

The protocol to be presented is relatively complex despite continual efforts at simplification; this situation is a good illustration of the difficulty of the problems and the danger of drawing conclusions based on a single test such as interface pressure measurement. In the end, long-term clinical trials could give the best information, but these would be extremely cumbersome with a large number of cushions. One of the purposes of this test or evaluation protocol is actually to provide information useful in making preliminary selections and design improvements prior to such trials. Also, the data can be employed to draw attention to the strong and weak aspects of each cushion. Consequently, an estimated range of preferred results is given for each test.

Eventually, results of tests similar to these could be used as a basis for establishing minimum standards for cushions, but this must await more knowledge on the clinical significance of each parameter.

[a]This research was supported by VA Contract V5244 P-1375.

HISTORICAL REVIEW

Earlier work on the subject was reviewed in the prior publication (1). Then as now, the typical approach to cushion testing taken by most investigators involved measurement of interface pressures utilizing normal or patient subjects on various cushions. While this technique provides some data for comparative purposes, it provides little insight into the mechanical interaction between cushion and subject.

In our pilot study, an attempt was made to characterize the mechanical behavior of cushions by a series of bench tests, and to assess their clinical performance by a series of clinical tests utilizing selected test subjects. An outline of the original pilot protocol is shown in Table 1.

TABLE 1.
Summary of Pilot Test Protocol (1973)

Laboratory Tests:	Clinical Tests:
Load-Indentation	Patient Sitting Pressure
Creep / Recovery	Patient Skin Reaction
Pressure Distribution	Patient's Evaluation
Rapid Loading	

Omitted in those early tests were assessments of other biophysical factors, such as temperature and humidity, that are known to have clinical significance.

In the interim, other workers have contributed significantly to the problem of cushion evaluation. Chow (2), in a doctoral thesis, surveyed requirements and qualities of seat cushions, defined a number of criteria by which their properties might be measured, and developed several bench tests applicable to the problem. His work probably represents the most exhaustive analysis of cushion properties available at present. In addition, Trandel (3) in another doctoral project experimented with thermography in seat cushion evaluation; he also developed practical techniques for humidity measurement at the buttock-cushion interface(4). Additional work on temperature and humidity measurement has been accomplished by Brattgard et al. (5), Fisher et al. (6), and Stewart et al. (7), the last being an outgrowth of the present project. Finally, on pressure measurement, Ferguson-Pell has prepared an exhaustive review and developed a new thin transducer (8) (9), while data on calibration of pressure transducers for interface measurements is reported by the present authors (10, 11).

PRESENT STUDY

In the course of developing these test methods, the bench testing system constructed for the pilot study was redesigned and rebuilt, and the entire protocol for laboratory and clinical tests was revised and extended. Details of the empirical process of test development will not be given here. Instead, the resulting test protocol is presented in full together with comments on the rationale and significance of each test, along with a preferred range of test results based on experience in testing 24 commercial cushions. In addition to the prior study (1), elements of the test protocol are drawn from several sources including Chow (2), Trandel (4), Stewart et al. (7), and ASTM standards for foam materials (12, 13). An outline of the current test protocol is given in Table 2 and a detailed description is given in the following section. Mean results obtained from testing the 24 commercial cushions are given later in this paper, together with sample reports about each of the representative cushion types. (Identification of cushions tested will not be provided here, but individual reports may be obtained from the VA Prosthetics Center.)

A TEST PROTOCOL FOR EVALUATION OF WHEELCHAIR CUSHIONS

Scope

These tests and specifications apply to all finished cushions and/or cushion materials that are manufactured and/or sold for use as padding in wheelchairs. The tests are intended to provide a picture of overall performance and suitability in providing comfort, stability and optimal skin-cushion interface conditions for paralyzed and other disabled persons confined to a bed-wheelchair status. For this purpose, the tests are designed to reflect not only the inherent properties of the underlying materials, but also factors relating to dimensions and covering materials. Consequently, they are applicable primarily to cushion units in the form used by patients — not to samples of the component materials.

The tests are not intended to be used to rank cushions on an overall basis. Instead, results are provided in the form of individual reports citing performance relative to a Reference Cushion and commenting on specific favorable and unfavorable aspects of cushion performance. These data may be utilized by those who wish to upgrade cushion performance by design changes, as well as those who select cushions to fit individual patient needs on a prescription basis.

Types of cushions covered include all major categories of cushions, including foam (latex, polyurethane and other types), viscoelastic foam, gel, fluid, air or particle-filled, and special or combination units. Custom-made form-fitting cushions, mechanically active alternating pressure cushions, and other unique designs may not be adaptable to the entire test program, but limited evaluations can be accomplished.

Test Samples and Conditions

Specimens shall consist of the complete cushion or pad in unused condition, and shall be tested within 1 yr of manufacture. Any covering intended for use by the patient shall be in place. For testing of materials used as cushions in an unfinished state, the billet size shall be no less than 15 x 15 x 2 inches (38 x 38 x 5 cm). Specimens otherwise uncovered shall be covered loosely with thin cotton jersey material during testing.

Reference Cushion

Cushion tests are subject to a large number of variables inherent in the materials as well as in the testing apparatus, transducers, and environment. For this reason all test systems are standardized prior to each test session, utilizing a selected type of readily available polyether foam material in a 4-in. (10 cm) thickness. This standard shall be known as the "Reference Cushion." For each series of cushion tests, data for the Reference Cushion are recorded initially for a series of three tests on each of three reference samples. Thereafter, as long as the same reference is maintained, measuring devices can be recalibrated. In all cases, test results are normalized by expressing data as a "Performance Factor" in relation to the "Reference Cushion", thus:

$$\frac{\text{test cushion data}}{\text{Reference Cushion data}} = \text{Performance Factor}$$

The Performance Factor is the only data cited in the Cushion Evaluation Report (see Reporting of Results), but should raw values be required, they can be calculated easily using the raw Reference Cushion Results, which are supplied with each report.

In the absence of any existing standard wheelchair cushion, Rogers Foam Co. Type 1836 polyether foam was selected for the initial Reference Cushion. This material is appropriate because it represents a good quality foam of a type generally accepted as suitable for seating by both patients and physicians.

Tests are conducted under room conditions, at known temperature and humidity in the range of 20–25 deg.C and 30–50 percent R.H. Cushions should be equilibrated under the room conditions for 24 hours prior to testing.

One specimen of each type is tested and each test is repeated three times. The values reported are the mean of those observed. If any value deviates more than 30 percent from the mean, one additional specimen is tested and the mean for all six values reported. A minimum 4-hour recovery period is mandatory between different or repeated test programs on each specimen.

Overview of Test Methods and Reporting

The protocol consists of two separate test programs with results correlated to produce a Cushion Evaluation Report for each specimen (Table 2).

Laboratory Tests: Programs A, B, C, D, E. Cushions are loaded in several configurations in specially designed test apparatus while measurements of load, deflection, pressure, and other parameters are made under specified conditions.

Clinical Tests: Programs F, G, H. Cushions are tested for performance beneath human test subjects. Under Programs F and G, actual pressure, temperature, humidity, and heat flux measurements are made on normal volunteers. Under Program H. patient subjects are evaluated for skin reaction and subjective comfort sensations.

TABLE 2.
Summary of Current Test Protocol

LABORATORY TESTS:	CLINICAL TESTS:
Program A — Vertical Load-Indentation	Program F — Sitting Pressure
Lab A-1: Vertical Spring Characteristic	Clin. F-1: Interface Pressure
Lab A-2: Bottoming Resistance	
Program B — Rapid Loading	Program G — Thermal Factors
Lab B-1: Damping Ratio	Clin. G-1: Skin Temperature Change
	Clin. G-2: Heat Flux Change
Program C — Creep-Recovery	Clin. G-3: Humidity
Lab C-1: 10 min Creep	
Lab C-2: 10 min Pressure Rise	Program H — Patient Factors
Lab C-3: 10 min Recovery	Clin. H-1: Patient Skin Reaction
	Clin. H-2: Patient's Evaluation
Program D — Envelopment	
Lab D-1: Envelopment Quality	
Program E — Shear Load Deflection	
Lab E-1: Horizontal Spring Characteristic	

Reporting of Results. Data for each cushion tested are reported separately on a form which provides the following information:

1. Cushion description;
2. Performance Factor for each test;
3. Interpretation, in terms of negative and positive aspects of the cushion; and
4. Overall Evaluation.

Preferred Performance. In the absence of any existing standards for wheelchair cushions, several factors were incorporated to estimate a preferred range of Performance Factors for each test. These included the qualities of the Reference Cushion and results from the test group of 24 cushions together with obvious clinical needs.

Actual test values and results for the Reference Cushion, and a preferred range of Performance Factors for each test, are provided on a separate sheet with each report.

Rationale for Interpretation of Reports. No attempt is made to rank cushions in order of effectiveness: because of the diversity of cushion construction, good results in one category tend to be balanced by poorer results in another, so that the net result would be for most cushions to be rated similarly in any overall scoring system. Also, all tests may not be applicable to all cushions.

In the final evaluation, each cushion must first be considered for its conformance to the preferred range of values in each of the various tests completed. Then, both negative and positive aspects must be balanced and a judgment made to indicate the overall suitability of each cushion for general purposes as well as for use in critical situations where skin is at risk. Finally, special advantages of each cushion that may make it particularly suitable for specific types of patients should be noted.

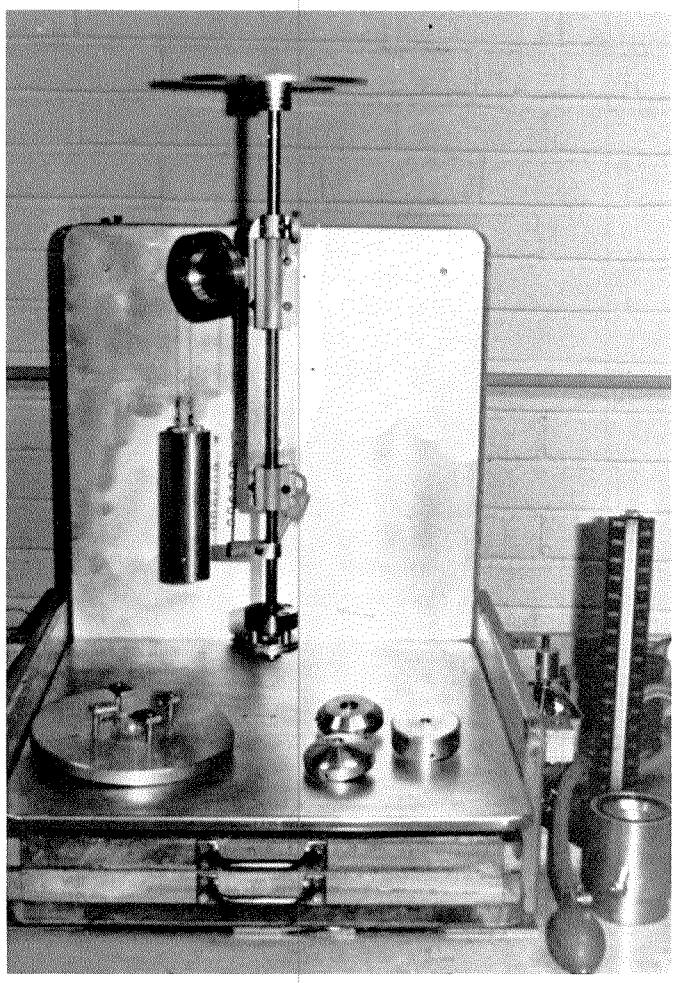

FIGURE 1.
Load-indentation device used for laboratory tests. Shown are the 50 in^2 disk used for conditioning, the flat indentor head, the beveled head used for envelopment tests, and a rounded head used in developmental trials.

Laboratory Test Programs and Procedures

Apparatus. The mechanical test apparatus consists of a rigid metal support stand, with a counterbalanced vertical plunger assembly perpendicular to the bottom plate of the stand. The plunger runs in linear ball bearings and is equipped with a weight loading platform at the top end; provision also is made for attachment of a motor to provide cyclical load conditioning. An electronic load cell (Sensotec PEP 0-200 pounds) is attached to the lower end of the plunger which in turn is attached to an indentor foot with an electronic pressure transducer (Sensotec Type "L" 1/4-28, 0-5 psig) at its center (Fig. 1 and Fig. 2). If possible, the diaphragm of the transducer should be separated from the cushion by a cell consisting of a fluid-filled membrane, to eliminate shear forces.

The indentor foot is designed to accept heads of different types — used routinely are a "flat" indentor and another indentor head which when mounted has a protruding area in the center (Fig. 3). Plunger excursion is monitored electronically by a potentiometer connected to the pulley controlling the plunger counterweight. The bottom plate size is a minimum of 20 x 22 in. (50 cm x 56 cm) to permit testing of a 16 x 16 in. (40.6 cm x 40.6 cm) cushion without contacting side walls. At the center of the bottom plate, two pressure transducers (Sensotec Type "S" 1/4-28, 0-25 psig) are flush-mounted: one directly beneath the transducer at the center of the indentor foot, and another (optional) 1.2 in. (3 cm) laterally. The transducers are covered with a thin leather sheet to minimize shear effects. The base plate is adjustable in height, allowing the plunger to be used within a similar excursion with cushions of thickness varying from 2 to 6 inches (5–16 cm).

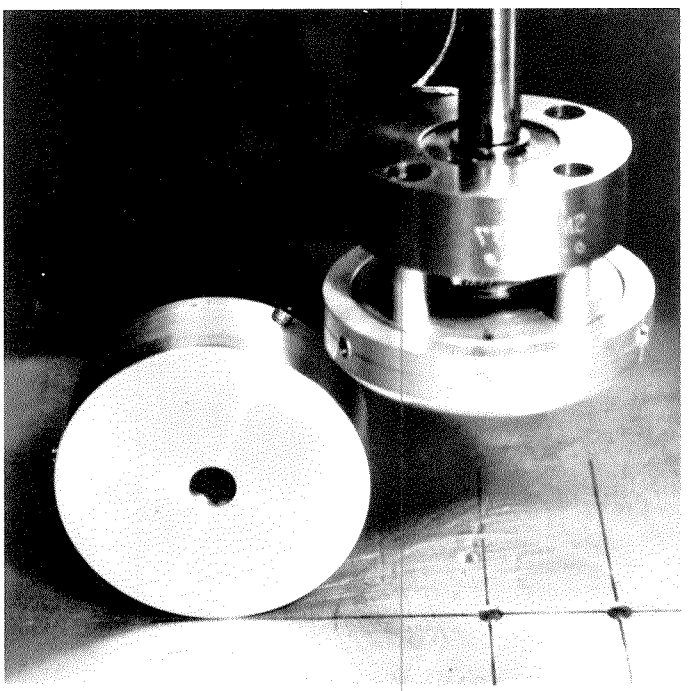

FIGURE 2.
Indentor foot with load cell and beveled indentor head attached. At left is the interchangeable flat head with cut-out for pressure transducer assembly; transducers implanted flush in the bottom plate are also visable.

For routine loading, all cushions are constrained by a flat board weighing 8 lb (36 N) placed over the cushions and held by bolts at the resting thickness of the cushions. A 6-in (15-cm) diameter hole in the center permits use of the standard indentor without restraint (Fig. 4). This system is utilized for all indentor tests (with the exception of the envelopment test). The purpose of this constraint is to prevent the edges of the cushion from turning up when a small-area indentor is used, as well as to reduce the tendency to "bottom out". (When tested with the specified indentors, many cushions exaggerate this tendency because they are intended to accommodate the normal buttock/posterior-thigh surface area which is in the order of 100 in.^{2}(646 cm^2)—a size which is impractical for these tests).

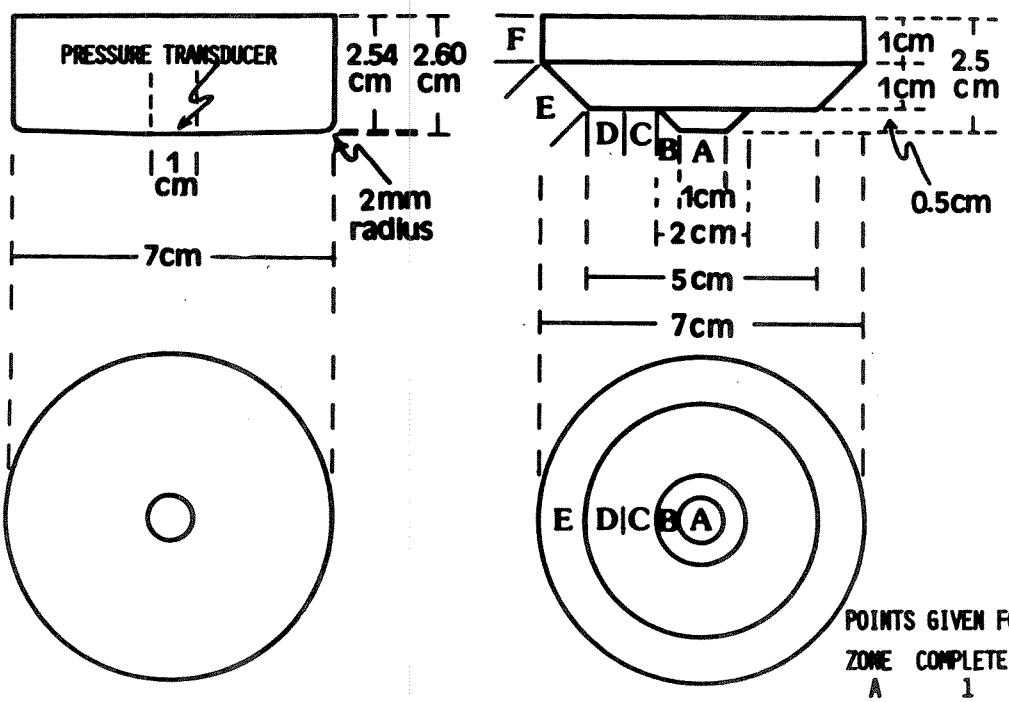

POINTS GIVEN FOR CONTACT

ZONE	COMPLETE	PARTIAL
A	1	0.5
B	1	0.5
C	2	1.0
D	1	0.5
E	1	0.5
F	4	1-2

FIGURE 3.
Diagram of "Flat" (left) and "Beveled" (right) indentor heads. The scoring system for contact utilized for the Envelopment Quality test is shown at right.

FIGURE 4.
Overall view of testing apparatus showing loading device with Reference Cushion in place and 6-channel and X-Y recorders at left. Note that the top plate, used to constrain cushion in most tests, is in place in this view.

Mechanical Conditioning. All cushions shall be subjected to a 12 hr cyclical conditioning cycle at room conditions prior to the test program. For this conditioning, a 50 in.^{2} (323 cm^2) flat, indenting disk is used, loaded so that the baseplate pressure transducer beneath the disk center reads 0.5 psi (26 mm Hg). A motorized attachment to the plunger is adjusted to apply an additional, cyclical load adequate to increase pressure to 1 psi (52 mm Hg) at a frequency of 2 cycles/min (0.03Hz). Following this conditioning, cushions are allowed to recover for a minimum of 4 hrs before testing.

Program A: Vertical Load-Indentation Tests. This load-indentation test employs the "flat" indentor head. The indentor is brought into contact with the cushion and balanced with counterweights, to give a minimal preload with the restraining top plate set to cushion thickness. Dead weight loads then are added to the plunger in 10-lb (44.5-N) increments to 40 lb. (178N), and in 5-lb (22.24N) increments thereafter to a maximum of 90 lb.(400N). Loads and deflections are recorded electronically, as are pressures at the center of the indentor on the top surface of the cushion, as well as beneath the cushion.

The *Vertical Spring Characteristic* is determined as the slope of the curve between the 25-percent and 65-percent deflection points.

The value for *Bottoming Resistance* is determined by subtracting the percentage of deflection at 1 psi from the percentage of deflection at 3 psi, using pressures as measured beneath the cushion. (For Bottoming Resistance, pressures measured at the top surface of the cushion would be more realistic, but measurements at the bottom surface are technically easier although they tend to be roughly half the top surface value.) The test levels are selected to be slightly higher than those that might be expected during normal sitting.

Finally, as an added *note:* either the pressure at which the load deflection curve exhibits a marked change in slope is indicated, or the term "linear" is employed to indicate that no abrupt change in slope occurs.

Rationale (Program A). The Vertical Spring Characteristic indicates the relative stiffness of the cushion, a factor which affects the depth to which the patient will sink into the cushion and thus the support surface provided. Selection of the 25-percent and 65-percent points for determination of the Spring Characteristic is related to ASTM Test D–1564 for Slab Flexible Urethane Foams (13), in which cushions are loaded to these deflections with a 50-in^2 (323-cm^2) disk. Too soft a cushion will provide a large support surface but permits "bottoming" too easily, creating high local pressures; too hard a cushion will provide only a small support surface and produces high pressures over the whole contact area.

If a cushion bottoms out, an undesirable condition exists in which the pressures measured at top and bottom surfaces of a cushion tend to become equal. In this state, relatively small increases in deflection are needed to produce large changes in pressure, which can be detrimental to the patient. In this test, a bottoming tendency is suggested (i) if only a relatively small increment in deflection is required to triple the pressure or (ii) if there is an abrupt change in slope in the curve.

For the Load-Indentation tests, favorable results would include an intermediate Vertical Spring Characteristic, and a relatively high Bottoming Resistance with a relatively linear curve throughout the loading range. A good cushion will be soft enough to minimize interface pressures while maintaining a high resistance to bottoming to provide protection during sudden movements of the patient or his environment.

Summary (Program A)

Test Lab. A-1: Vertical Spring Characteristic

Reference Cushion Result	: 0.49 (slope, 25-65 percent deflection) (see text)
Preferred Range of Values	: 0.45 - 1.8
Preferred Performance Factor	: 0.90 - 3.6 (intermediate best, optimum unknown)

Test Lab. A-2: Bottoming Resistance

Reference Cushion Result	: 10 percent increase deflection 1-3 psi: see text page 14.
Preferred Range of Values	: 9–40 percent
Preferred Performance Factor	: 0.9–4 (higher better)

Note: The Reference Cushion demonstrates a sharp increase in slope of both pressure and load/deflection curves at approximately 85 percent deflection. Optimum performance would be represented by a linear increase.

Program B: Rapid Loading. This variation on the load-indentation test again employs the flat indentor. In this case, it is placed at the surface of the cushion and locked there under a load of 25 lb (111N). To test, the lock is released, allowing the weight to load the cushion by gravity. Rise time, peak and final (resting) pressures under load, and duration of oscillations following loading, are recorded.

The *Damping Ratio* for the cushion is calculated as follows (utilizing pressures measured beneath the cushion):

$$\frac{\text{resting (final) pressure}}{\text{peak pressure}}$$

Time for persistence of oscillation is also recorded as a note.

Rationale (Program B). Sudden pressure peaks, caused by patient movement and wheelchair motions, tend to be reduced if a cushion has the ability to damp out changes, by limiting the peak pressure and limiting the oscillation time after the event. For this test, an optimal result would be resting values equal to peak pressures (damping factor of 1), with an oscillation time of 0. Results smaller than one indicate decreasing tendency to damp sudden pressure change. (Often these factors also are related to the tendency of the cushion to resist bottoming.)

Summary (Program B)

Test: Lab B-1, Damping Ratio:

Reference Cushion Result	: 0.44 (Resting/peak pressure)
Preferred Range of Values	: 0.35–1
Preferred Performance Factor	: 0.80–2+ (higher better)

Note: Oscillation Time—The Reference Cushion oscillates for 0.5–1 sec. Zero oscillation would be ideal.

Program C: Creep/Recovery. The flat indentor is placed in contact with the top surface of the cushion and loaded to produce a 2 psi (104 mm Hg) pressure beneath the cushion. Percent deflection at 1 and 10 min is recorded, as is pressure.

On removal of weights, recovery is noted at 1 min and at 10 min with indentor in place—also, any residual depression following lifting of the indentor is described.

Creep is determined as mean increase in percent deflection during the 10-min interval following the first minute of loading.

Pressure Rise measures any increase in pressure beneath the cushion during this interval.

Recovery measures residual deformation 10 min after the load is removed.

Rationale (Program C). Moderate creep (viscoelasticity) is desirable as it tends to improve energy absorption as well as conformity of the cushion to the patient. Excessive creep or continuing creep are undesirable because pressures tend to increase as a bottoming point is approached. Also undesirable is a lack of recovery (resilience), since this suggests a poor ability of the cushion to maintain conformity in the face of changing positions of the patient.

Summary (Program C)

Test: Lab C-1, 10 Minute Creep

Reference Cushion Result	: 1.4 percent (increase indentation)
Preferred Range of Values	: 1.4 percent - 10 percent
Preferred Performance Factor	: 1 - 8 (lower better)

Test: Lab C-2, 10 Minute Pressure Rise

Reference Cushion Result	: 9.2 percent (increase pressure)
Preferred Range of Values	: 0-15 percent (if stabilized)
Preferred Performance Factor	: 0 - 1.5 (lower better)

Test: Lab C-3, 10 Minute Recovery

Reference Cushion Result	: 98.7 percent (recovery indentation)
Preferred Range of Values	: 90–100 percent
Preferred Performance Factor	: 0.9 - 1 (higher better)

Program D: Envelopment. The special bilevel indentor head is utilized in this test, and the top plate constraining the cushion is removed. The surface of the indentor is divided into 6 zones with a point system in which a value is assigned to each, based on difficulty of contact during indentation (Fig.3). The head is then indented under a load of 25 lb (111N). Contact areas are observed by inking the indentor and noting contact areas on the cushion to determine score.

The *Envelopment Quality* is computed by the point score, with "perfect" envelopment indicated by 10 points.

Rationale (Program D). This test is related to the cushion's ability to enfold and equalize pressure about irregularities in the patient's contours or those caused by inadvertent objects in pockets, irregularities in clothing, etc. As such, envelopment has an important role in reducing hot spots and pressure gradients. (In many cases, skin effects from cushion coverings drastically reduce effectiveness of the core material; this effect can be confirmed by comparison tests with and without the cover.) In this test, uncovered foam materials provide the optimum result short of support by a hydraulic fluid.

It should be noted that for thin cushions (2 inches or less), envelopment will vary with subpadding if present. Thus, a thin cushion may perform better on a wheelchair sling seat than on a firm surface.

Summary (Program D)

Test: Lab D-1, Envelopment Quality

Reference Cushion Result	: 7 points with stretch cover; 10 with no cover.
Preferred Range of Values	: 5–10
Preferred Performance Factor	: 0.7–1.4 (higher better)

Program E: Shear, Load-Deflection Tests. For this test, a separate, horizontal, load-deflection apparatus is utilized, in which a top plate is applied to the cushion and horizontal deflection of the top surface of the cushion is measured by means of a dial micrometer under a specified shear load. The plate is loaded to produce a pressure of approximately 0.1 psi on the cushion surface in contact with the plate. This is adequate to prevent slip between plate and cushion without significant deformation of the entire cushion, because nonslip sanded surfaces are used on the plates that contact the cushion. The cushion cover is left in place. (Fig.5)

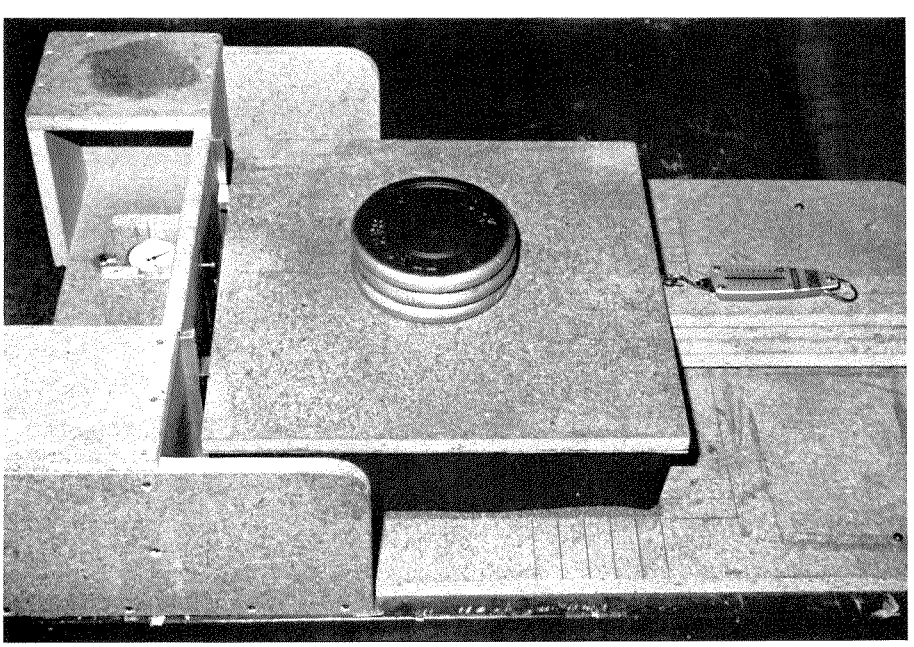

FIGURE 5
— Apparatus for shear load-deflection testing. Note the weighted top plate, spring loading device and dial micrometer to detect motion of top plate. Results of this test vary with both cushion material and thickness.

The Horizontal Spring Characteristic is denoted by the actual displacement of the top plate as a result of shearing deformation of the test cushion at a standard load of 4.4 lb (20 N). (Results also are checked under a load of 2.2 lb and linearity noted.)

Rationale (Program E). A cushion with a stiff horizontal spring characteristic will tend to resist horizontal articulation, and thus will increase shear forces on tissues during side loading caused by patient movement and body position–an undesirable effect. On the other hand, this factor also is related to patient stability; if the horizontal spring characteristic is too soft, the patient will shift sideways on the cushion too easily and may complain of instability, particularly if the subject is paralyzed,and if the cushion has a low Envelopment Quality.

In this test, foams tend to produce a rather high resistance to horizontal deformation and as a result, the Reference Cushion is close to the minimum desirable performance in this parameter. Clinically, the effective horizontal stiffness and stability also is increased by the degree of envelopment.

Summary (Program E)

Test: Lab E-1, Horizontal Spring Characteristic

Reference Cushion Result	: 0.42 mm (linear)
Preferred Range of Values	: 0.4 - 5mm
Preferred Performance Factor	: 1 - 10 (intermediate best)

Note: Most cushions produce linear results in this load range; non-linear performance may indicate artifact due to slippage between cover and cushion.

Clinical Test Programs and Procedures

Apparatus. Programs F and G are conducted with a single selected, normal subject, so that comparative data on each cushion may be compared and variables referable to the subject minimized. The "VA barograph" device is utilized initially without a cushion to obtain a pattern of the subject's high pressure areas during sitting so that the transducers may be attached at the most advantageous points. The "barograph" consists of an edge-lighted flat glass plate. On this plate is a rubber sheet, one side of which is shaped into pyramids. When loaded by sitting, the device projects a pattern, proportional to pressures, onto a mirror beneath. For these tests, a simulated adjustable wheelchair seat is constructed on the barograph which then serves as a flat base for the cushions during measurements. (Prior to the tests, it is important to adjust the seat components such as back, arm and footrest, so that the subject may assume a reproducible position as each cushion is tested in turn.)

Program H is conducted on a series of carefully selected and trained patient subjects as described below. The patient's own wheelchair, standardized by placement of a ⅜ in (1cm) flat plywood board across the seat, is used for these tests.

Program F: Sitting Pressure. A normal subject is selected and evaluated first by seating on the VA barograph device without cushion, to determine location of buttock high pressure areas.

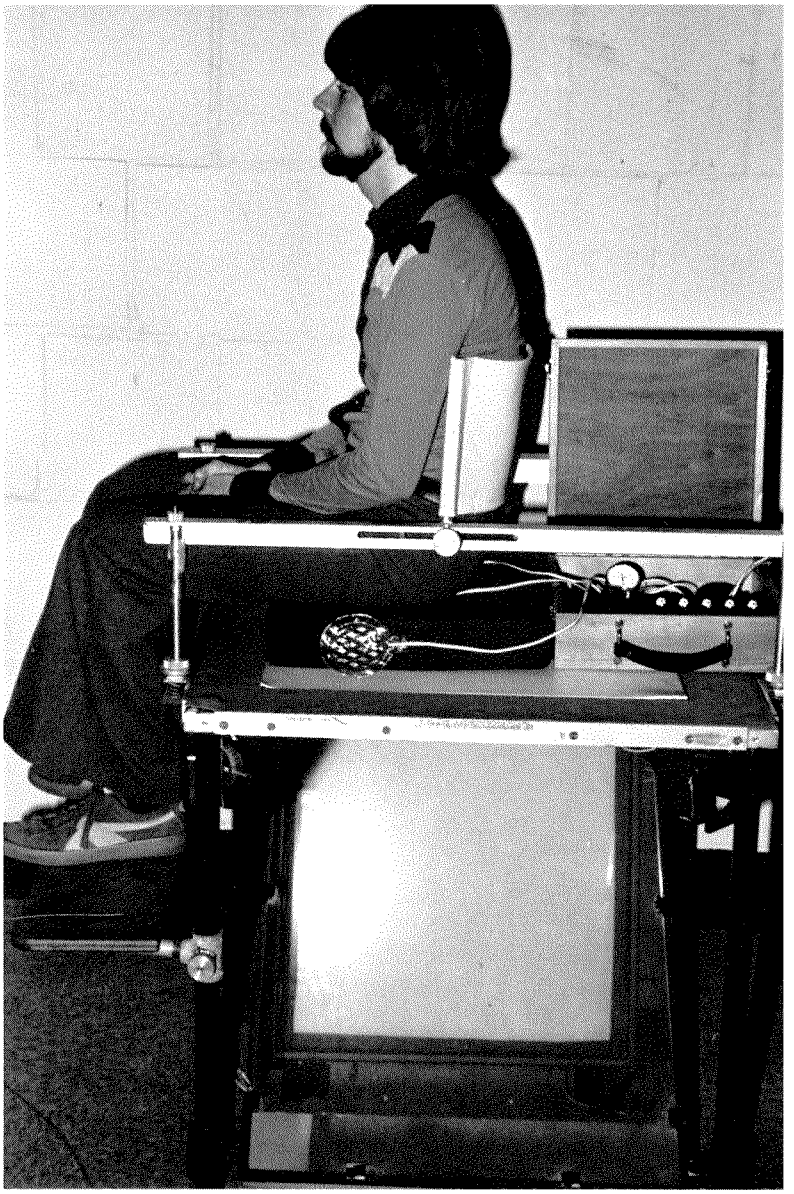

FIGURE 6
Subject demonstrating seating position for the interface pressure tests using the VA barograph as an adjustable test platform. Scimedics air cell transducer is shown alongside the cushion. At right is a special 5 unit air-cell control box developed in this laboratory.

A single air cell pressure transducer (Scimedics, Inc.) is taped in place over each ischial tuberosity as located with barograph.

The actual pressure measurements are conducted on the barograph table with its adjustable seat, but the barograph pattern is not utilized during pressure measurements because the pressure pattern beneath the cushions is too diffuse to be helpful. Baseline pressure is established by sitting on the Reference Cushion in a standard configuration of arm and leg support (Fig.6). Without altering position of the pressure transducers, all other cushions in the series are then tested in sequence; mean pressures are recorded and expressed as a percentage of pressure on the Reference Cushion (performance factor), based on mean of Reference Cushion values obtained immediately before and after the test series. All cushions are tested on the flat surface of the barograph table. To assure reproducibility of sitting height with respect to arm and foot rests, 1 and 2 in boards (2.5–5 cm) should be available to place beneath thin or very soft cushions. Peak pressures need not be measured, since all readings are

normalized by comparison to the Reference Cushion. Relative values of pressure measurements and positioning may be checked with the Krouskop 144 Air Cell Matrix device, if desired.

Rationale (Program F). Interface pressures are the traditional manner by which cushion effectiveness is judged, on the theory that it is desirable to maintain the pressure as close to capillary pressure as possible (or below). Unfortunately, this may give a biased view of a cushion, since many other factors are involved. Also, measurement of interface pressure is subject to various difficulties, and results differ with measurement conditions. For this reason, the actual pressure value measured is relatively meaningless, and it is not essential to identify the maximum pressure experienced. Instead, a relative figure on the effectiveness of a given cushion in reducing pressure is obtained by normalizing results in comparison to the Reference Cushion results under the same test conditions.

Summary (Program F)

Test: Clin. F-1, Interface Pressures (skin/cushion)

Reference Cushion Result	: 1.28 psi (67 mm Hg)
Preferred Range of Values	: 1–1.8 psi (50—90 mm Hg)
Preferred Performance Factor	: 0–1.4 (lower better).

Program G: Thermal Factors (Temperature/Heat Flow/Humidity). The test subject sits on the test cushion using the same seat arrangements as for Program F and is instrumented with the following devices (Fig. 7) or their equivalents:

Right Buttock—heat flux sensor (Thermonetics Corp. model H12-18-5-SHF), and temperature sensor (Hy-Cal Engineering Thermocouple TC-2345-T-T-10-30).

Left Buttock—temperature sensor (as above) and relative humidity sensor (Humidial Corp. P/N 20-90RH humidity indicator in a special holder).

A third thermocouple is taped to the right hip as a control.

Temperatures and heat flux are monitored over a 90 min test period. After a 10 minute equilibration period in room air (Temp. 22-24 deg. C; R.H. 35–40 percent), readings should be taken initially at 0 (standing),and then at 30, 60, and 90 minutes (sitting continuously). For this program, change in temperature (deg. C) and change in heat flux (kilocal /m^2 · hr) during sitting (from initial values in air, standing) should be determined and any unusual deviations at the 30 and 60 minute intervals noted. Relative humidity readings are obtained only at 90 minutes, and the actual values compared to the result for the Reference Cushion.

Rationale (Program G). Heating or cooling effects of cushions are important since each 1 deg (C) rise in temperature can increase tissue metabolism and oxygen demand by a significant amount. Heat Flux measures the cushion's ability to absorb and transmit heat and is the basic characteristic responsible for temperature change. Excessive cooling, a factor related to patient comfort, is sometimes noted in water-filled cushions. Foam cushions, being warm, constitute the minimal acceptable standard in this regard. On the other hand, the pores in open-cell foams tend to limit moisture buildup. In tissues with borderline viability, excessive moisture also can contribute to tissue maceration and damage. Porous covers aid in controlling the increase in humidity in the skin environment during sitting, particularly when used with porous cushions.

Summary (Program G)

Although 90 minutes is recommended, a 60-minute interval was used for all tests reported in this paper.

Test: Clin. G-1, Skin Temperature Change

Reference Cushion Result (60 min)	: (+)3.5 deg C (change during sitting)
Preferred Range of Values	: 0(±)2 deg C
Preferred Performance Factor	: 0(±)0.6 (lower/negative better)

Note: 0 deg. change is optimum for comfort. Actual cooling may have prophylactic value with regard to tissue breakdown.

Test: Clin.G-2, Heat Flux

Reference Cushion Result (60 min)	: (-)16 kilocal/m^2 · hr (change during sitting)
Preferred Range of Values	: 0–(+)40
Preferred Performance Factor	: 0–(-)2.5 (intermediate/negative optimal for comfort)

Note: $\text{P.F.} = \frac{\text{test}}{\text{Ref.}} : \frac{40}{(-)16} = (-)\ 2.5\ \text{P.F.}$

The decrease in heat flux on the Reference Cushion is consistent with the temperature-increasing (insulating) effect of foams.After 60–90 minutes, temperature and heat flux changes tended to stabilize, so 90 min values are more consistent and meaningful.)

Test: Clin. G-3, Humidity

Reference Cushion Result (0 min)	: 40 – 45 percent R.H.
Preferred Range of Values	: 40 – 65 percent R.H.
Preferred Performance Factor	: 1 – 1.5 (lower better)

Program H: Patient Factors. The ultimate test of a cushion is a matter of the objective and subjective effects on patients. Unfortunately, these data are extremely difficult to obtain in meaningful form over long periods on a large number of cushion samples. The tests described here are designed to obtain short-term clinical data on cushion performance, based on observation of skin reaction to sitting — and on the patient's own subjective reactions to the cushions.

For this work, each cushion shall be tested on a minimum of three trained patient subjects with relatively sensitive skin reactions. Selection of reliable subjects for these tests is a key point, as it has proved impractical to conduct the tests on many cushions with more than 3-6 subjects. Because subjective

evaluation is accomplished at the same time, each subject should be established as an individual able to give thoughtful repeatable evaluations. For these tests, patients should have partial or normal sensation, should be capable of wheelchair sitting for 3 hours, and are limited to one cushion trial/day.

Although paraplegic patients may be superior in terms of demonstrating skin reaction, they present severe logistical problems in the handling of tests on a large series of cushions.

Placement of a plywood board beneath the cushion is intended to reduce variations caused by sling seats, cut-outs, and other variations.

By normalizing with respect to the Reference Cushion, variations between subjects tend to be equalized.

Skin and Patient Reaction tests (H) are conducted simultaneously according to the following protocol.

a. Subject rests in bed 1 hr or more. Initially, an observer examines the buttocks to insure the test begins with no erythema or skin marks. A standard pants configuration (i.e. hospital pajamas) must be used for all tests.

b. Sits up in wheelchair on Reference Cushion 1 hr (check skin for safety only).

c. Sits on Test Cushion, 2 hrs. During this period, the patient is to compare his sensations to those on the Reference Cushion. At the end, of this combined 3 hr seating period, the observer examines skin and records as below.

d. Sits on Reference Cushion 30 min to recheck subjective sensation against Test Cushion, then completes patient evaluation of cushion as below. Patient is instructed to continue normal seated activities during the test session.

FIGURE 7
Sensors used in the study: a) thermocouple; b) heat flux sensor; c) exploded view of Humidial humidity sensor - foam ring, Humidial disk, filter disk, foam ring; d) electrohumidity sensor; e) electrohumidity sensor in protective housing.

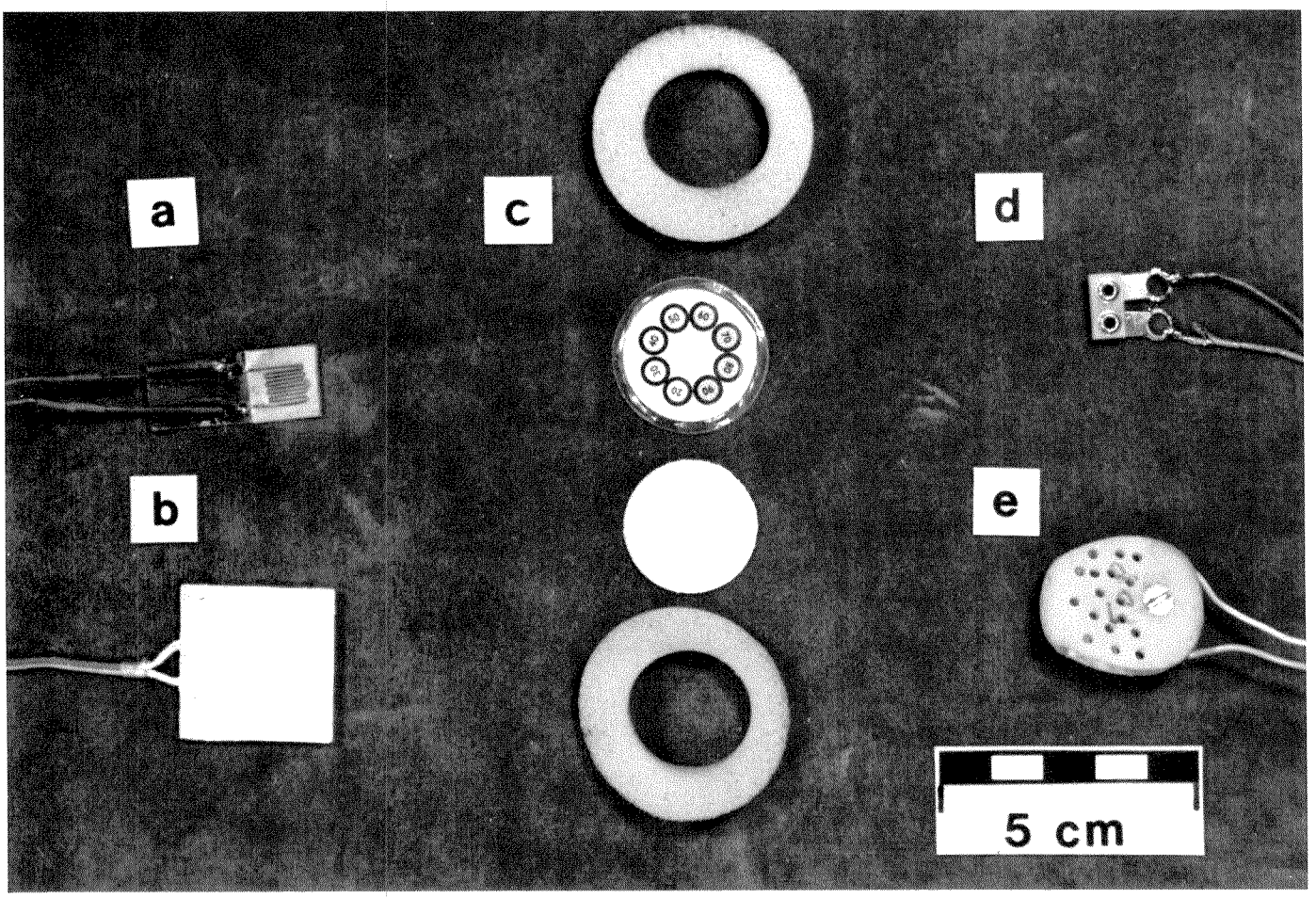

H-1. Patient Skin Reaction: Score System for Observer—

(Score refers to "worst" areas noted over entire seat contact.)

5 — No erythema, blanching in few minutes (the "best case")
4 — slight erythema, disappears spontaneously within 10 minutes
3 — mild persistent erythema that fades within 15 minutes, and blanches easily with digital pressure
2 — moderate erythema, requires more than 15 minutes to fade
1 — severe, non-blanching edema

Warning: discontinue further tests of this cushion with same patient if score is 2 or less.

H-2. Patient's Evaluation: Score System for Subject—

While sitting on the cushion, the patient should review mentally the following factors; he should then examine and handle it after the test. The factors are:

a. sensation of pressure or discomfort while sitting;
b. sensation of stability;
c. sensation of moisture and temperature;
d. estimate of ease of handling and cleaning;
e. overall comfort and convenience.

Following the test, the patient rates the cushion for each of the above factors according to the following score system:

5 — much better than Reference.
4 — slightly better than Reference.
3 — same as Reference.
2 — not quite as good as Reference.
1 — much worse than Reference.

Results are added to form a point score for comparison to the Reference; maximum possible score is 25, versus a standard Reference Cushion score defined at 15. The Reference Cushion also should be scored by the subject, when it is presented on a separate occasion as an unknown, to validate the defined score.

Rationale (Program H). Erythema after sitting is a crude indicator of adverse cushion conditions, even though it may not be possible to identify the specific offending factor. Because of the nature of skin erythema, these tests present difficulties related first to subject sensitivity and second to evaluation. Subjects vary with regard to sensitivity; it is well to select subjects who demonstrate a grade 3–4 reaction when sitting 3 hours on the Reference Cushion, to insure an adequate range of responses. With regard to evaluation, there can be considerable subjectivity on the part of the observer. (Thermography could be introduced as an optional evaluatory tool to increase sensitivity, accuracy, and range of information available from this test.)

Patient acceptance of a cushion is a key factor in its success. No matter how effective a cushion may be, it will not prevent pressure sores if it is not used. These tests aim to give a rough approximation of patient acceptance. Because all results are normalized against the mean patient rating for the Reference Cushion, the Reference Cushion can be tested among other cushions as an unknown so its score can provide a correction factor.

Summary (Program H)

Test: Clin. H-1, Patient Skin Reaction

Mean Reference Cushion Score (3 selected subjects)	: 4.5
Preferred Range of Values	: 4–5
Preferred Performance Factor	: 0.8–1 (higher better)

Test: Clin. H-2, Patient's Evaluation

Reference Cushion	: 15.00 points
Acceptable Score Range	: 10–25
Acceptable Performance Factor	0.7–1.7 (higher better)

RESULTS

In this series, 24 commercially available cushions (including the Reference) were tested using the protocol already described. Mean results for the Reference Cushion are reported in Table 3 representing the actual test results on this cushion. A list of all cushions tested is given in Table 4.

For the entire series, 11 cushions were classified as foams and 2 as "memory" or viscoelastic foams. Several of the foams did not have covers and were tested (as was the Reference) with a thin, loose cover of cotton jersey. Five cushions were classified as gels, and four as "fluid floatation" including various water, air, and foam combinations. Also, two special cushions that were tested could not be placed in a general category and were not adaptable to all tests.

Overall results of the 24-cushion series are summarized in Table 9. Each test is listed together with the result for the Reference Cushion, an estimated, preferred range of Performance Factors, and ranges of results for each category of cushion.

An Evaluation Report representative of a better cushion from each category is shown in Tables 5–8 (it is emphasized that the numerical results given in these four tables are not those of any specific cushions). Individual data and reports for each of the 24 cushions tested are beyond the scope of this paper, but have been submitted to the VA Prosthetics Center.

For this series, major deviations from the above recommended test protocol occurred in two instances. First, results given for interface pressure measurements were obtained in tests using an array of 5 Kulite miniature diaphragm transducers on one buttock and a Scimedics Air Cell transducer on the other, as described in greater detail in a separate paper (11). Also, results given for thermal factors were obtained during a 60 minute test period instead of the 90 minutes which was recommended following experience from further studies (7).

TABLE 3: BASELINE TEST DATA AND EVALUATION REPORT FOR THE **REFERENCE CUSHION**

Name of Cushion: Reference Cushion: Rogers Type REJ 1836
Manufacturer: Rogers Foam Corp.
Description: Dimensions —4"x16"x16" Weight 1 lb. 4 oz.
Outer Cover — none: used loose stretch cotton polyester for reference values.
Inner Cover — a. none b._____
Core Materials — polyether foam, homogeneous, open cell

Note: By definition: Performance Factor = 1.00 for each Reference Cushion result.

Laboratory Tests	Results
A-1 Vertical Spring Char. (non-linear @ 85%)	0.49
A-2 Bottoming Resistance	10.0%
B-1 Damping Ratio (oscillation 0.5-1 sec)	0.44
C-1 10 min Creep	1.4%
C-2 10 min Press. Rise (stabilized)	9.2%
C-3 10 min Recovery	98.7%
D-1 Envelopment Quality	7.0 pts.
E-1 Horizontal Spring Char. (linear)	0.42 mm

Clinical Tests	Results
F-1 Interface Pressure	67 mmHg
G-1 Skin Temp. Change (60 min)	(+) 3.5 deg. C
G-2 Heat Flux Change (60 min)	(-) 16 kcal/m^2·hr
G-3 Humidity (60 min)	40-45%
H-1 Skin Reaction	4.5 pts.
H-2 Patient's Eval.	15.0 pts. [a]

[a] As "unknown", Ref. Cushion received score of 18.25. (P.F. = 1.2).

Negative Aspects Pressure and load-deflection curves indicate sharp increase in slope (bottoming) at approximately 85% deflection associated with a relatively low Bottoming Resistance. Horizontal Spring Characteristic is high (stiff to shear). Damping Ratio is only moderate. Heat Flux is low resulting in a rapid, significant skin temperature rise.

Positive Aspects Cushion has limited, but definite creep and good recovery after loading. Excellent envelopment properties with a perfect score of (10) if no cover whatever is used. Sitting pressures are low compared to most cushions. Humidity increase is lower than on most cushions. Zero or minimal skin reactions are seen and the patient's evaluation of the cushion was moderately good. Given as an unknown, the patient's score agrees well with the arbitrarily assigned score used as the basis for the P.F. on the patient evaluations.

Overall Evaluation and Recommendations The foam Reference Cushion is light, inexpensive and is representative of a routine choice that might be made for a good quality cushion material if no special requirements are stipulated. On an overall basis, it compares favorably to other cushions on most points. On a few negative aspects, it represents what should probably be minimum standards for a cushion; on other tests, it displays intermediate or superior performance. For critical use, assessment, fitting and adjustment by trained personnel on a prescription basis should be required.

DISCUSSION

Design of Laboratory and Clinical Tests

Devising a test protocol for wheelchair cushions presents a difficult problem. While it was convenient to use existing ASTM standards for foams as a starting point (12) (13), it was apparent that in dealing with a wide variety of cushions, there were many aspects that these tests cannot cover. For example, using a 50 in^2 disk at 65 percent deflection on foam, the pressures developed beneath the disk are far lower than any developed during sitting; on the other hand, excessive forces are required to produce the same deflection in a gel. Thus, in developing the test programs, the approach was intuitive and empirical. First, important characteristics of cushions were identified, then tests were devised to define these qualities using proven techniques or prior work as a basis whenever possible. (Unfortunately, because few prior studies are available that are applicable to testing of finished cushions, much of this work was started from scratch on a trial-and-error basis.)

The choice of indentors is a good example of this approach. Dead weight loading was selected for convenience and to demonstrate effects of creep. To achieve adequate pressures within a reasonable loading range, indentor size had to be relatively small; actually, the indentor area corresponds roughly with the area of high pressure present beneath an ischial tuberosity during sitting. To achieve good data on indentation the unit had to be relatively flat, but to avoid cushion damage the edges required rounding, and a slight curvature was necessary on the face of the flat indentor to

TABLE 4. — List of Cushions Tested in Current Series[1]

	Company	Model	Brief Description
Foam Type	Bio Clinic	"egg-crate"	contoured polyurethane
	Everest & Jennings	Tri-Pad	tri-layer, low density inlays
	Rogers Foam	1834	very low density polyether
	Rogers Foam	1836	low density polyether (REFERENCE CUSHION)
	Rogers Foam	2330/3040	bilayer, low/med. density polyether
	Rogers Foam	2330/3040	bilayer (bottom scored) low/med. density polyether
	Scimedics	Laminaire	bilayer, high/extra high density polyurethane
	Scimedics	Stress Relieved	high density (split-treated) polyurethane
	Talley/Scimedics	Posture-Foam	high density with ischial cut-out
	unknown	brown	bilayer (cored) very low/high density polyurethane
	unknown	blue	bilayer (cored) low/high density polyurethane
Viscoelastic Foam	AliMed	164-S	low-density polyurethane "T-Foam"
	AliMed	164-M	med. density polyurethane "T-Foam"
Gel Type	Action Prod.	Elastomeric	elastomer floatation
	BioClinic	Gel #7516	gel floatation
	Everest & Jennings	WC-17	Spenco — globular gel emulsion
	Stryker	1540-2	gel floatation
	3-M	Reston	liquid/microcell sponge floatation
Fluid Floatation	Bio Clinic	Rear Gard #9618	viscous fluid
	Bio Clinic	Bio Flote #3717	water/foam/air
	Lumex	Aqua-Ease #1230	water/foam/air
	Medpro	"Floatation"	water filled plus air-ring
Special	Nord. Droge	Decubitex	Styrofoam bead filled
	RoHo	"Balloon"	multiple air bladder (tufts)

[1]Descriptive nomenclature is from manufacturer's literature.

TABLE 5. — EVALUATION REPORT FOR A TYPICAL FOAM TYPE CUSHION

Name of Cushion— _ _ _ _ Manufacturer _ _ _ _ _

Description:	Dimensions -	3"x16"x16" Weight 2 lbs. 3 oz.
	Outer Cover -	stretch polyester, tight
	Inner Cover	a. none b. _____
	Core materials -	High density polyurethane, open cell foam, split into two separate layers of equal thickness.

RESULTS

All results expressed as "Performance Factor"; (test value/Reference Cushion result). To determine raw test results, multiply the Performance Factor for the cushion tested by the Reference Cushion result.

Laboratory Tests	Performance Factors
A-1 Vertical Spring Char. (non-linear @ 79%)	2.22
A-2 Bottoming Factor	2.11
B-1 Damping Ratio (oscillation 0.5-1 sec)	1.31
C-1 10 min creep	1.24
C-2 10 min press. rise (stabilized)	0.31
C-3 10 min recovery	0.98
D-1 Envelopment Qualities	0.68
E-1 Horizontal Spring Char. (linear)	0.38
Clinical Tests	**Performance Factors**
F-1 Interface Pressure	1.22
G-1 Skin Temp. Change (60 min)	0.82
G-2 Heat Flux Change (60 min)	0.18
G-3 Humidity (60 min)	1.00
H-1 Skin Reaction[a]	0.95
H-2 Patient's Eval.[a]	0.84

[a]data limited

Negative Aspects Relatively high horizontal spring characteristic will increase shear stresses. Cover tight with consequent reduction in performance in envelopment and possibly sitting pressure, although results in these tests remain in favorable ranges. As with most foams, the cushion is relatively inefficient in controlling skin temperature, but is within acceptable limits.

Positive Aspects All other tests in acceptable ranges.

Overall Evaluation and Recommendations This cushion gave good results in nearly all tests. Its only negative characteristic is the high resistance to horizontal deformation. It has good bottoming and creep characteristics. Clinical tests are roughly equivalent to the Reference Cushion although results are slightly lower. Satisfactory for general use. May benefit from a cover with more stretch and/or slack. Envelopment properties were improved to P.F. 1.00 when tested with no cover.

Note: This cushion demonstrated better scores on most tests than the average foam cushion tested. Nevertheless, for critical use, assessment, fitting, and adjustment by trained personnel on a prescription basis should be required.

achieve reliable pressure readings at the center. In contrast, a protruding shape had to be devised for the envelopment test indentor that could allow 100 percent envelopment on the best cushion, but adequately test others.

For monitoring pressures, all measurements ideally should be made at the top surface of the cushion by a transducer in the indentor — but measurements at this site presented many technical problems. Consequently, for this study, it was necessary to compromise and measure pressures beneath the cushions because shear forces and discontinuities in the materials caused poor reproducibility in measurements made at the top. At the bottom surface, these problems could be minimized effectively by covering the flush-mounted transducers with a thin sheet of leather. (Pressures measured beneath cushions tend to be about one-half the pressures on the top surface until bottoming and equalization occurs.)

For the future, accurate top surface measurements could be made by placing the transducer in a recess in the indentor, with pressure transmitted through a membrane-enclosed fluid.

Similar problems were encountered in the clinical tests. For example, there are many variables related to interface pressure measurements, and the meaning of these measurements in terms of actual tissue pressures is difficult to define. A series of tests have shown that measurements made with the Scimedics Air Cell Transducer give results similar to those obtained with an array of Kulite miniature, electronic, diaphragm pressure transducers. For extensive testing, the Scimedics unit was chosen because it is easier to use. Nevertheless, these measurements, at best have value only as an index relating one cushion to other cushions.

The problems related to pressure measurments are dealt with in more detail elsewhere by the authors (10) (11).

Also, it should be noted that use of the VA "barograph" in this program was limited to identifying locations of the high pressure zones of each subject, to aid in transducer placement; this device based on a design originated by Elftman (14) to generate footprint patterns, was not used with cushions or for any quantitative pressure assessments.

For the thermal measurements, results for 60 minute tests are given throughout this report, but a 90-minute interval is specified for the test program and is recommended for future use, based on additional work accomplished in this laboratory (7).

These comments are typical of the problems encountered in all the test programs which were solved by experimental trial and error. An infinite number of variations on the apparatus and programs were considered, but each in turn generated its own set of advantages and disadvantages. Eventually, it became necessary to select a series of tests and complete them, with standardization afforded by recourse to the Reference Cushion.

TABLE 6: EVALUATION REPORT FOR A TYPICAL "**VISCOELASTIC FOAM" CUSHION**

Name of Cushion — _____ Manufacturer _____

Description: Dimensions — 3"x16"x18" Weight 3 lb 3 oz

Outer Cover — Stretch polyester, a soft fairly loose, apparently 2-way-stretch material.

Inner Cover — a. none b. none

Core materials — Viscoelastic polyurethane foam

RESULTS

All results expressed as "Performance Factor"; test value/Reference Cushion result. To determine raw test result, multiply the Performance Factor for the cushion tested by the Reference Cushion result.

Laboratory Tests	Performance Factors
A-1 Vertical Spring Char. (non-linear @ 71%)	1.36
A-2 Bottoming Resistance	1.69
B-1 Damping Ratio (oscillation 0.5-1 sec)	2.31
C-1 10 min. creep	12.19
C-2 10 min. press. rise (not stabilized)	1.39
C-3 10 min. recovery	0.97
D-1 Envelopment Quality	1.12
E-1 Horizontal Spring Char. (linear)	1.02
Clinical Tests	**Performance Factors**
F-1 Interface Pressure	1.18
G-1 Skin Temp. Change (60 min)	0.88
G-2 Heat Flux Change (60 min)	0.51
G-3 Humidity (60 min)	1.10
H-1 Skin Reaction[a]	0.87
H-2 Patient's Evaluation[a]	0.94

[a] Data limited

Negative Aspects Relatively soft VSC with some bottoming tendency. Creep may be excessive and there is a continuing tendency for pressure to increase under load. Resistance to horizontal movement is relatively high as is skin reaction (limited data).

Positive Aspects Excellent damping qualities against sudden movement. Excellent envelopment qualities. Sitting pressure and other clinical test factors (with exception of skin reaction) compare favorably to the Reference Cushion.

Overall Evaluation and Recommendations Generally satisfactory cushion for routine non-critical use on patients who do not have skin in real danger of necrosis. This reservation is suggested by the tendency for pressure to increase slowly with time as well as the low heat flux and tendency to increase temperature. Cushion selection for patient weight is critical for these cushions. An improved viscoelastic foam cushion might be engineered with an additional layer to prevent the delayed bottoming problem. For critical use, assessment, fitting and adjustment by trained personnel on a prescription basis should be required.

TABLE 7: EVALUATION REPORT FOR A TYPICAL **GEL TYPE CUSHION**

Name of Cushion — _____ Manufacturer _____

Description: Dimensions — 1½"x16"x16" Weight 11 lb 8 oz

Outer Cover — Cotton knit fabric, loose and removable, no carry case

Inner Cover — a. 5-mil polyurethane Film

b. Cotton Knit Fabric

Core materials — a semisolid gel-like material

RESULTS

All results expressed as "Performance Factor"; test value/Reference Cushion result. To determine raw test result, multiply the Performance Factor for the cushion tested by the Reference Cushion result.

Laboratory Tests	Performance Factors
A-1 Vertical Spring Char. (linear)	1.85
A-2 Bottoming Resistance	3.93
B-1 Damping Ratio (oscillation 0.5-1 sec)	1.35
C-1 10 min. Creep	0.94
C-2 10 min. Press. Rise (stabilized)	0.27
C-3 10 min. Recovery	0.88
D-1 Envelopment Quality	0.77
E-1 Horizontal Spring Char. (linear)	6.54
Clinical Tests	**Performance Factors**
F-1 Interface Pressure	1.37
G-1 Skin Temp. Change (60 min)	(-)0.06
G-2 Heat Flux Change (60 min)	(-)2.40
G-3 Humidity (60 min)	1.65
H-1 Skin Reaction[a]	1.05
H-2 Patient's Evaluation[a]	0.72

[a] Data limited

Negative Aspects High sitting pressure is characteristic of gel type cushions, but this cushion is relatively low for the group. High humidity, related to inner polyurethane film. Heavy and high costs as typical of gel cushions, but weight is at low end of range for this group.

Positive Aspects Good VSC with linear response, excellent bottoming resistance and damping characteristics. Excellent skin temperature maintenance qualities due to high heat flux. Very good compliance to horizontal movement (HSC). Excellent soft stretchable cover that is easily changed.

Overall Evaluation and Recommendations A satisfactory cushion, particularly for those benefited by heat reduction and very high horizontal compliance and for whom higher cost and weight are acceptable. Engineering to reduce inherently high sitting pressures of gel cushions and improving humidity control and envelopment is required. This might be accomplished by adding a 1 inch disposable top layer of a suitable open cell foam.

Note: This cushion demonstrated higher Performance Factors on most tests than the average gel-type cushion tested. Nevertheless (for critical use) assessment, fitting, and adjustment by trained personnel on a prescription basis should be required.

One problem relating to the logistics of patient tests remained unsolved. For these programs, it is essential to identify patients with relatively sensitive skin who are available in a controlled clinical environment, and are cooperative and reliable observers. If from 3 to 6 patients are available and involved in testing a large series of cushions, it is a full time job for one technician to control the study, even for three-hour tests. A severe problem was encountered adjusting the schedules of patients and technicians who were not part of the spinal cord units. In our series, patient data is listed as limited because even in this very short term study, the difficulties in control were such that only 3 of 6 subjects completed their trials on most of the 24 cushions. Much is heard about the need for extended clinical trials, but this may not be practical for a large sample of cushions unless an

extensive population of patients is under direct control of a research-oriented staff.

Thermography could add to the quality and sensitivity of clinical data if inserted in the test protocol to gauge overall patient tissue reaction after the 3-hour sitting period, but the added cost in equipment and trained personnel would be great (3).

Initially, it was the intent that the Clinical Tests would serve also to validate the Laboratory Tests and aid in establishing preferred values of results. Unfortunately, it became apparent that more extensive clinical study would be required for that purpose. Because of difficulties with control of the subjects and data collection, the data accumulated were too limited, although, technically, the procedures appeared to be workable and satisfactory. Thus, there is considerable uncertainty concerning the actual clinical importance of each parameter measured.

If standards for cushions eventually are to be established, what weight should be given to each test? A preferred range of results for each test has been given here — on a trial basis — taking into account the performance of the Reference Cushion and the range of values produced on the 24-cushion test sample, but these initial estimates require further clinical validation.

Practical Applications In Cushion Selection

At this stage, several practical applications for the Cushion Evaluation Reports exist if utilized by personnel familiar with the problems of seating. For individuals with the background to

TABLE 8: EVALUATION REPORT FOR A TYPICAL **FLUID FLOATATION TYPE CUSHION**

Name of Cushion — — — — — — — — — Manufacturer — — — — —

Description: Dimensions — 2¼"x16"x16" Weight 9 lb (H20 filled)

Outer Cover — Coarse non-stretch cotton polyester, removable. Handles.

Inner Cover — a. Vinyl b. ____

Core materials — foam, H_2O, air

RESULTS

All results expressed as "Performance Factor"; test value/Reference Cushion result. To determine raw test result, multiply the Performance Factor for the cushion tested by the Reference Cushion result.

Laboratory Tests	Performance Factors
A-1 Vertical Spring Char. (non-linerar @ 65%)	1.86
A-2 Bottoming Resistance	1.03
B-1 Damping Ratio (oscillation 0.5-1sec)	0.83
C-1 10 min Creep	2.34
C-2 10 min Press. Rise (stabilized)	0.81
C-3 10 min. Recovery	0.73
D-1 Envelopment Quality	0.27
E-1 Horizontal Spring Char. (linear)	0.82
Clinical Tests	**Performance Factors**
F-1 Interface Pressure	1.17
G-1 Skin Temp. Change (60 min)	(-)0.42
G-2 Heat Flux Change (60 min)	(-)3.15
G-3 Humidity	1.5
H-1 Skin Reaction[a]	1.05
H-2 Patient's Eval.[a]	0.74

[a] Data limited

Negative Aspects Low bottoming resistance. Poor envelopment quality. Very high heat flux and temperature reduction may bother some patients with sensation of cold. Relatively high humidity. Low recovery from creep. Heavy, and requires adjustment of fluid content — not foolproof.

Positive Aspects May have some therapeutic value in reduction of skin temperatures.

Overall Evaluation and Recommendations Generally acceptable cushion for non-critical use on patients who feel comfortable on a water cushion (or particularly desire one) and can tolerate or benefit from the temperature lowering effect and relative instability. Improved covering layer might aid performance. Bottoming resistance in clinical use probably is adequate if properly filled for patient weight and configuration.

For critical use—assessment, fitting, and adjustment by trained personnel on a prescription basis should be required.

add a critical interpretation, the reports can aid in selection of suitable cushions in each category for volume purchases by institutions.

Next, the results make cushion prescriptions possible for patients with difficult clinical problems; here each test should be considered as having a special meaning relative to the condition of the patient. In other words, some individuals may be vulnerable to particular aspects and thus require a higher Performance Factor on some tests than on others. Individual test reports should be considered critically in making the choice and could become the basis for cushion prescriptions. In the future, as more knowledge is accumulated and technology improves, the now generous preferred range of Performance Factors could be made narrower. Also, a profile of Performance Factor values to provide an optimum cushion for different types of patients might be established.

The Needs of Patients With Critical Skin Problems

At present, custom fitting of patients with cushions by "tissue pressure teams" mainly involves production of molded seats or cutting and fitting of cushion materials with control by interface pressure measurements. It is emphasized that this job should be extended to add custom selection of cushions and components with regard for mechanical, biophysical and other properties discussed in this paper. No commercial cushion exists that should be utilized "as is" for patients with critical skin problems, without an informed prescription by trained personnel who can assess factors relating to fitting, covering materials, support surfaces and other parameters and make any necessary adjustments. Comparative pressure measurements with interface transducers may be a useful tool in this process (11).

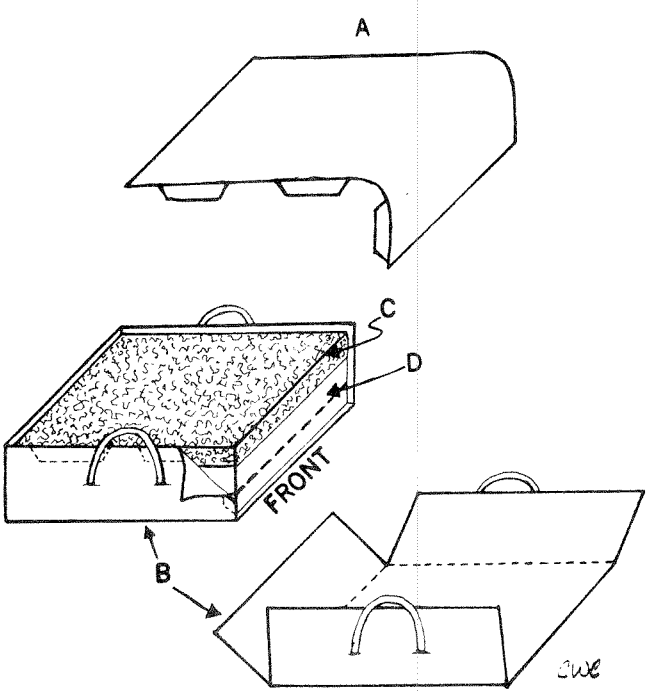

Prospects For Better Cushions

Lastly, this test protocol could be of value in identifying the major deficiencies that exist in many commercial cushions and in generating competitive incentives to influence manufacturers to correct or improve the defects. In many instances the worst faults, such as poor covers, can be alleviated by relatively simple measures.

This investigation has indicated that there is no single perfect material for a cushion. Materials excellent in one property often are inherently deficient in another. Short of the creation of exotic new materials, it seems obvious that one answer is to employ well chosen layers of different materials. For example, the gels have many excellent properties but are heavy, expensive, and tend to be associated with higher pressures and humidity. Adding a disposable top layer of reticulated foam to a gel cushion could improve air circulation. Similarly, a soft viscoelastic foam has many advantages, but with the disadvantage of possibly bottoming-out if used alone. Adding a relatively thin layer of gel above the viscoelastic foam could reduce shear, protect from bottoming and reduce heat build-up while the bottom layer of viscoelastic foam improved conformity and reduced pressures.

A new 3-layer design for a 3-4 in. thick cushion is proposed in Figure 8. The top layer of reticulated foam, which is intended to improve envelopment and air circulation, can be discarded easily and replaced — daily if necessary — for cleanliness. The center (gel) and bottom (viscoelastic foam) components would add the properties mentioned earlier; these layers should be placed together in a sealed, loose, plastic pouch, to permit ease of cleaning. Chow et al. (15) have recommended reduction of shear by lubrication between layers; this technique also might be employed within this sealed envelope, provided stability could be maintained. The outer cover is designed to be strong on sides, bottom, and back to permit carrying, but the seating surface and front are constructed of 2-way stretch cotton-polyester material and are not tight (this part is removable and additional pieces could be supplied with the cushion to facilitate cleaning).

The Role of Clothing in Cushion Performance

Finally, for testing or clinical use of all cushions, clothing must not be forgotten. The patient's clothing can act as an additional cover detracting from the favorable qualities of any cushion, while the possibility of high stress gradients from ridges, creases and heavy seams represents an ever-present hazard.

FIGURE 8.
Diagram of proposed tri-layer cushion. Part A is an expendable loose cover of 2-way-stretch material. It covers the top (the seating surface) and front, and attaches with Velcro tabs to part B, which is the remainder of the cover or carrying package. The package is 16 inches by 16 inches by 3-to-4 inches. Part C is a disposable top layer of reticulated foam, 1 inch thick. Part D is a loose sealed pouch containing the cushion's center layer, of gel 1-to-2 inches thick, and a bottom layer of viscoelastic foam 1-to-2 inches thick.

TABLE 9. — Overall Results for Twenty-Four Cushions

				LABORATORY TESTS		
	Lab A-1 VSC (slope)	A-2 Bottom Resist.	B-1 Damp. Ratio	C-1 10 min. Creep	C-2 10 min. Press. Rise	C3 10 min. Recov.
BASELINE DATA						
Reference Cushion Result	0.49	10%	0.44	1.4%	9.2%	98.7%
Reference Cushion Perform. Factor	1.00	1.00	1.00	1.00	1.00	1.00
Preferred Range of Perform. Factor	0.9-3.6	0.9-4	0.8-2	1-8	0-1.5	0.9-1
Best Perform. Factor	intermed.	higher	higher	lower	lower	higher
TEST RESULTS						
Foam Type Cushions (11)						
Mean Perform. Factor	1.86	1.66	1.21	1.22	0.71	0.99
Range of Perform. Factor	0.82-2.71	0.77-3.01	0.16-1.87	0.74-1.71	0.15-1.55	0.95-1.01
Viscoelastic Foam Cushions (2)						
Mean Perform. Factor	1.18	1.40	2.16	8.11	1.74	0.98
Range of Perform. Factor	0.98-1.37	1.08-1.71	1.99-2.33	4.00-12.21	1.41-2.06	0.98
Gel Type Cushions (5)						
Mean Perform. Factor	2.48	2.49	1.10	1.67	0.63	0.91
Range of Perform. Factor	1.69 3.51	1.27-3.95	0.74-1.36	0.57-5.14	0.16-1.45	0.85-0.97
Fluid Floatation Cushions (4)						
Mean Perform. Factor	1.47	1.18	0.79	2.38	3.00	0.91
Range of Perform. Factor	0.86-1.88	0.60-1.94	0.37-1.16	1.93-2.86	0.83-6.6	0.71-1.01
Special Cushions (2)						
Mean Perform Factor		NA	NA	NA	NA	NA
Range of Perform. Factor						
Mean All Cushions	1.83	1.79	1.19	2.17	1.22	0.95
Range of Perform. Factor	0.82-3.51	0.60-3.95	0.16-2.33	0.57-12.21	0.15-6.60	0.71-1.01

CLINICAL TESTS

D-1 Envelop. Qual.	E-1 HSC	Clin. F-1 Lab Intf. Press.	G-1 Δ Skin Temp.	G-2 Δ Heat Flux	G-3 Humid. (R.H.)	H-1 Patient Skin R.	H-2 Patient's Eval.
7 pts 1.00 C.7-1.4 higher	0.42 mm 1.00 1-10 intermed.	67 mmHg 1.00 0-1.4 lower	+3.5 C 1.00 0-(±)0.6 lower/negative	(−)16 kcal/m²·hr 1.00 0-(−)2.5 Intermed./neg.	40% 1.00 1-1.5 lower	4.5 pts 1.00 0.8-1 higher	15 points 1.00 0.7-1.7 higher
0.89 0.57- 1.28	0.94 0.22- 2.07	1.14 0.95- 1.39	0.97 0.77- 1.27	0.61 0.19- 1.00	1.15 1.00- 1.63	0.93 0.78- 1.04	1.03 0.67- 1.22
1.22 1.14- 1.29	1.46 1.03- 1.89	1.10 1.04- 1.16	0.79 0.68 0.90	0.35 0.19- 0.50	1.06 1.00- 1.13	0.89 0.89	0.88 0.80- 0.96
0.64 0.36- 0.79	6.05 3.34- 12.8	1.39 1.15- 1.52	(-) 0.10 (-) 0.03- (-) 0.23	(-) 2.5 (-) 1.88- (-) 3.19	1.53 1.25- 1.63	0.99 0.96- 1.04	0.77 0.64- 1.08
0.31 0.29- 0.36	2.18 0.84- 4.32	1.07 0.98- 1.19	(-) 0.55 (-) 0.01- (-) 1.23	(-) 3.38 (-) 2.38 (-) 4.06	1.53 1.38- 1.88	1.02 0.96- 1.04	0.75 0.68- 0.78
0.71 0.71	NA	1.15 0.93- 1.37	0.58 0.40- 0.76	0.35 (-) 0.31- (+) 1.00	1.5 1.38- 1.63	0.97 0.89- 1.04	0.77 0.67- 0.86
0.75 0.29- 1.29	2.45 0.22- 12.79	1.18 0.93- 1.52	0.45 (-) 1.23- (+) 1.27	(-) 0.75 (-) 4.06 (+) 1.00	1.31 1.00 1.88	0.96 0.78- 1.04	0.96 0.64 1.22

It is recommended that for critical patients, special pants or slacks be supplied, with a seat consisting of the appropriate cotton-synthetic stretch material in a loose but not baggy configuration.

SUMMARY AND CONCLUSIONS

1. A comprehensive approach to testing of wheelchair cushions has been devised and a detailed test protocol has been presented together with estimated preferred ranges for test results that are based on the limited experience to date. Further clinical work is needed to determine the actual practical importance of each test parameter.
2. This test protocol has been utilized on a series of 24 commercial cushions in four categories: foam type, "viscoelastic foam", gel type, and "fluid floatation", as well as two special types.
3. Mean results for the major categories are given, together with a sample Cushion Evaluation Report typical of each category. Results cannot be used to rank cushions on a overall basis. Instead, performance on each test is given along with negative and positive aspects and an overall evaluation. Needed improvements as well as patient groups for which the cushion is most suited are specified where appropriate. Any patient with a critical skin problem requires assessment and cushion prescription by trained personnel.
4. Negative aspects of many commercially available cushions can be reduced by relatively simple modifications using a component approach.The most successful non-custom cushion probably will prove to be a layered type in which desired attributes of different component materials can be combined to achieve desired composite qualities. A proposed design of a triple layer cushion with a special cover has been presented.

ACKNOWLEDGMENTS

We are particularly indebted to Dr. William Chow for his valuable input to this project, and to the VA Prosthetics Center for consultation from the Bioengineering Research Service and the assistance of the Evaluation Service at the VA Medical Center, Castle Point, N.Y.

REFERENCES

1. Cochran, George Van B. and Glen Slater: Experimental Evaluation of Wheelchair Cushions: Report of a Pilot Study. Bull. Prosth. Res. 10-20: 29–61, Fall 1973.
2. Chow, William W.: Mechanical Properties of Gels and Other Materials With Respect to Their Use in Pads Transmitting Forces to the Human Body.Technical Report No. 13, The University of Michigan, 1974.
3. Trandel, Richard S.: Instrument Design, Application, and Investigational Analysis of the External Factors, Pressure, Humidity, and Temperature in the Pathogenesis of Decubitus Ulcers. Ph. D. Dissertation, University of Virginia, 1974.
4. Trandel, Richard S. and David W. Lewis: A Small, Pliable, Humidity Sensor, With Special Reference to the Prevention of Decubitus Ulcers. J. Am. Geriatr. Soc. 23(7):322–326, July 1975.
5. Brattgå., S. Carlsöö, and K. Severinson: Temperature and Humidity *in* the Sitting Area. 185-188, *in* Kenedi, R.M.,Cowden, J.M.,(eds.) Bedsore Biomechanics. Baltimore, Maryland, University Park Press, 1976.
6. Fisher, Stephen V., Thomas E Szymke, Sunanda Y. Apte, and Michael Kosiak: Wheelchair Cushion Effects on Skin Temperature. Arch. Phys. Med. Rehab. 59(2):68–72, Feb 1978.
7. Stewart, Sandy F.C., Vincent R. Palmieri, and George Van B Cochran: Wheelchair Cushion Effect on Skin Temperature, Heat Flux, and Relative Humidity, Arch. Phys. Med. Rehab. 61:229–233, 1980.
8. Ferguson-Pell, Martin W., Frank Bell, and John H. Evans: Interface Pressure Sensors: Existing Devices, Their Suitability and Limitations. 189-198 *in* Kenedi, R.M., Cowden, J.M., (eds.) Bedsore Biomechanics, University Park Press, Baltimore, Maryland 1976.
9. Ferguson-Pell, Martin W.: Critical Assessment of the Effects of Pressure With Special Reference to the Development of Pressure-Sores. Ph.D. Thesis (Bioengineering) University of Strathclyde, Glasgow, Scotland 1977.
10. Cochran, George Van B.: Tissue Pressure Management for the Severely Disabled. Minicourse (handout) 55th Annual Session, American Congress of Rehabilitation Medicine, New Orleans, 1978
11. Palmieri, Vincent R., Gary Haelen, and George Van B. Cochran: A Comparison of Sitting Pressures on Wheelchair Cushions as Measured by "Air Cell" Transducers and Miniature Electronic Pressure Transducers. Bull. Prosth. Res., BPR 10-33, Spring 1980.
12. American Society for Testing and Materials, Standard Specifications and Test for Latex Foam Rubbers, ATSM Designation: D 1055–69.
13. American Society for Testing and Materials, Standard Methods of Testing Slab Flexible Urethane Foam, ASTM Designation: D 1564–71.
14. Elftman, Herbert: A Cinematic Study of the Distribution of Pressure in the Human Foot. Anatom. Rec., 59(4), 481-491. 1934
15. Chow, William W., Robert C. Juvinall, James L. Cockrell: Effects and Characteristics of Cushion Covering Membranes. *In* Bedsore Biomechanics, 95-102, Kenedi, R.M. Cowden, J.M. (eds.) University Park Press, Baltimore, Maryland 1976.