A Special Controller for the BSR X-10 Adapts an Environmental Control System Intended for the General Public to the Needs of the Severely Handicapped

DAVE RYE
Senior Applications Engineer

BSR (USA) Limited
Route 303, Blauvelt, New York 10913

The BSR System X-10[a] (Fig. 1) is a remote-control system designed primarily as a convenience item for the general public. It allows up to 16 electric lights, appliances, or alarms to be turned on and off, and incandescent lights to be brightened and dimmed, from anywhere in the house. The desired result is achieved by sending a coded series of high-frequency electrical signals over the existing house wiring.

The user pushes the desired key on a Command Console (Fig. 1) which is plugged into any ordinary domestic electrical outlet. The resulting coded signal is recognized by a selected module (Fig. 1) plugged into another ordinary outlet. (That other outlet may be in the next room, or it may be remotely located in the same house or in a neighbor's house or apartment served by the same utility company transformer. Thus a module can be used to signal to or summon help from a neighbor.)

Each light or appliance to be controlled is plugged into one of the modules. Three types are available: a lamp module for incandescent lamps up to 300 watts; an appliance module for appliances using up to 15 amperes (also lamps up to 500 watts); and a wall-switch module for overhead and outside incandescent lights up to 500 watts. Each module has two dial-type switches: a "House Code" switch used to prevent

[a]Trademark of BSR (USA) Limited

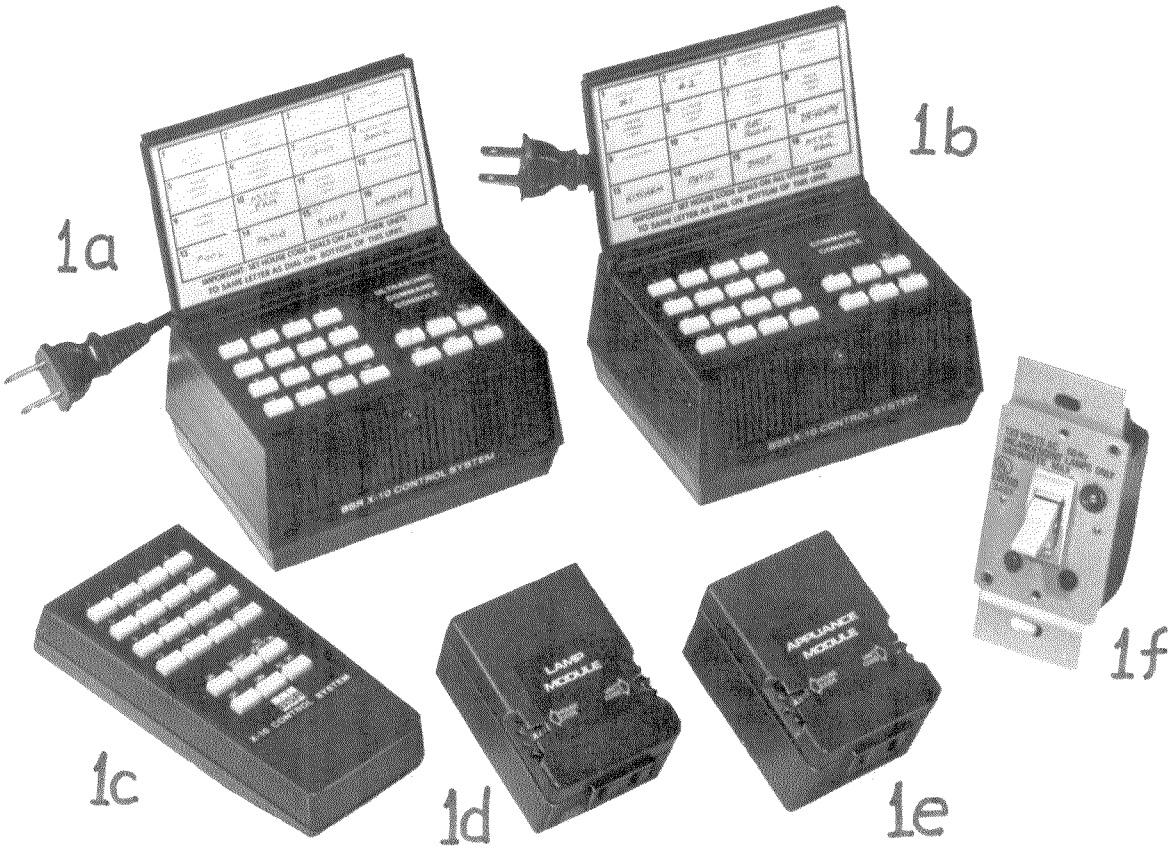

FIGURE 1.
Conventional BSR System X-10 components for the general public offers pushbutton remote control of lights and appliances. 1a. Ultrasonic Command Console. 1b. Command Console. 1c. Cordless Controller to transmit commands to 1a.
1d. is a Lamp Module which receives commands over house wiring from the Command Console to turn on or off, dim or brighten, any incandescent lamp up to 300 watts. 1e is an Appliance Module to turn on or off an appliance (TV, stereo, fan, etc.) up to 15 amperes for resistive load, a 1/3-HP motor, or up to a 500-watt incandescent lamp. The Wall Switch (1f) is used to turn on or off, dim or brighten, an incandescent lamp of up to 500 watts.

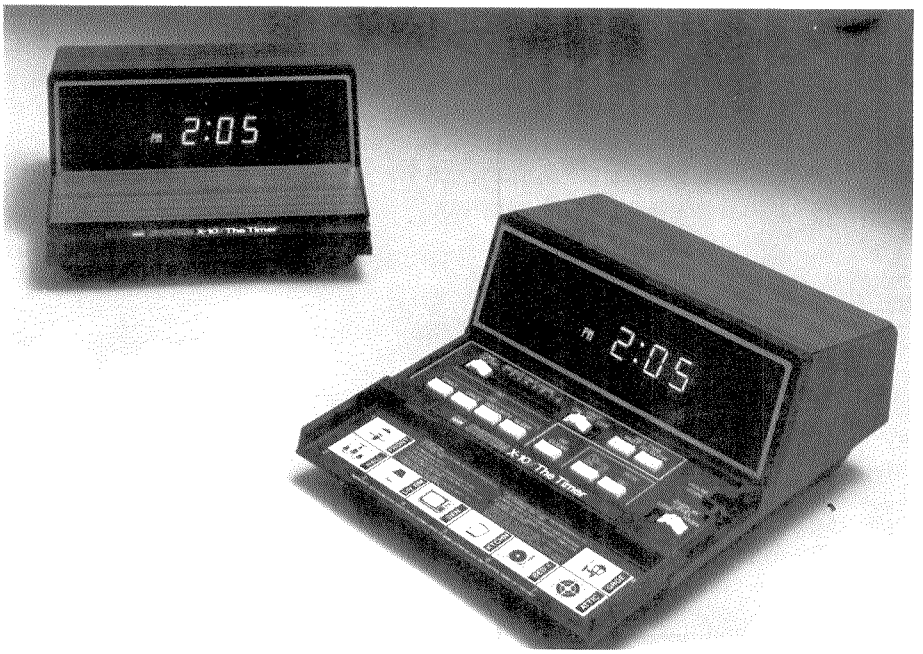

FIGURE 2.
Timer turns lights and appliances on and off automatically up to twice a day. It can control them through the same modules used by a Command Console.

undesired interaction between systems in two houses served by the same utility company transformer; and a switch which selects the Command Console signal code to which that module will respond.

Also available is an Ultrasonic Command Console which can be operated from as much as 30 feet away (on a line-of-sight), using a Cordless Controller which sends out an ultrasonic signal. The ultrasonic version of the console also allows conventional pushbutton control.

A Timer (Fig. 2) is also available. It contains a digital clock, and allows the user to program the time at which he wants a specific light or appliance to go on or off. Up to eight modules can be controlled from the Timer with two "on" times and two "off" times for each of the eight modules. The Timer may be programmed to turn a light or applicance on or off a single time, once or twice on a daily basis, or randomly (within half an hour of a pre-set time) to give a house a "lived in" appearance. The timer also has instantaneous functions. "All lights on" and a "Now" key allowing any of the eight modules to be turned on or off instantly. There is also a "Sleep" key which turns on a module instantly and turns it off one hour later. A display-brightness switch, and a switch to select control of modules 1 to 8, or 9 to 16, are also included.

The equipment sold in the United States is designed for 117-V, 60-Hz, and the standard two-prong plug. Appliance modules that accept 3-prong plugs are also available now. The System X-10 adapted for 220-V, 50-Hz, and with the European two-pin plug, is marketed in Germany by Busch-Jaeger Elektro GmbH.

Either type of Command Console, and the Cordless Controller, are designed to be used by able-bodied persons but can be used by many handicapped people who have some movement of their upper limbs. The Cordless Controller can be mounted on the arm of a wheelchair and operated by pressing the buttons with a mouthstick, as described and illustrated by Schmeisser and Seamone (1).

Low-Force-Control Adaptation—Some high-level quadriplegics, cerebral palsy cases, and persons suffering from arthritis may not be able to select and press the desired button on the Cordless Controller or the Command Console, even with the aid of a mouthstick. For that reason, a special controller has been developed which has scanning logic to replace the keyboard. It can be operated by various low-force (and usually low-excursion) switches.

It is well-known that switches are available which can be operated by using the tongue to lift the switch up or down from a neutral position; or by rocking the head from side to side; or by sipping and puffing on a tube held in the mouth. All of these switches have in common the basic principle that only two operations (from neutral position) are necessary; e.g., up-down, left-right, sip-puff, etc. Two low-force key switches, or an optional plug-in connection to which could be attached a sip-and-puff switch or similar device, would provide a substantial increase in independence for such severely disabled patients.

Some of the basic adjustments and the initial selection of House Code, module number, or other details may require initial adjustment by the rehabilitation engineer or other installer. More frequently required adjustments could be made by a member of the family or other attendant, perhaps in response to changes in the patient's condition or needs. Obviously, installation of the modules and plugging-in of appliances would be done by the installer or family member.

Low-Force Controllers: Two Commercial Versions—Figure 3 shows two models of a special control device with a circuit that allows operation by a severely disabled person using a rocker, sip-puff pneumatic, or other low-force switch. Devices are commercially available from BSR for about $100.

Model 1, the simpler and somewhat less expensive version, can control four numbered modules. One switch action (e.g., sip) repeated, scans successively a group of four light-emitting diodes (LEDs) representing the four modules (and their associated lights or appliances) until the user reaches the desired module. Then the first activation of the other (puff) switch sends the selected House Code and the number code for the desired module, and turns it and the light or appliance plugged into it "on." (A second puff turns that module "off," a third puff turns "on" again, and so forth alternately. This arrangement is useful for control of devices such as motorized beds.)

Model 2 provides more complete control of eight numbered modules. In addition to the alternate on-off control just described, it also allows the user to select a module number, then select from and execute additional functions: "Bright," or "Dim." "All lights on" and "All off" are also available as commands.

Both models will give a tone when scanning returns to number 1, to aid either a blind person or someone in bed who cannot conveniently see the LEDs. The user can then mentally count sips while scanning higher numbers (and functions, in the case of Model 2).

Either model is fitted into a standard System X-10 Command Console box. A socket on the back receives the DIN-standard plug of the BSR rocker switch: no push-buttons are provided.

With the growing use of a wide variety of controls for severely disabled patients from different sources, standardization of the sockets, voltages, polarities, coding, etc., is increasingly important. The TRACE Center at the University of Wisconsin under Mr. Gregg Vanderheiden[b] has been working under a National Science Foundation grant to develop such standardization.

Low-Force Controller: Experimental Prototype—For cases where present commercial versions may be

[b]A report by Gregg Vanderheiden on the second meeting of the International Standard Connections Project, June 19, 1980, appears in the "Standards" Department of this issue of BPR.

FIGURE 3. Special controllers are shown with the company's new rocker switch; a sip-puff or other low-force, low-excursion switch could be used. Model 1 controller (right) controls four lamps, alarms, or appliances. Model 2 controls eight and has added functions (all lights on, dim, bright, all units off). Lamp, appliance and wall-switch modules are identical to those shown with standard controllers in Figure 1. Figure 9 (page 59) shows user instruction panel of Model 2 controller.

inadequate for specific individuals, an experimental prototype has been designed and constructed to provide a slightly more versatile version. It provides, if desired, automatic scanning of eight numbers and six functions (to reduce the amount of sipping required), variable speed of scanning, more complete auditory feedback during automatic scanning (if desired) and improved options for continuous actuation of lights or appliances, or momentary actuation as for an electric bed.

The front panel of the prototype, (Fig. 4) shows all features available. The functions will be described first; a later section will describe the logic and wiring diagrams for this more complex version.

With low-force switch Sw1 in the "Manual" position, each time the "Scan" button or sip switch is activated to scan modules and functions, the next light-emitting diode (LED) in succession is illuminated. LED's at positions 1 thru 8 and the six functions will therefore each light in turn. With Sw1 in the "Auto Scan" position, that sequential scanning is done automatically and continuously without the need to activate the sip switch.

The rate of scan when in the "Auto Scan" mode is variable from about 1 step per second to 1 step per 10 seconds. This adjustment, by means of an external linear potentiometer (top center, Fig. 4), is included to permit the rehabilitation engineer or in some cases the disabled user to set the scanning speed to the individual's preference and ability.

When Sw1 is in the "Auto Scan" position and Sw2 is in the "Sound On" position, a tone will be heard for each step, with a longer tone for number 1, a useful feature for blind persons, or for a bed patient if the controller cannot easily be seen. When Sw1 is in the "Manual Scan" position, and Sw2 is in the "Sound On" position, a tone is heard only when LED number 1 is illuminated, the user knowing which subsequent LED is illuminated by counting the number of times he activates the sip switch.

Thus the handicapped user can voluntarily scan the numbered modules and the available functions with either visual or auditory (or both) feedback of the instantaneous position he has reached. While the numbered LED corresponding to the module to be controlled is illuminated, the disabled user may press the "Activate" button or puff on the puff switch; this will cause the controller to send the corresponding number code. If Sw3 is in the "Auto On" position, the "On" code will also be sent, turning on the selected module and its attached light or appliance.

If, instead of "Auto On", Sw3 is in the "Momentary On" position, and the user has activated the puff switch while the LED for the desired module was lit, then when continued scanning reaches the "Momentary On" LED position, activating the puff switch again will turn on the selected module—but only for as long as the puff switch remains activated. (This is a useful feature for activating electric beds, etc.)

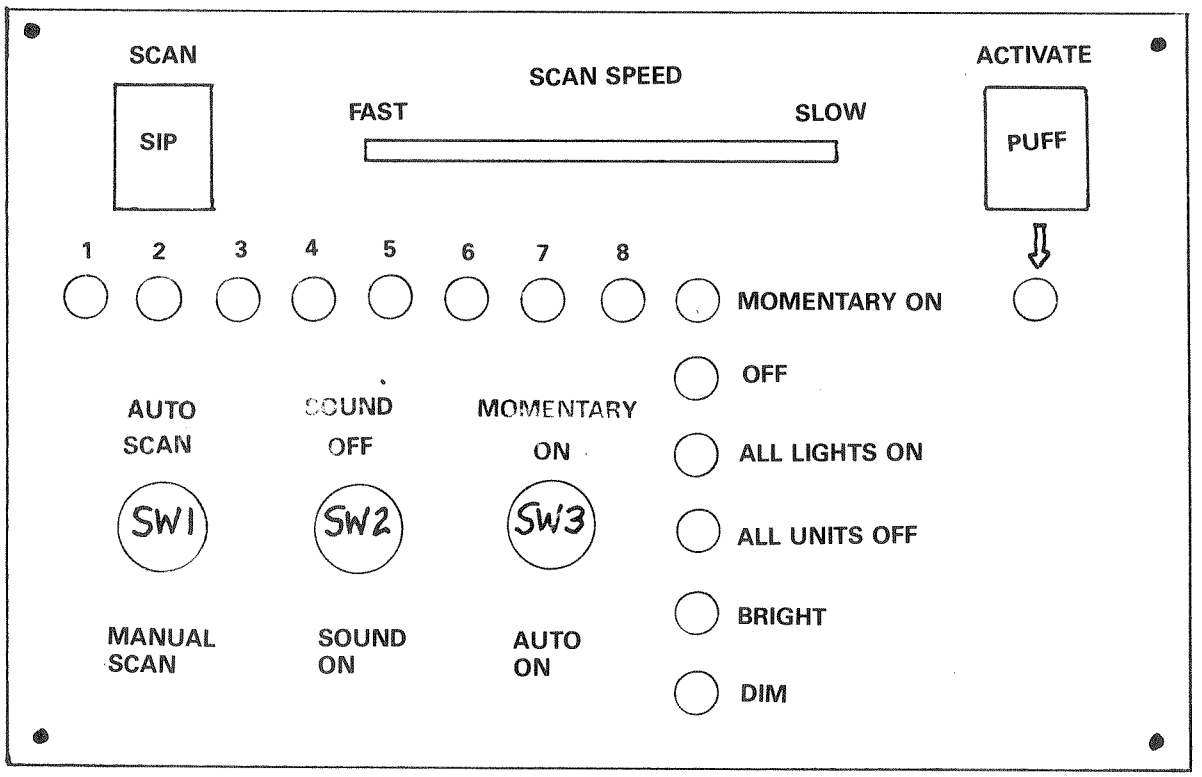

FIGURE 4.—Front panel of experimental prototype, shown actual size.

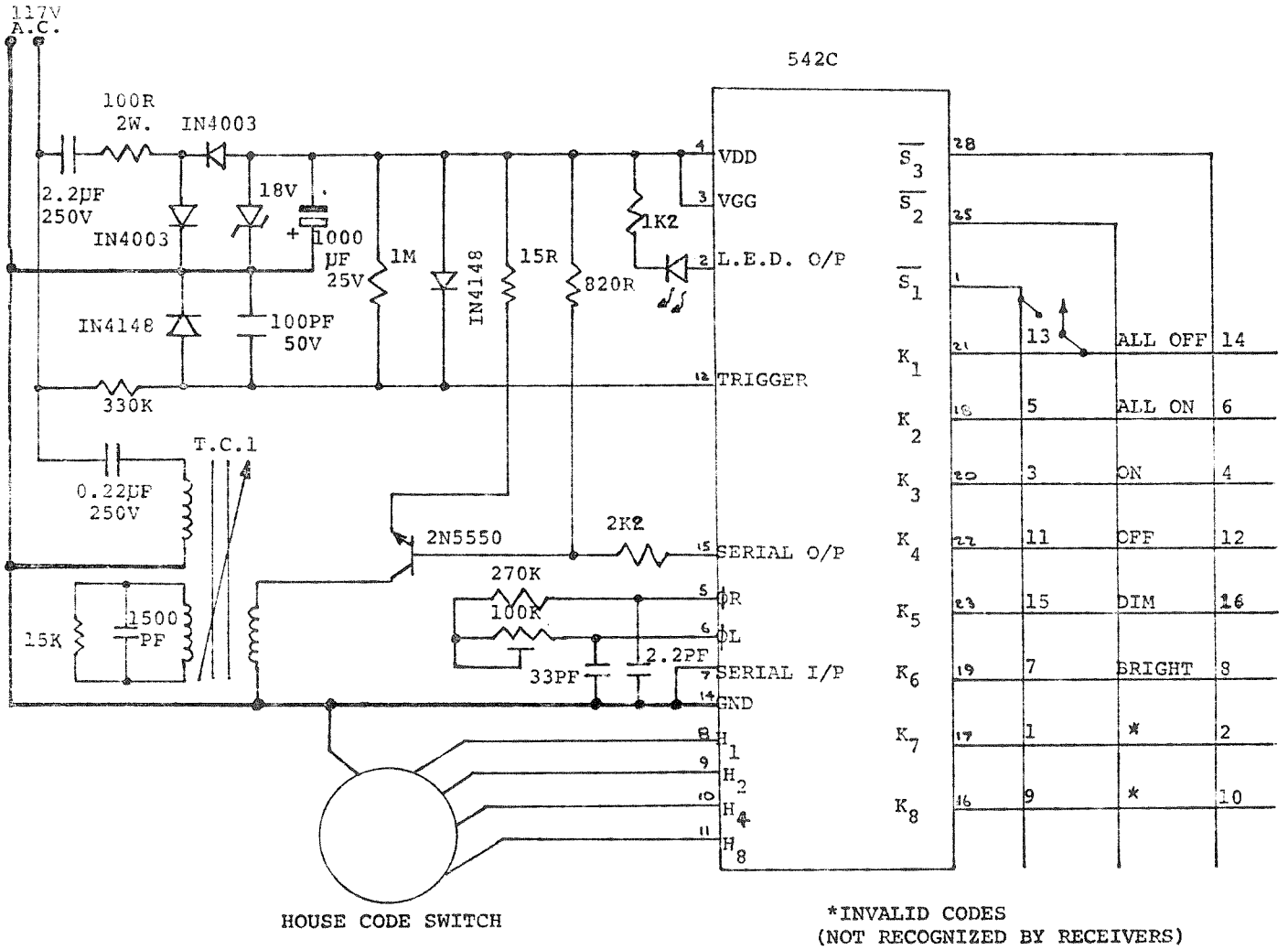

FIGURE 5.
Circuit diagram of BSR X-10 Command Console. Circuitry at the left forms power supply and transmission circuitry for standard Command Console. The schematic 3x8 key matrix on the right (only one of the 24 switches is shown, to simplify the drawing) can be replaced by low-force switches and a special logic circuit (described in text) equivalent to a 3x8 matrix.

In similar fashion, to turn off, brighten, or dim a light[c], the puff switch should be activated when the appropriate one of those three LEDs is illuminated (after the user has previously activated the puff switch while the LED representing that module and its light was illuminated). Similarly, to turn "All Lights On" or "All Units Off", one would scan (using the sip switch or automatic scan) until one of those two LEDs was lit, at which time activating the puff switch would send the code for "All Lights On" or "All Units Off" to all appropriate modules.

Note that the foregoing references to "sip & puff" switches can apply to either the two pushbutton switches ("Scan, and Activate") on the controller itself, or a separate sip-and-puff switch, tongue switch, rocker switch, etc. plugged into the back of the controller.

Some Technical Aspects

The circuit diagram for the Command Console and its crucial 542C chip is shown schematically in Figure 5.

[c]Puff switch activation dwell-time determines the degree of brightness or dimming which results from the command. The circuit which responds to actually brighten or dim the light is located in the module.

The left portion, representing the power supply, transmission circuitry, and House Code switch, will be required with any version of the special controller. The right portion represents the 3x8 key matrix normally controlled by pushbuttons but replaced by logic circuitry in the two commercial versions, or in the experimental prototype of the special controller.

The versatile logic circuit to replace the Command Console keys is described in the remainder of this article. It could be a self-contained controller using the 542C chip available from BSR, for use with the power supply and transmission circuitry shown at the left in Figure 5. Alternatively, it could be built (by a hobbyist for example) as an addition to a standard BSR Command Console, with suitable provisions for change of the basic voltage from minus 18 volts in the Console to the minus 15-volt power supply used in the proposed design. (Artwork for a printed circuit board for this experimental prototype is available on request from the author.) The same kind of logic and most of the circuitry are used in the two commercially available models of the special controller shown in Figure 3.

The 542C chip will transmit a code onto the utility company's power line, using the external circuitry shown at the left in Figure 5, when the appropriate

strobe output ($\bar{S}_1$, $\bar{S}_2$, or $\bar{S}_3$) is connected to the desired key input (K_1 through K_8).

Normally, this connection is made by pushing the desired key on the Command Console, symbolized by the switching matrix at the right side of the 542C chip in Figure 5. (For clarity, only a single switch corresponding to button 13 is shown on a diagonal line from the horizontal line from K_1 and chip connecting pin 21 to the vertical line connected to pin 1 and representing strobe line $\bar{S}_1$. In reality, there are similar switches for each of the 16 buttons for numbered keys and 6 for functions on the Command Console.) Each strobe line continuously carries its unique form of timing signal.

Thus, when button 13 is pushed and the switch is closed to connect $\bar{S}_1$ and K_1, the internal circuitry of chip 542C "knows" that key K_1 has been connected to $\bar{S}_1$, so it transmits the code for 13, together with the selected House Code, via the circuitry on the left in Figure 5, onto the 117-V a.c. house wiring. The switches on the desired module have been set to the same House Code as the controller and to unit code 13, so its external circuitry responds. If the user then presses the button corresponding to "On," module 13 will turn on, lighting the lamp plugged into this module.

Similarly, to transmit the code for module 1, $\bar{S}_1$ must be connected to K_7, and connection of $\bar{S}_3$ to K_7 would transmit the code for module 2. The special circuitry described here, of course, replaces the keys of the Command Console.

Logic and Functions of the Special Controller—It is possible to connect any strobe output to any key input by using a 1-to-8 line de-multiplexer such as the 4051, external circuitry selecting which strobe is routed to the input and a 3-bit binary word selecting which of the 8 outputs are enabled. See Figure 6 for a block diagram of this special controller for up to 8 modules.

The "control" in Figure 6 comes from the disabled person's use of the Scan button, sip control, or Auto Scan to "clock" a counter and the "send code" switch (marked "Activate" in Figure 4) or a puff switch, to enable the 4051 to route the appropriate strobe to the correct "K" input on the 542C chip.

Figure 7 is the "truth table" of the logic system. Figure 8 is the final wiring diagram.

The truth table relates the counts selected by the disabled person (0 to 15), the output in binary code of a divide-by-16 counter shown as 74C161 in Figure 8, the states in binary code and the corresponding outputs in decimal numerals of the 4051 de-multiplexer, the corresponding Command Console key "K," the chosen strobe line "$\bar{S}$," and the final "code sent" onto the house 117-V a.c. power line to operate the chosen module(s).

The address lines (Fig. 6) of the 4051 de-multiplexer are controlled by the divide-by-16 counter, 74C161 in Figure 8, whose A, B, C outputs cycle through counts 0 to 7 twice in each 16-count cycle as shown in Figure 7. Selections therefore are made among the 8 "K" inputs of the 542C chip twice for each complete cycle of the counter.

The B and C output lines of the counter go directly to the corresponding address lines of the 4051 de-multiplexer, so their states match. But the A and D output lines from the counter join in a NAND logic gate whose output goes through an inverter to the A address line to the 4051. The D output of the counter is low (logic 0) during the first eight but high (logic 1) during the second eight counts. The address line A to the 4051, therefore, is low during the first 8 counts and the same as the A output of the counter for the second 8 counts.

FIGURE 6.—Block diagram of special controller.

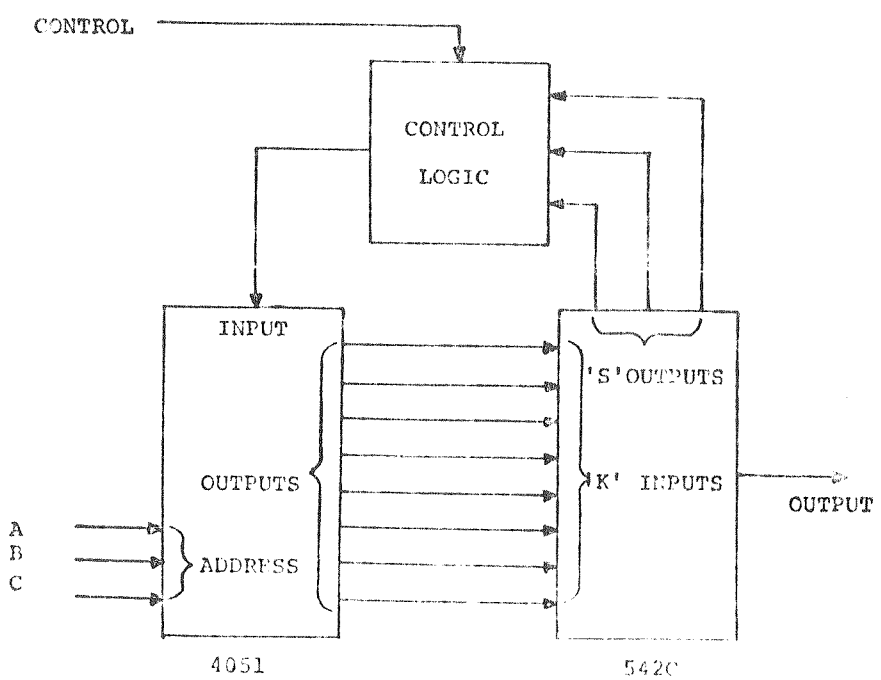

Count	Counter				4051			4051	'K'	'S'	Code
	A	B	C	D	A	B	C	O/P			Sent
0	0	0	0	0	0	0	0	0	K_7	S_1	1
1	1	0	0	0	0	0	0	0	K_7	S_3	2
2	0	1	0	0	0	1	0	2	K_3	S_1	3
3	1	1	0	0	0	1	0	2	K_3	S_3	4
4	0	0	1	0	0	0	1	4	K_2	S_1	5
5	1	0	1	0	0	0	1	4	K_2	S_3	6
6	0	1	1	0	0	1	1	6	K_6	S_1	7
7	1	1	1	0	0	1	1	6	K_6	S_3	8
8	0	0	0	1	0	0	0	0	K_7	S_2	*
9	1	0	0	1	1	0	0	1	K_8	S_2	*
0	0	1	0	1	0	1	0	2	K_3	S_2	ON
1	1	1	0	1	1	1	0	3	K_4	S_2	OFF
2	0	0	1	1	0	0	1	4	K_2	S_2	ALL ON
3	1	0	1	1	1	0	1	5	K_1	S_2	ALL OFF
4	0	1	1	1	0	1	1	6	K_6	S_2	BRIGHT
5	1	1	1	1	1	1	1	7	K_5	S_2	DIM

FIGURE 7.—The "truth table" of the logic system (described on opposite page).

As shown in Figure 7, the decimal equivalent of the binary number representing the 4051 de-multiplexer output is therefore 0, 0, 2, 2, 4, 4, 6, 6 (or all even numbers) for the first eight counts but 0, 1, 2, 3, 4, 5, 6, 7 (sequential) for the second eight.

It can be arranged that different strobe outputs on the $\overline{S}$ lines are selected for each set of eight "K" inputs selected. It is required that codes for modules 1 through 8 be transmitted on the first eight counts. The D output of the counter is low at this time. The schematic switching matrix on the right side of Figure 5 shows that "odd" numbered codes are on $\overline{S}_1$ and "even" numbered codes are on $\overline{S}_3$. Therefore, the logic circuitry is designed so $\overline{S}_1$ or $\overline{S}_3$ is selected depending on the state of the A **output** of the **counter**. This is high, or logic 1, on odd counts, selecting $\overline{S}_3$, and low (logic 0) on even, selecting $\overline{S}_1$. Because during the first eight counts the A *address* of the 4051 de-multiplexer is held low, only outputs 0, 2, 4, and 6 are selected with the A output of the *counter* selecting which strobe ($\overline{S}_1$ or $\overline{S}_3$) is routed to the intput of the 4051 de-multiplexer, and hence to one of the outputs of the 4051.

During the second eight counts, the D output of the counter is high, or logic 1, and therefore $\overline{S}_2$ is routed to the input of the 4051 de-multiplexer. All eight outputs are enabled in sequence, and the functions therefore are transmitted in the order shown in Figure 7. It can be seen from the truth table, Figure 7, that counts 8 and 9 would enable the 542C chip to transmit codes which are invalid. The counter, therefore, is pre-set to count 10 on the next clock pulse after count 7 is decoded, skipping over counts 8 and 9.

The outputs of the 4051 are enabled by a low value, or logic 0, on pin number 6 of the 4051 chip (provided by closing the puff switch). The 542C chip therefore will only transmit a code signal when the voltage on this pin is low.

A 4-to-16 line decoder, shown as 74C154 in Figure 8, is used to light the appropriate one of the 14 light-emitting diodes which are labeled with the 8 numbers and 6 functions available.

The 555 Oscillator, shown at the lower left in Figure 8, provides the clock pulses used for Auto Scan. The scan rate can be varied from about 1 step per second to about 1 step per 10 seconds with the potentiometer VR1 (symbolized by the slider on a 1 M resistor). With the switch Sw1 at the top left of Figure 8 in the "Manual" position, the counter receives its clock pulses from the sip switch—with Sw1 in the "Auto" position the

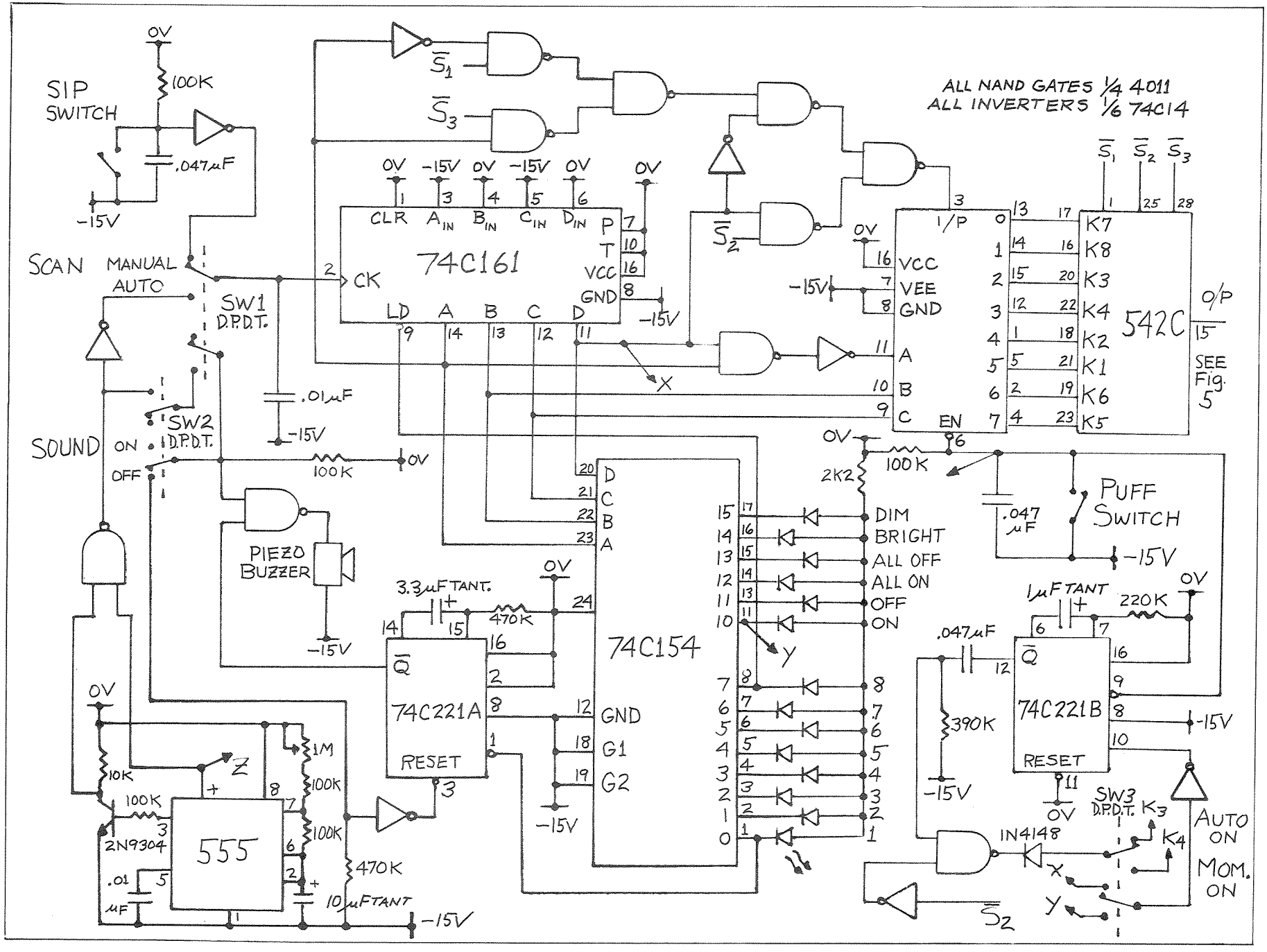

FIGURE 8. Final wiring diagram of experimental prototype providing automatic scanning and other refinements.

counter receives its clock pulses from the 555 Oscillator.

With the switch Sw2 in the "Sound On" position, a tone is heard from the piezo buzzer (at left in Figure 8). Thus the controller can be used by blind persons. If Sw1 is in the "Manual" position, this tone is generated each time the 74C221A is triggered from the first output of the 74C154. The tone will therefore be heard each time the LED corresponding to number 1 is lit. If Sw1 is in the "Auto" position, the tone is heard on every count, with a longer tone on count number 1.

Each time a code is transmitted by enabling the 4051 de-multiplexer by means of the puff switch, the 74C221B (Fig. 8) is triggered and will give a pulse which will gate $\overline{S}_2$ through to the wiper of Sw3, (at lower right in Figure 8). If Sw3 is in the "Auto On" position, then $\overline{S}_2$ will be routed to K_3 of the 542C chip and the "On" code (Fig. 5) will automatically be sent after any number code. If Sw3 is in the "Momentary On" position, $\overline{S}_2$ will be routed to K_4 and the code for "Off" will be sent after the code for "On." A module thus addressed will therefore remain on only as long as the puff is sustained, a useful feature in controlling a motorized bed or similar device.

Summary and Applications

In the past, devices to aid the severely disabled have beeen made in small volume or have been custom-built. Costs have been very high and repair services scarce or nonexistent except from the original builder. However, electronic equipment mass-produced with high reliability and intended for widespread public use, offers new opportunities for serving the disabled at relatively low cost.

A commercially available environmental control system designed for the convenience of the general public, transmitting pushbutton commands over the house wiring, can be used as-is by many disabled individuals. Two versions of a special controller, using available sip-puff or other low-force switches, are commercially available at about $100 to control lamps or appliances plugged into modules that are the same as those used with the conventional system. A still more complex and versatile special controller has been designed and built in prototype form.

A number of laboratories and commercial firms (e.g., Northwestern University (2), Johns Hopkins Applied Physics Laboratory, VA Rehabilitation Engineering Center, Prentke-Romich Co., Medical Equipment Distributors, Inc., etc.) also are interested in application of this type of equipment to aid the severely disabled. Many of the basic components are already commercially available from retail outlets. The details described here, and the availability of artwork for a printed circuit board for the experimental prototype, should help rehabilitation engineers or hobbyists working on the problems of specific disabled individuals to assemble existing components or make relatively minor modifications in commerical circuits. The role of the rehabilitation engineer in selecting and fitting specific components and controls most effectively and economically to the needs of the individual patient, and in training the attendant or family to make further adjustments as needed, cannot be over-emphasized ■

References

1. Schmeisser, Gerhard, and Seamone, Woodrow: "Low Cost Assistive Device Systems for a High-Spinal-Cord-Injured Person in the Home Environment—a Technical Note," Bull Prosth Res BPR 10-32, Fall 1979, pp. 212–223.

2. Gibler, C D, Van Vorhis RL, Strysik JS, Heckathorne CW, Doubler VA, and Childress DC: MICRODEC: A Microprocessor-based Environmental Control System. In Proc. International Conference on Rehabilitation Engineering held June 16–20, 1980, Toronto, Ontario, Canada, pages 33–35.

FIGURE 9. Close-up view of special controller Model 2, also shown top left in Figure 3, reveals instructions for use in terms of the newly introduced BSR rocker switch.