Journal of Rehabilitation R&D
Vol. 20, No. 1, 1983 (BPR 10-38)
Pages 45–56

Evaluation of a Curb-Climbing Aid for Manual Wheelchairs: Considerations of Stability, Effort, and Safety [a]

ANDREW Y. J. SZETO, Ph. D.[b]
ROGER N. WHITE, M.S.

Department of Biomedical Engineering
Louisiana Tech University
Ruston, Louisiana 71272

Abstract—The experimental and theoretical procedures used to gather ergonomic data and derive theoretical estimates of stability, effort, and safety in use of a curb-climbing aid for standard manual wheelchairs are presented. The aid, intended for use of paraplegic persons, employs ramps which the user while seated in the chair can deploy and retrieve using attached telescoping rods. Ramps and rods may be carried in a ready-for-use position or stowed away in a bag hung behind the wheelchair backrest. Design, construction and method of use were described in White RN, Szeto AYJ, and Hogan HA: A practical curb-climbing aid for wheelchair-bound paraplegic patients (a progress report) Bull Prosth Res BPR 10-34 17(2):13–19 Fall 1980.

INTRODUCTION

Many devices have been developed to enable manual wheelchair users to overcome curb barriers, but they have often proved to be impractical due to their mechanical complexities, limited curb climbing capability, slowness of operation, or poor adaptability toward existing wheelchairs (1, 2). As a result, wheelchair users surmount curbs with the assistance of others, or by curb jumping.

Curb jumping, a technique taught to many paraplegic persons during their rehabilitation, is accomplished in the following manner: The wheelchair operator—

1. Tilts the chair back onto its large drive wheels (a "wheelie"), raising the casters clear of the ground;
2. Moves toward the curb while clearing the casters over the curb; and
3. Forces the drive wheels up and over the curb.

Although curb-jumping provides the advantage of requiring no special devices for operation, the technique jolts the wheelchair and its occupant, endangers the occupant, has a limited curb-climbing range, and severely accelerates the wear of the wheelchair, particularly its tires, axles, and wheelbearings.

In an earlier paper (3) we described a curb-climbing aid that could be incorporated easily into most present wheelchairs with very little modification. The preliminary test results presented in that paper indicated that the aid embodied a workable idea and was quite easy to use. Constructed of inexpensive and lightweight materials, the aid has proved itself simple to maintain or repair. Most importantly, the aid has enabled manual-wheelchair users to safely surmount curbs of greater height than could be negotiated using the riskier curb-jumping technique.

This paper will delineate the operational parameters of that curb-climbing aid in terms of some criteria of stability, effort, safety, and

[a] Project funded by grants from the Division of Vocational Rehabilitation, State of Louisiana, and performed at the Department of Biomedical Engineering, Louisiana Tech University, Ruston, Louisiana 71272.

[b] Address correspondence to Dr. Andrew Szeto at 10689 Sauterne Place, San Diego, California 92131.

speed. Because the aid utilizes portable ramps to surmount curbs, the ergonomic strength and stability data presented herein might also apply to architectural short ramp design as well as to the design of new wheelchairs and wheelchair retrofit devices. The construction details and preliminary test results were reported in our earlier paper (3) so only a summary description of the aid itself will be given here as a prelude to the discussion of the experimental procedures used to gather ergonomic data and derive theoretical estimates of stability, effort, and safety.

DESIGN CONCEPT

The essence of the curb-climbing aid is that ramps for overcoming curbs are carried along with the wheelchair and used by the chair's occupant when needed. Two aluminum ramps, 91.4 cm long and 10.2 cm wide with 2.5 cm side walls, are held in alignment with the wheels by telescoping control rods which attach to and rotate about the wheelchair's rear axles. The control rods are also used to manipulate the ramps into their proper positions prior to ascent or descent of a curb.

The aid package requires only a minor (and reversible) modification to adapt most wheelchairs, and it weighs only 3.6 kg. The modification required of a "standard" wheelchair is limited to welding a simple bracket to the outer end of each extended main wheel axle. With the ramps and control rods mounted ready for prompt use, chair width is increased by a total of 15 cm. When the chair is used indoors or where no curbs are expected, a paraplegic occupant, unaided, can dismount the ramps and rods and store them all in a canvas bag hanging from the seat back. In that configuration the chair is only 2.5 cm wider than its original unmodified width.

The curb-climbing task is performed by lowering the ramps into place (Fig. la), rolling the chair up the ramps and onto the walkway (Fig. lb), and then rotating the ramps up and over the shoulders and back into their forward positions (Fig. 1c). The curb-descending task is performed in a similar manner.

The curb-climbing aid requires some upper-body strength and good hand dexterity for its use, but as the results imply, the aid could be used even by the partial quadriplegic wheelchair-user among the subjects in this evaluation.

LABORATORY EVALUATION

Objective of the Evaluation

The primary objective of this research was to evaluate the effectiveness of the curb-climbing aid using both able-bodied and handicapped subjects. The laboratory evaluation used the Everest & Jennings "Premier" model as the test wheelchair to gather the following information:

1. Effort required to operate the aid;
2. Stability and safe operating range of the device; and
3. Times required to completely ascend or descend typical curbs, using the aid.

The amount of effort required of a person to use an assistive device can determine the acceptability and practicality of that device; a device requiring excessive effort causes muscle fatigue and physical exhaustion when used on a regular basis. Hence the effort required for use of the aid was ascertained. Since the curb-climbing task is of short duration involving limit-

C

ed upper-body movement, the dynamic effort required to use this aid was estimated using a static-effort approach (4). To estimate the static effort needed by an individual to use the curb-climbing aid, his maximum voluntary strength and the strength required to operate the aid on two likely curb heights were compared.

Stability and safety are two other key determinants of a mobility aid's acceptability and practicality. For the wheelchair and its occupant, stability depends on the proper relationship between the position of the overall center of gravity (CG) and the base of support. Therefore the CG of the total system was determined for two occupant body-positions, under the static conditions.

Because curbs are often encountered in heavy-traffic areas, the time required to use the curb-climbing aid must be minimized. Ideally, the aid should allow the wheelchair operator to descend a curb, cross the street, and ascend the opposite curb within the 30–60 seconds of the green portion of a traffic signal cycle. The operational speed of the aid was ascertained, to resolve this concern.

Subjects—Volunteers involved in the evaluation of the aid included 18 able-bodied subjects and 6 disabled subjects; 12 of the able-bodied subjects were male (Table 1); 6 were female (Table 2). The disabled subjects included 1 paraplegic female, 1 partial C4–C6 quadriplegic male, and 4 paraplegic males (Table 3). The able-bodied subjects ranged in age from 18 to 31 years; the ages of the handicapped subjects ranged from 17 to 33 years.

Theoretical calculations and experimental methods—To estimate the effort required to use the curb-climbing aid, the amount of handrim force needed to move the occupied wheelchair up a ramp inclined at θ degrees was compared with the maximum static force that the wheelchair occupant could exert on the handrim. The handrim force would need to overcome the weight of the wheelchair-plus-user (i.e., gravity effects) and the effects of rolling resistance. Theoretical calculations were used to estimate the former while experimental methods were used to establish the latter.

The rolling resistance (μ) of our test wheelchair (e.g., wheel-bearing and tire friction) was measured by recording the horizontal force that would just start the chair forward on smooth, level ground, as per the methodology of Peizer, Wright, and Freiberger (5). The average of values thus found for μ under various loading conditions was 0.0281. Although this value will vary depending on the conditions of the wheel bearings, its maximum contribution to the force needed to just start the wheelchair up an incline was less than 4 percent. Hence, rolling resistance was ignored, for the sake of simplicity, in our theoretical calculations of the required handrim force.

The minimum handrim force (F) required to propel

B

A

FIGURE 1.
Operation of the Curb-Climbing Aid: a) the ramps are positioned on the curb; b) the wheelchair is rolled up the ramps; and c) the ramps are rotated over the shoulders and back in to their rest positions.

TABLE 1.
Profile of male able-bodied subjects

Subject	Age	Weight (Kg) Percentile*	Height (m) Percentile*
1	18	77.2/55	1.80/82
2	23	74.2/46	1.78/79
3	21	79.0/61	1.75/61
4	20	72.6/41	1.75/61
6	20	80.8/66	1.83/91
7	31	69.5/31	1.68/22
8	24	64.0/17	1.80/82
10	23	99.9/96	1.78/79
11	28	86.9/81	1.78/79
14	18	63.3/15	1.78/79
15	20	77.9/58	1.85/95
16	19	77.6/57	1.85/95

*Population percentile data (9) have been included for comparison purposes.
NOTE: Subject 21 did not complete all his tests so his results were not included.

TABLE 2.
Profile of female able-bodied subjects.

Subject	Age	Weight (Kg) Percentile*	Height (m) Percentile*
5	22	56.8/30	1.63/68
12	19	52.7/17	1.68/88
17	20	56.6/29	1.70/94
18	20	49.7/9	1.60/51
19	21	65.1/59	1.73/97
20	20	62.7/14	1.65/78

*Population percentile data (9) have been included for comparison purposes.

TABLE 3.
Profile of disabled subjects participating in the evaluation.

Subject	Sex	Injury Level	Age	Weight (Kg)	Height (m)
9Q	M	C4–C6*	21	64.9	1.83
13P	F	L1–L2	20	59.0	1.73
22P	M	T6	23	66.7	1.80
23P	M	T9	27	54.5	1.85
24P	M	T11	17	62.2	1.85
25P	M	T9	33	68.6	1.72

*Denotes C4–C6 incomplete lesion, partial paralysis.

the occupied wheelchair up a pair of 91.4-cm-long ramps inclined at θ degrees was determined by analyzing the free-body diagrams of the wheelchair frame and drive wheels (Fig. 2). Ignoring the effects of friction, the required force F must be greater than or equal to (L_2/L_1) W sin θ where W is the total weight of the occupant and wheelchair, L_2 is the drive-wheel radius, and L_1 is the handrim radius.

$$F = 1.1\ W \sin \theta \qquad [1]$$

The theoretical calculations of the force (F) which would just start the wheelchair up an incline were checked against experimentally measured values using the same pulley-and-weight apparatus previously used to determine μ. The calculated and measured values of F for ramp inclines corresponding to 10.2-cm and 20.4-cm curbs agreed to within 5 percent, despite the fact that rolling friction was ignored in our theoretical calculations. Thus we felt justified in using the theoretical value of F in all subsequent comparisons to estimate effort required to use the curb-climbing aid.

To complete the estimation of the effort required to operate the device, each subject's ability to generate a forward force on the wheelchair rims was determined. Force applied to a wheelchair handrim was measured using a modified handrim that was attached to an Available Motions Inventory (AMI) torque module (Fig. 3). After calibration (by hanging standard weights on the handrim) the 54.6-cm-diameter handrim and the torque module were mounted on a plywood frame and bolted onto the AMI frame. The plywood frame positioned the center of the instrumented handrim at the same height (33 cm) above ground as the rim of the test wheelchair. A cushionless and armless wooden chair having the same seat height as the test wheelchair was placed next to the instrumented handrim and used during isometric strength tests. The wooden chair provided the necessary stationary support for the subjects without altering the spatial relationships between the subject's shoulder and hand, and the rim.

Measurements of isometric strength for the right hand alone and then the left hand alone were made, using three handgrip positions—top of the rim, 60 degrees forward, and 60 degrees rearward of the top. The averages for the right hand and left hand were then added together. Isometric holding time ranged from 3 to 6 seconds.

Stability

Stability of the aid and safety to the user are two other key determinants of an aid's acceptability and practicality. Stability of the occupied wheelchair was characterized by three variables: (i) the rearward tipover angle, (ii) the forward tipover angle, and (iii) the

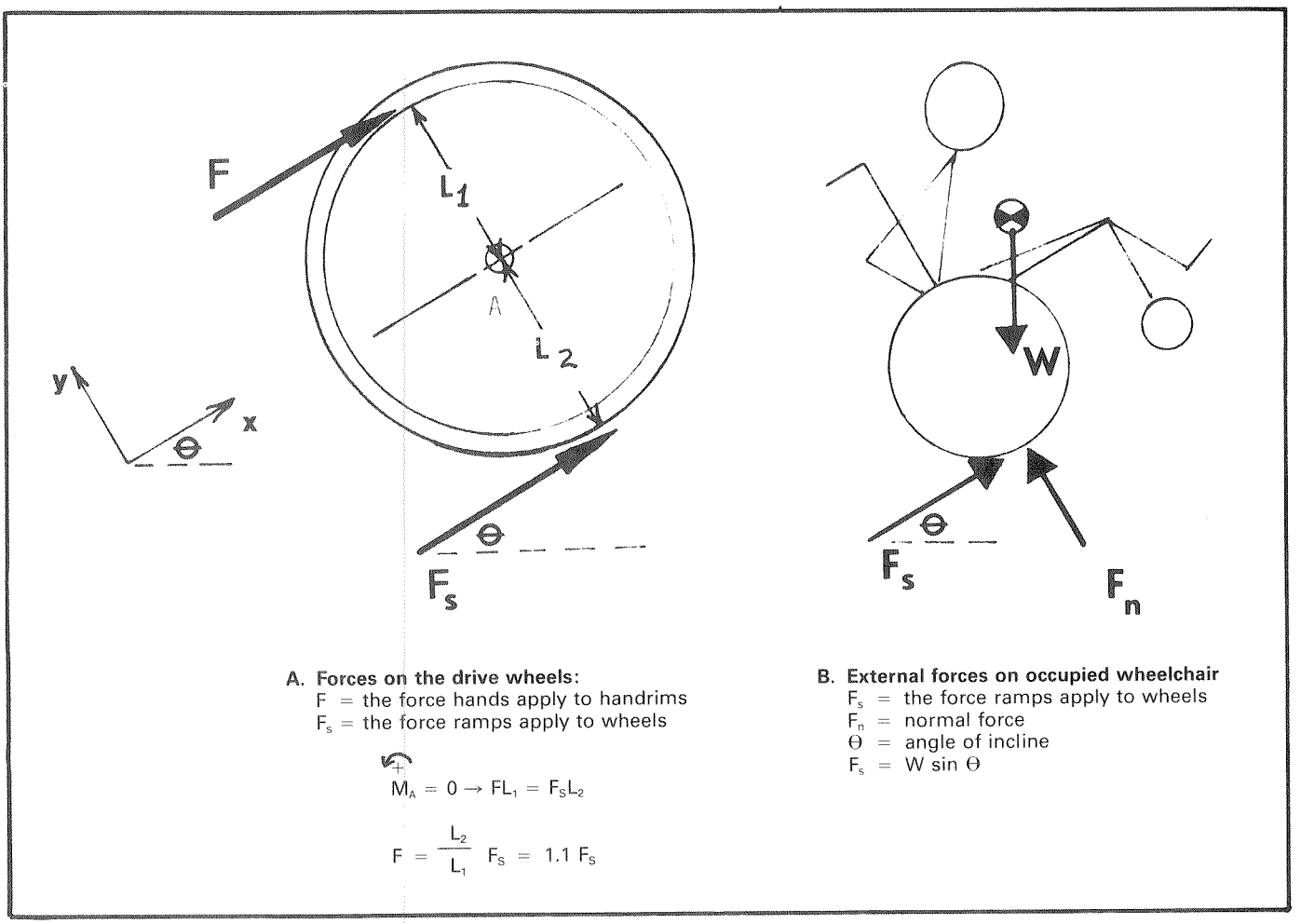

A. Forces on the drive wheels:
F = the force hands apply to handrims
F_s = the force ramps apply to wheels

$$M_A = 0 \rightarrow FL_1 = F_S L_2$$

$$F = \frac{L_2}{L_1} F_S = 1.1\ F_S$$

B. External forces on occupied wheelchair
F_s = the force ramps apply to wheels
F_n = normal force
Θ = angle of incline
F_s = W sin Θ

FIGURE 2.
External forces acting on the occupied wheelchair when the chair is on the verge of moving up the incline. a) Forces on the drive wheels. b) External forces on the occupied wheelchair. Note: Rolling resistance has been ignored.

gradient that would cause wheel slippage on the portable ramps (6).

The rearward tipover angle—The gradient that causes the occupied wheelchair to tip rearward characterizes the stability of the curb-climbing aid while in the ascending mode. Rearward tipover depends on the relationship between the position of the overall center of gravity (CG) and the wheelchair's base of support. Under static or constant-velocity conditions, the wheelchair tips backwards if the vertical projection of the combined center of gravity of the wheelchair

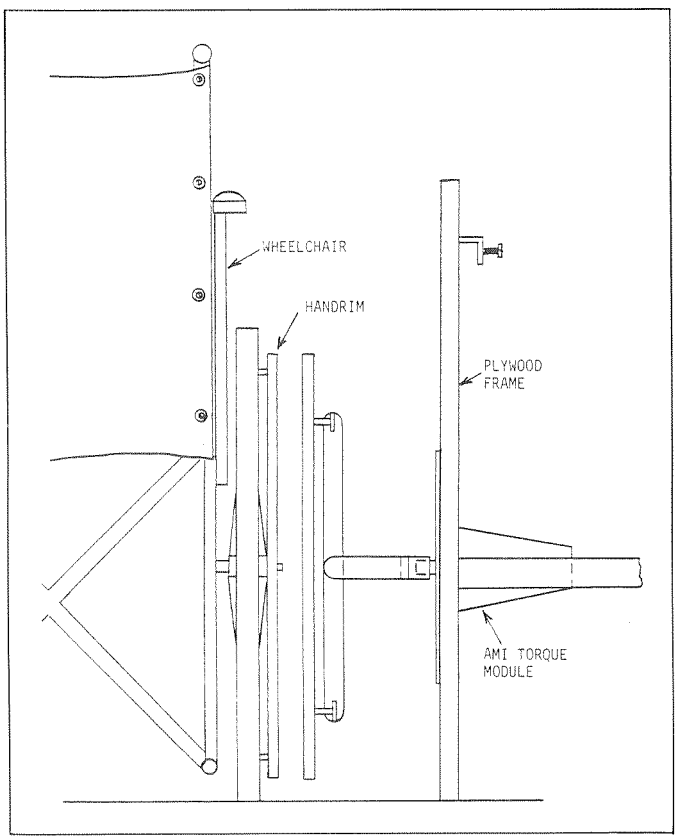

FIGURE 3.
Comparison of the handrim on the AMI torque module and the wheelchair handrim. For stationary support during the strength tests, the subject sat in an armless wooden chair having the same seat height as the wheelchair. Comparable body, shoulder, and hand positions were thus ensured.

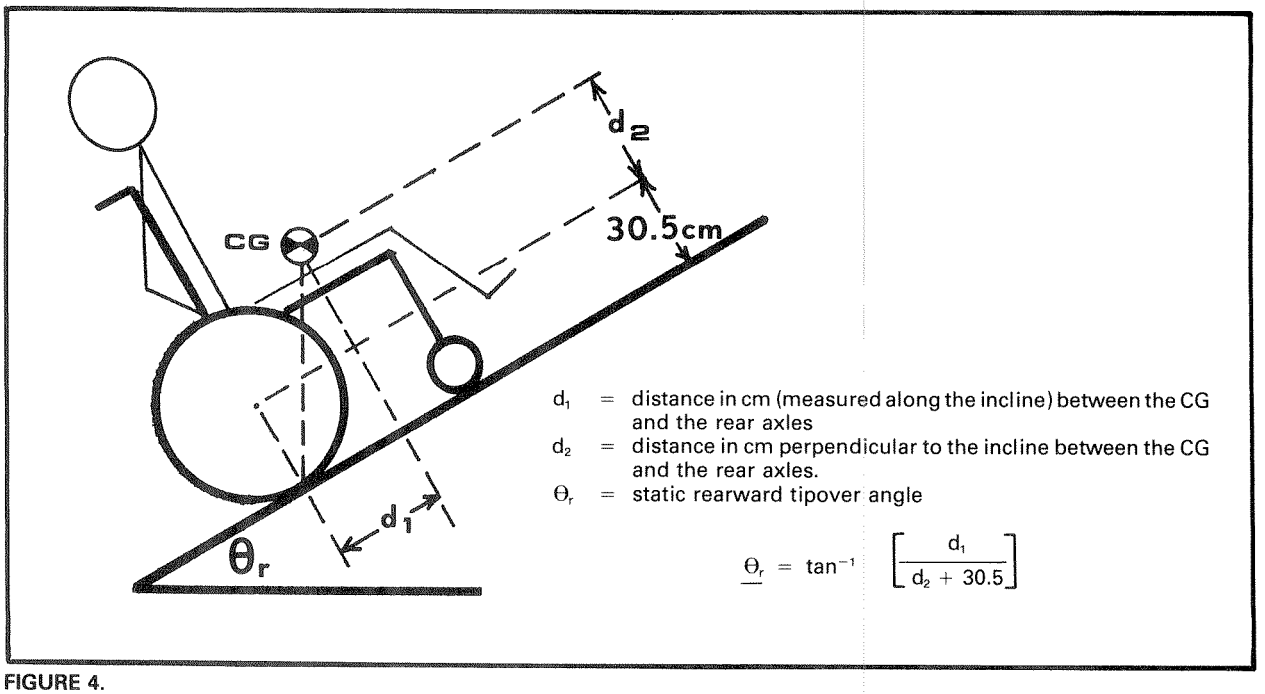

FIGURE 4.
The static rearward tipover angle. The wheelchair will be on the verge of tipping rearward when the CG is located directly over the point of contact between the rear wheels and the incline surface.

and occupant falls behind the point of contact between the rear wheels and the ramp surfaces (Fig. 4).

The wheelchair will be on the verge of tipping over when the angle of incline is equal to θ_r where

$$\theta_r = \tan^{-1}\left[\frac{d_1}{d_2 + 30.5}\right] \qquad [2]$$

and where d_1 (in cm) is the distance along the incline between the overall CG and the rear axles, d_2 (in cm) is the distance (along a normal to the incline) between the overall CG and rear axles, and 30.5 is the radius (in cm) of the drive wheels of the test wheelchair.

In order to predict the limits of stability, the location of the overall center of gravity relative to the rear axles (d_1 and d_2) was determined. The location of the center of gravity of the occupied wheelchair (d_1 and d_2) will undoubtedly change when the occupant or his body position changes. Therefore, stability was estimated for two likely body positions of the wheelchair user: (i) with the upper body pressed against the seat back and (ii) with the upper body assuming a 20-degree forward lean.

The horizontal position of the center of gravity (d_1) of the occupied wheelchair with respect to its rear axles was measured for each of the two body positions using a center of gravity platform patterned after Peizer et al. (5) and Page (7). The occupied wheelchair was placed on a board supported at one end by a fulcrum and at the other end by a scale. The wheelchair was placed facing the scale so that the rear axles were 48.3 cm from the fulcrum and 53.3 cm from the scale (Fig. 5). The horizontal location of the CG for the occupied wheelchair was thus found by solving the resulting lever problem:

$$d_1 = \frac{F_{sc}(101.6)}{W} - 48.3 \qquad [3]$$

where F_{sc} was the force indicated on the scale and W was the total weight of the wheelchair plus occupant.

For the 18 able-bodied subjects examined, the horizontal position of CG (or d_1) averaged 13.0 ± 1.5 cm when they were not leaning forward and 18.6 ± 2.1 cm when they were leaning forward 20 degrees. For the 6 disabled subjects in this study, d_1 averaged 13.3 ± 3.0 cm when they were not leaning forward and 19.5 ± 2.5 cm when they were leaning forward 20 degrees.

The vertical position of the CG was located by tilting each subject seated in the wheelchair rearward and recording the angle of tilt (rearward balance angle) at which the subject and chair would be statically balanced on just the rear drive wheels. The CG's vertical location (d_2) was then calculated from the following equation:

$$d_2 = \frac{d_1}{\tan \theta_s} \qquad [4]$$

where d_1 was the horizontal location of CG with respect to the rear axles and θ_s was the rearward balance angle. To minimize errors arising from this procedure, the subject was asked to maintain a posture of 0 degree forward lean and a 20 degree forward lean during tilting. θ_s was also measured more than once to ensure dependable readings.

For the 18 able-bodied subjects tested, d_2 averaged 23.3 ± 3.2 cm when they did not lean forward and 23.4 ± 5.4 cm when they leaned forward 20 degrees. For the

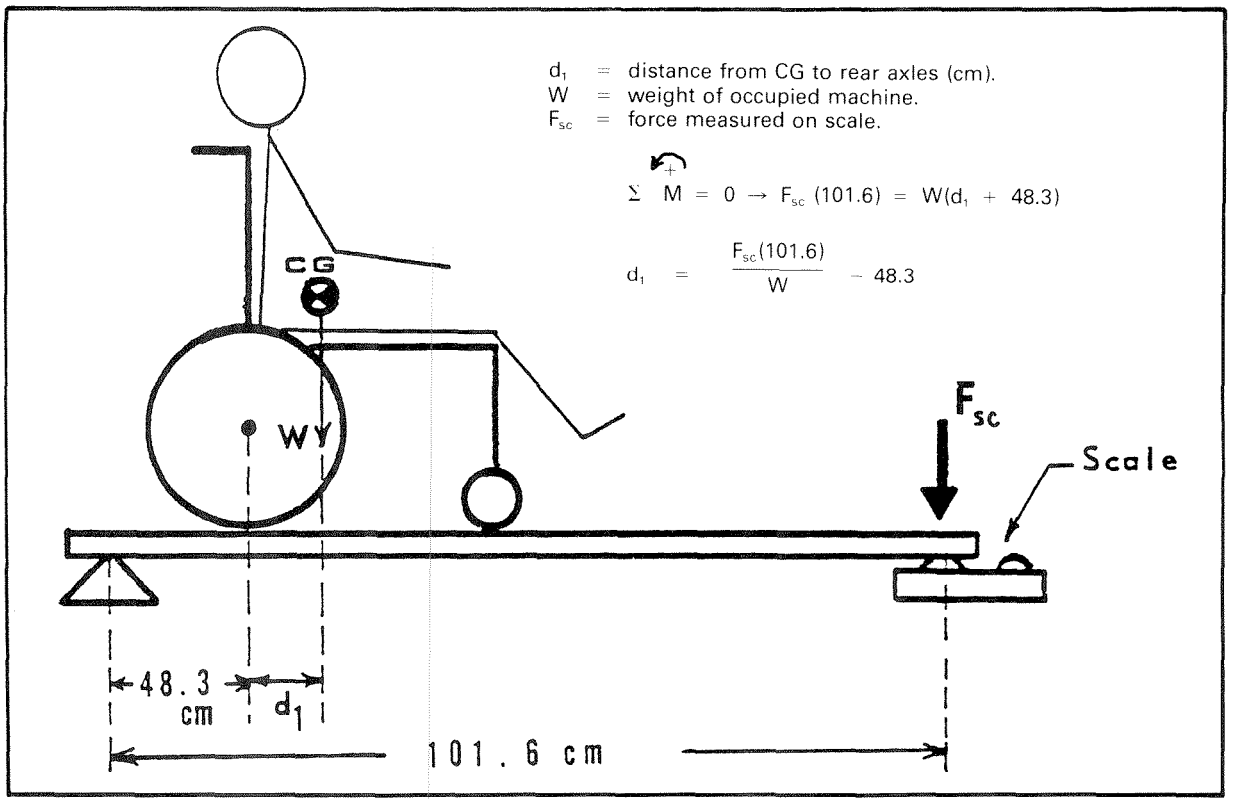

FIGURE 5
The center of gravity platform used to determine the horizontal position of overall CG. (Note: This schematic drawing has not been drawn to scale).

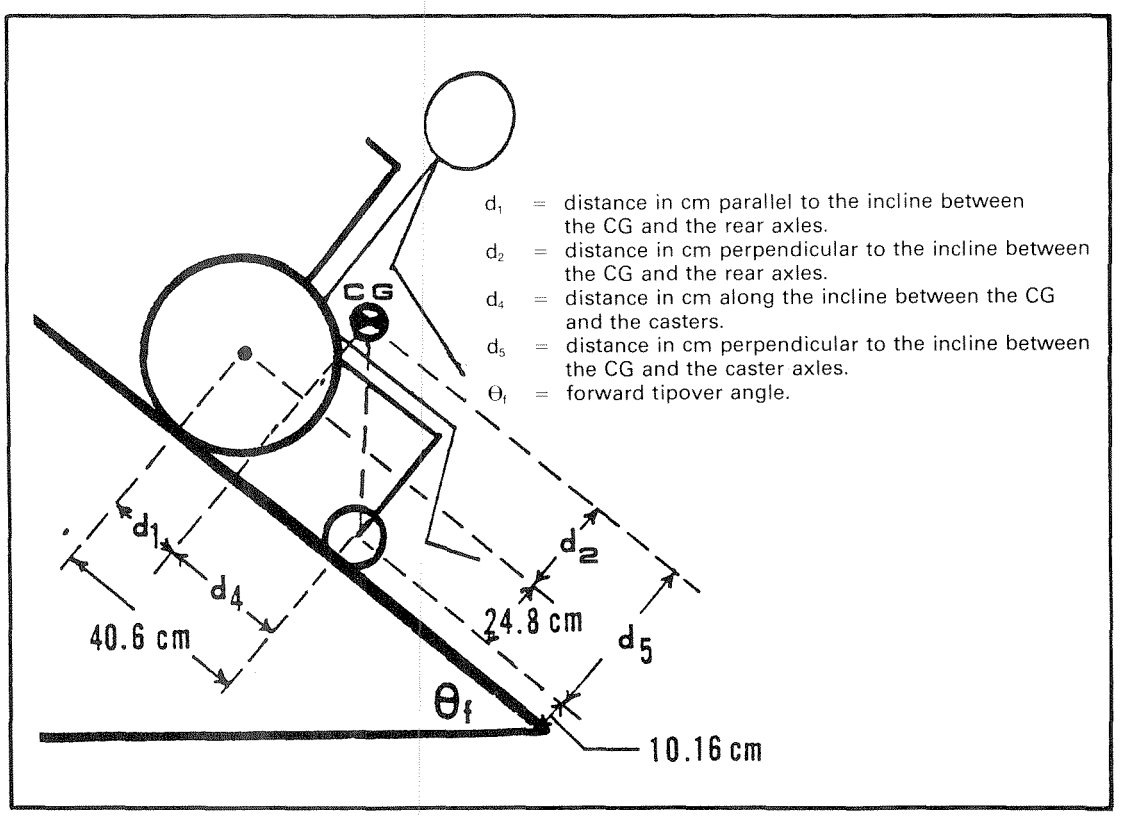

FIGURE 6.
The static forward tipover angle. The chair will be on the verge of tipping forward when the incline angle is equal to Θ_f.

6 disabled subjects, d_2 averaged 27.9 ± 9.6 cm when they did not lean forward and 25.5 ± 3.8 cm when they leaned forward 20 degrees.

The forward tipover angle—The downward slope which causes the occupied wheelchair to be on the verge of tipping forward is called the forward tipover gradient. Under static or constant velocity conditions, the wheelchair tips forward when the overall CG moves forward of the caster wheels (Fig. 6). The forward tipover angle was calculated from the following equation:

$$\theta_f = \tan^{-1}\left[\frac{d_4}{d_5}\right] \qquad [5]$$

where d_4 is the distance (along a line parallel to the ramp) between the CG and the point of contact of front caster wheels, and d_5 is the distance (along a line normal to the plane of the ramp) between the CG and the caster axles. The wheelchair will not tip over if the portable ramps remain at an incline less than θ_f.

For our test wheelchair, the center of the caster wheels is 40.6 cm forward of the rear axles and 24.8 cm below the rear axles (Fig. 6). Therefore, the distances d_4 and d_5 between the CG and the caster wheels are, respectively: $d_4 = (40.6 - d_1)$ and $d_5 = (24.8 + d_2)$. (Since d_1 and d_2 were found earlier, d_4 and d_5 could be calculated.)

Slippage—For the curb-climbing aid to operate effectively and safely, the wheels of the chair must not slip while rolling or stopped on the portable ramps. Factors that determine whether or not the wheels slip include the ramps' incline and the coefficient of friction between the wheels and the ramps. The wheels will not slip while ascending the ramps as long as the following relationship holds true:

$$\mu_w W_r \cos\theta > W_r \sin\theta$$

$$\text{or} \qquad [6]$$

$$\mu_w > \tan\theta$$

where μ_w is the static coefficient of friction between the tires and the ramp, W_r is the weight on the rear wheels, and θ is the angle of ascent.

The static coefficient of friction (μ_w) between the wheels of the wheelchair and the surfaces of the portable ramps was measured utilizing the same pulley-and-weight apparatus mentioned earlier. The force (F_w) which slid the loaded and braked wheelchair backwards on the ramps, and the static coefficient of friction (μ_w) between the wheelchair wheels and the dry ramp surfaces, had the following relationship:

$$\mu_w = \frac{F_w}{W_r}. \qquad [7]$$

To determine the sensitivity of μ_w to W_r, F_w was measured for various loading conditions. The average value of μ_w was 0.925, indicating that the Safety Walk® anti-skid tape which covered the portable ramps was indeed effective. In comparison, the rubber-on-concrete static coefficient for friction ranges from 0.6 to 0.9 (8).

Task Completion Times

Because of potential adverse weather conditions and hazards to the subjects, the curb-climbing tests were performed indoors on an artificial curb. The artificial curb was a plywood platform 1.8 meters square standing 10.2 cm high. Removable legs could be added to raise that platform to a height of 20.4 cm. These two heights represented an average curb and the highest curb found on the Louisiana Tech campus.

The task completion times were documented for each subject ascending and descending our 10.2 cm and 20.4 cm high artificial curbs using our curb-climbing aid. The task completion time represented the time needed to position the ramps properly, ascend or descend the ramps, and return the ramps to their resting positions. Before being timed, each subject was given a demonstration of the aid in operation, verbal instructions for using the aid, and one practice climb and descent. Since the amount of time spent by a subject on the floor level would be analogous to time the person would spend on the street while trying to surmount a curb, each subject's "floor" time was also logged. Floor time during an ascent included the time needed to deploy the ramps and go up the ramps. Floor time during a descent included the time needed to go down the ramps and reposition the ramps back into their rest positions on the foot rests. Floor time was used subsequently to estimate the amount of time that a person would be exposed to traffic if he were using the aid to cross a two-lane street.

	Subject #	Maximum Voluntary Strength (N)	MVS as % of Body Wt.	MVS as % of Total Wt.	Percentage of Max. Effort 10.2 cm Curb	20.4 cm Curb	Maximum Curb Ht. (cm)
Able-bodied Men	1	572.7	76	57	21	43	35.7
	2	575.2	79	59	21	41	36.9
	3	424.1	55	42	29	59	26.0
	4	508.5	71	53	23	46	33.2
	6	509.4	64	49	25	50	30.7
	7	581.4	85	63	19	39	39.2
	8	643.0	103	74	17	33	46.0
	10	479.1	49	39	31	62	24.4
	11	555.2	65	51	24	48	31.6
	14	539.3	87	62	20	39	38.9
	15	658.0	86	65	19	37	40.7
	16	419.3	55	42	29	59	26.0
	mean	538.8	73	55	23	46	34.1
	± s.d.	± 75.3	± 16	± 11	± 5	± 10	± 6.7
Able-bodied Women	5	297.7	53	37	33	66	23.2
	12	260.9	51	34	36	71	21.4
	17	322.5	58	40	30	60	25.2
	18	188.7	39	26	47	94	16.1
	19	294.7	46	33	37	73	20.8
	20	380.8	62	44	27	55	27.7
	mean	290.0	52	36	35	70	22.4
	± s.d.	± 64.0	± 8	± 6	± 7	± 14	± 4.0
Handicapped	9Q	341.5	54	39	31	63	24.2
	13P	282.2	49	34	36	71	21.4
	22P	587.5	90	66	19	37	40.8
	23P	577.8	108	74	16	33	46.3
	24P	567.4	93	67	18	37	41.5
	25P	565.1	84	62	20	40	38.5
	mean	486.9	80	57	23	47	35.5
	± s.d.	± 137.1	± 23	± 16	± 8	± 16	± 10.2

TABLE 4.
Maximum voluntary strength (MVS) applied to wheelchair handrim.*

* MVS represents the sum of the average strength available from the right arm alone and the left arm alone, as applied to the wheelchair handrim.
Also listed is the percentage of MVS required to climb the 10.2-cm and 20.4-cm test curbs. The last column shows the height of the curb that would theoretically require 75 percent of that subject's maximum effort.

DISCUSSION OF RESULTS

Required Strength Versus Maximum Voluntary Strength

The theoretical strength, equation [1], required to surmount the test curbs (10.2 cm and 20.4 cm) was recorded as a percentage of the subject's measured maximum voluntary strength (Table 4). This percentage represented each subject's estimated level of effort involved in performing the curb-climbing tasks.

The able-bodied female subjects used a higher percentage of their maximum effort to climb the test curbs than the able-bodied male subjects. The former exerted an average of 35±7 percent of their maximum effort to climb the 10.2 cm curb and an average of 70±14 percent of their maximum effort to climb the 20.4 cm curb. In contrast, the able-bodied men used an average of 23±5 percent of maximum effort to climb the 10.2 cm curb and an average of 46±10 percent of maximum to climb the 20.4 cm curb.

Two of the handicapped subjects had effort levels similar to those of the able-bodied female subjects. Subject 9Q (a male partial quadriplegic) used 31 percent and 63 percent of his maximum effort to climb the 10.2 cm and 20.4 cm curbs, respectively. Subject 13P (a female paraplegic) used 36 percent of her maximum effort to climb the 10.2 cm curb and 71 percent of her maximum effort to climb the 20.4 cm curb.

The four other handicapped subjects were male paraplegics (22P, 23P, 24P, 25P). Their upper-body strengths were such that their percentage-of-effort on the test curbs ranked lowest among all the subjects. Subject 23P required the least effort to climb the test

curbs (16 percent and 33 percent). Paraplegic subjects 24P, 22P, and 25P ranked third, fourth and fifth, respectively. Such low effort levels for the male paraplegic subjects were attributed to their high arm and upper-torso strengths developed from their regular use of manual wheelchairs—and relatively low body weights resulting from atrophied leg musculature.

For the curb-climbing aid to be practical with respect to the exertion level, the operation of the aid should not require 100 percent effort because high effort would cause excessive operator fatigue and eventual user rejection. However, 75–85 percent of maximum effort can be exerted for up to 10 to 15 seconds without causing significant muscle fatigue (2). Since the exertion phase (ramp climbing) of the aid operation was estimated to be no longer than 15 seconds, an effort level of 75 percent was chosen as a conservative maximum practical limit for operation of the curb-climbing aid. Therefore, the curb height which would require the user to exert 75 percent of maximum voluntary strength was considered to be the highest curb that could be surmounted routinely, using our aid.

To determine the theoretical curb height requiring 75 percent of a subject's maximum effort, the equation [1] was modified into:

$$(0.75)F_{max} = (1.1)W \sin \theta \qquad [8]$$

where F_{max} is the maximum voluntary strength exerted on the AMI mounted instrumented handrim. With a portable ramp length of 91.4 cm, the curb height (H) requiring 75 percent of maximum effort was:

$$H(cm) = 91.4 \left[\frac{(0.75)\,F_{max}}{(1.1)W}\right] \qquad [9]$$

The theoretical maximum curb height for each subject is given in the last column of Table 4.

As shown in the last column of Table 4, curb heights of less than 24.2 cm would not require more than 75 percent of maximum effort from any of the male subjects (able-bodied or handicapped). The male paraplegic subjects would apply approximately 75 percent of their maximum effort on curbs 38.5 cm to 46.3 cm high. Thus the male subjects apparently did not need to exert high levels of effort to surmount the 20.4 cm curb when using the aid during the time trials.

Based on their maximum voluntary strength data, the female subjects would reach their 75 percent effort level when climbing curbs ranging from 16.1 cm to 27.7 cm high. Only subject 18 had to exert an effort level above 75 percent in surmounting the taller (20.4 cm) test curb during the time trials. Because the higher curb required a higher average effort of the female subjects, they climbed this curb more slowly than did the male subjects.

Stability

As stated earlier, stability limits of the aid are characterized by the static rearward tipover angle, the forward tipover angle, and the incline resulting in wheel slippage on the portable ramps. The rearward tipover angles for each subject (Table 5) in the two tested body positions were calculated using equation [2]. The handicapped subjects' average rearward tipover angle of 12.9 ± 2.5 degrees was very similar to that of the able-bodied, 13.6 ± 1.2 degrees.

The rearward tipover angles of all subjects (able-bodied and handicapped) ranged from 15.5 to 21.9 degrees when each subject bent his upper body 20 degrees forward of the backrest. Leaning forward allowed the subjects to increase their rearward tipover angles by up to 100 percent. Increases in the rearward tipover angles represented increased stability for the occupied wheelchair as it traveled up an incline.

Based on the rearward tipover angle of each subject, the curb that would result in such an angle was calculated. If a forward lean of 20 degrees is assumed, all subjects would be able to climb a 24-cm-high curb using our aid without exceeding their rearward tipover angles. Thus, it was predicted that no subject would tip rearward while ascending the 20.4-cm test curb. This expectation was confirmed by the actual experimental results of the curb-climbing tests.

The average forward tipover angle for all 24 subjects, calculated using equation [5], was 29 degrees which corresponds to a curb height of 44 cm, an unlikely height for descending. Thus, the forward tipover was not considered a significant factor in determining stability of the wheelchair when using the curb-climbing aid.

One final stability consideration was **wheel slippage**. The gradient which caused the wheels to slip on the ramp surfaces was found to be 42.8 degrees and independent of subject's weight. The portable ramps would be at this angle if placed on a 62.1-cm-high curb, a very unlikely curb. Also, since the incline resulting in wheel slippage was much greater than any subject's rearward tipover angle, tipover would occur much before slippage. Wheel slippage on dry ramps was therefore not identified as a significant stability factor.

Task Completion Times

With effort and stability parameters established, the final phase of evaluating the curb-climbing aid was designed to determine the time required to operate the aid on typical curbs. The total time required for naive subjects to deploy the ramps, ascend or descend the 10.2 cm curb and the 20.4 cm curb and then reposition the ramps, is listed in Table 6. Despite their unfamiliarity with the operation of the wheelchair and the aid, all subjects, able-bodied and handicapped, suc-

cessfully operated the aid on both the curb heights tested. Only three of the 18 able-bodied subjects required longer than one minute to complete the ascent or the descent of the test curbs. The able-bodied subjects took an average of 39 seconds to ascend or descend the lower curb, and 45 seconds to ascend and 41 seconds to descend the higher curb.

The able-bodied subjects differed with respect to whether they took more or less time to surmount the 20.4 cm curb versus the 10.2 cm curb. Eleven of the 18 able-bodied subjects ascended the higher curb more slowly than they ascended the lower curb. The other seven climbed the higher curb faster. In descending the two test curbs, 10 did the higher curb slower while 8 did it faster.

Three of the 6 handicapped subjects, although very familiar with the use of wheelchairs, surmounted the test curbs using the aid more slowly than the able-bodied subjects. Markedly higher task completion times for subjects 9Q and 23P were attributed to their physical inability to readily bend forward as far as the able-bodied subjects could. These subjects used one hand to position the ramps and the other hand to maintain trunk stability. The other handicapped subject (13P) appeared quite apprehensive about the aid and took over two minutes to ascend the 20.4 cm curb.

The other three handicapped subjects, all male paraplegics, performed the curb climbing tasks as fast as, if not faster than, any of the able-bodied subjects. Subject 24P completed the entire 10.2 cm curb-climbing task in less than 37 seconds; subjects 22P and 25P ascended the curb in less than 27 seconds.

If the curb-climbing aid were used to cross a street having no curb cut-outs, the time that the wheelchair user spent in the street would be very important. The time that each subject spent on the floor (i.e., "floor time") while ascending and descending the 10.2 cm curb or 20.4 cm curb (Table 6) is analogous to the total time that he or she would have spent in the street. Assuming that 10 seconds is needed to traverse the width of a two-lane street, 72 percent of the able-bodied test subjects and 66 percent of the handicapped test subjects would spend less than one minute in traffic (i.e., floor time plus 10 seconds) descending a 10.2 cm curb, crossing the street, and ascending a 10.2 cm curb. Since the task-completion times in Table 6 were recorded for subjects having almost no practice in operating the curb-climbing aid, it is likely the subjects could markedly reduce their performance times if they used the aid on a regular basis.

To estimate the effects of experience on task completion time, one able-bodied subject (#2) and one handicapped subject (#24P) were asked to ascend and descend the 10.2 cm curb two additional times after they had completed their original series of curb ascents and descents. The resulting task completion times are listed in Table 7.

TABLE 5.
Static (or constant-velocity) rearward tipover angles and the corresponding maximum curb heights surmountable for each subject with his back straight and back bent forward 20 degrees.

Subject	with back straight		with back bent forward 20°	
	Tipover angle (degrees)	Max. curb (cm)	Tipover angle (degrees)	Max. curb (cm)
Able-bodied				
1	13.9°	22.0	18.2°	28.7
2	15.5°	24.5	19.2°	30.0
3	14.7°	23.2	20.7°	32.3
4	14.8°	23.4	17.7°	27.8
6	12.7°	20.0	16.8°	26.4
7	12.4°	19.7	21.2°	33.1
8	11.9°	18.9	18.5°	29.0
10	11.7°	18.5	16.1°	25.4
11	13.2°	20.9	18.6°	29.2
14	12.7°	20.1	20.2°	31.7
15	14.2°	22.4	20.0°	31.3
16	13.1°	20.7	19.3°	30.1
5	14.1°	22.3	17.7°	27.9
12	12.2°	19.4	15.5°	24.4
17	14.4°	22.7	21.9°	34.1
19	13.9°	21.9	17.6°	27.7
20	15.3°	24.1	18.0°	28.3
mean:	13.6°	21.5	18.7°	29.3
s.d.:	± 1.2°	± 1.8	± 1.8°	± 2.7
Handicapped				
9Q	16.7°	26.3	21.9°	34.1
13P	13.2°	20.8	18.5°	29.1
22P	13.3°	21.2	18.1°	28.4
23P	9.3°	14.8	19.0°	29.8
24P	11.0°	17.4	16.7°	26.3
25P	13.7°	21.7	20.6°	32.1
mean:	12.9°	20.4	19.1°	30.0
s.d.:	± 2.5°	± 3.9	± 1.9°	± 2.8

With just two additional trials, the able-bodied subject was able to reduce his ascent time by 47 percent and his descent time by 36 percent. The handicapped subject likewise reduced his ascent time by 56 percent and his descent time by 29 percent. Both subjects were able to reduce their task completion times to under 20 seconds. This suggests that experience with using the curb-climbing aid can significantly decrease the amount of time needed to overcome curbs.

Effort versus Stability

The maximum curb height that an individual could surmount with the curb-climbing aid depends on two parameters: the user's available strength (see Table 4) and the stability of the occupied wheelchair during curb ascent (see Table 5). The data for the able-bodied male subjects show that, for 75 percent of the cases, the maximum curb height surmountable was limited by the stability parameter (i.e., rearward tipover angle) rather than by their available strengths. In contrast, the maximum curb height for all but one of the able-bodied female subjects was limited by their available

upper-body strengths, rather than their rearward tipover angles.

As expected from the above findings, the weaker handicapped subjects (i.e. the male quadriplegic, 9Q, and the female paraplegic, 13P) were limited in their curb-climbing capabilities by their strengths. The calculated rearward tipover angles of these two subjects indicated that they would remain stable climbing curbs as high as 29 cm. In contrast the four paraplegic male subjects, who possessed excellent upper-body strengths, were limited in their curb-climbing capabilities by their rearward tipover angles.

Based on data shown in the rightmost columns of Tables 4 and 5, the effective range of the curb-climbing aid appears to be about 24 cm for men and 21 cm for women. Curbs higher than 21 cm approach either the stability or strength limitation. The curb-climbing aid, therefore, allows the user to easily surmount often-encountered curbs of 16 cm with minimal risk of tipping over. Most users would also be able to climb curbs as high as 21 cm safely.

TABLE 6.
Ascent and descent times for curbs at 10.2 cm and 20.4 cm heights.

	10.2-cm-high curb			20.2-cm-high curb		
Subject	Ascent (sec)	Descent (sec)	Floor time (sec)	Ascent (sec)	Descent (sec)	Floor time (sec)
Able-bodied						
1	40.9	44.5	51.4	44.2	36.6	41.2
2	37.1	30.6	33.6	31.6	26.7	41.5
3	66.8	68.7	73.0	55.6	63.2	53.6
4	39.4	34.6	40.2	39.3	36.6	43.8
6	46.6	43.7	45.5	57.4	47.3	67.2
7	32.1	30.4	34.6	30.4	25.9	33.4
8	19.5	26.3	26.7	26.3	25.2	27.9
10	35.6	31.4	37.5	51.7	35.3	52.3
11	40.3	46.1	44.3	31.1	50.2	53.6
14	26.6	24.6	29.3	34.5	27.2	32.9
15	22.9	26.1	23.5	45.4	35.0	43.6
16	27.0	27.7	27.6	39.4	36.5	40.7
5	57.2	54.1	59.0	45.8	44.7	48.2
12	67.4	72.0	72.4	53.5	47.8	49.4
17	33.8	52.0	43.0	55.0	53.6	64.1
18	50.3	46.4	58.2	65.0	70.7	64.7
19	36.4	27.2	35.1	56.8	52.8	56.6
20	27.3	24.0	25.5	55.0	28.7	55.6
mean:	39.3	39.5	42.2	45.4	41.0	48.4
s.d.:	±13.9	±14.9	±15.3	±11.5	±12.6	±11.2
Handicapped						
9Q	48.1	61.5	59.0	77.3	66.8	69.1
13P	52.7	45.4	46.0	131.1	100.9	138.8
22P	26.6	27.6	31.8	33.1	35.9	32.3
23P	71.8	53.2	70.2	59.3	72.2	64.7
24P	36.6	27.6	33.2	23.9	23.6	25.0
25P	26.5	43.7	37.2	35.9	43.9	46.0
mean:	43.7	43.2	46.2	60.1	57.2	62.7
s.d.:	±17.5	13.6	±15.5	±39.9	±28.2	±41.1

SUMMARY

Laboratory tests of the curb-climbing aid indicated that the aid can be a practical, reliable interim solution to the curb barrier problem. The main findings were:

1. The aid can be added to most manual wheelchairs with only minor modifications. The ramps are not permanently attached to the chair and therefore do not interfere with its portability nor drastically compromise its ability to negotiate narrow passageways when the ramps are stored in a canvas bag behind the seat.

2. The aid does not add a significant amount of weight to the wheelchair; the aid weighs only 3.6 kg (below the 4.5 kg weight limitation suggested by Peizer and Wright (1) for such aids).

3. The aid can be used by most individuals to easily climb curbs as high as 21 cm without tipping over or necessitating extraordinary levels of effort. Stabilty of the aid is such that even a 24 cm high curb could be surmounted by most wheelchair users without tipping backwards.

4. The aid is simple to use. Despite the uncustomized fit between the test subjects and test wheelchair, all subjects were able to use the aid to climb a 20.4 cm high curb after being given only one demonstration.

5. With some practice, a manual-wheelchair user can use the aid quickly enough to cross curbed streets during the green portion of a typical traffic signal cycle.

6. Although the curb-climbing aid was designed for use by paraplegic persons, it was also successfully used by a partial quadriplegic test subject on the 10.2 cm and 20.4 cm test curbs. This suggests that the utility of the device extends beyond its targeted paraplegic population. In fact, the weaker or elderly paraplegic user and more capable partial quadriplegic persons may have a greater need for such an aid, since they may lack the strength, agility, or confidence to curb-jump with safety.

7. Because the design and construction of the aid are simple and the materials used are readily available, the aid is expected to be inexpensive to produce,

TABLE 7.
Improvement in task completion time on the 10.2-cm curb following some practice

	Curb ascent times (sec)			Curb descent times (sec)		
Subject	Run # 1	Run # 2	Run # 3	Run # 1	Run # 2	Run # 3
2	37.1	26.6	19.5	30.6	26.3	19.6
24P	36.6	20.7	16.1	27.6	21.7	19.7

purchase, and maintain.

8. Experience thus far with the aid indicates that it is quite reliable. The same aid was used for these curb-climbing tests as well as for two years of various mechanical tests and demonstrations without significant wear or breakdowns.

CLOSING COMMENTS

The selection of which variables to examine and types of tests to conduct was strongly influenced by the constraints of time, money, and personnel. Because of these constraints or shortcomings, the ergonomic data presented in this paper may not be applicable to all circumstances. Factors like seat cushions, leg rests, book pouches, etc. will affect the overall center of gravity and thus could alter the stability estimates offered in Table 5. In light of these constraints, conservative estimates of friction, strength requirements, and operating speed were used in our analyses whenever possible.

Field tests of this curb-climbing aid will be necessary to conclusively establish its worth. However, these tests would be more appropriately done by an independent disabled-consumer organization. In the meantime, the analyses, calculations, and data presented herein support the above findings and can serve as a useful guide in the design of future wheelchairs and wheelchair add-on aids. ■

REFERENCES

1. Peizer E and Wright DM: Five years of wheelchair evaluation. Bull Prosth Res, BPR 10-11 Spring 1969, pp 9–37.
2. Staros A: Veterans Administration Prosthetics Center Research, Report, Orthopedic Aids, Item 6 (Proreco Curb-Climbing Wheelchair Assembly). Bull Prosth Res, BPR 10-6 Fall 1966, pp 269–272.
3. White RN, Szeto AYJ, and Hogan HA: A practical curb-climbing aid for wheelchair-bound paraplegic persons (a progress report). Bull Prosth Res BPR 10-34, 17(2):13–19, Fall 1980.
4. Kroemer KHE: Human strength: terminology development and interpretation of data. Human Factors 12(3):297–313, 1970.
5. Peizer E, Wright DM, and Freiberger H: Bioengineering methods of wheelchair evaluation. Bull Prosth Res, BPR 10-1 Spring 1964, pp 77–100.
6. Stout G: Some aspects of high performance indoor/outdoor wheelchairs. Bull Prosth Res BPR 10-32, 16(2):135–175, Fall 1979.
7. Page RL: The position and dependence on weight and height of the center of gravity of young adult males. Ergonomics 17(5):603–612, 1976.
8. Beer FP and Johnston ER: Mechanics for Engineers. New York, McGraw-Hill, p 276, 1976.
9. Stoudt HW et al.: Weight, Height, and Selected Body Dimensions of Adults, United States 1960–1962, Public Health Source Publication No. 1000, Series 11 No. 8.