Journal of Rehabilitation Research
and Development, Vol. 21, No. 1
BPR 10-39 pages 19—31

Design and Evaluation of a Prosthesis Control System Based on the Concept of Extended Physiological Proprioception

JAMES A. DOUBLER, Ph. D.[a]
DUDLEY S. CHILDRESS, Ph. D.
Prosthetics Research Laboratory
Northwestern University
345 East Superior Street
Chicago, Illinois 60611

Abstract—This paper describes the design and evaluation of an experimental prosthesis-control system based on the concept of extended physiological proprioception (EPP). It was originally hypothesized that EPP control effected by residual shoulder motion could be effectively applied in multifunctional prostheses for shoulder disarticulation amputees.

The experimental system developed for this study utilized a force-driven control scheme and a shoulder motion transduction system in which direct cable linkages to the prosthesis components were used to implement EPP position-servo relationships between shoulder elevation-depression and prosthesis elbow flexion, and between shoulder protraction-retraction and prosthesis wrist rotation. The results of experiments performed with this prosthesis (and with an experimental velocity-controlled prosthesis implemented for comparison purposes) clearly demonstrated the superior performance provided by EPP control of prosthesis function.

INTRODUCTION

This paper describes the design and evaluation of a prosthesis-control system based on the concept of extended physiological proprioception (EPP). Originally formalized and proposed as a prothesis-control technique by D. C. Simpson (1, 2), the concept of extended physiological proprioception implies that the manner in which a mechanical device is controlled or used can be such that the operator is able to accurately perceive its static and dynamic characteristics through naturally arising proprioceptive sensations. By eliciting proprioceptive sensations, the device becomes an artificial extension of the operator, part of the functioning person.

Simpson proposed that EPP could be realized in the control of externally powered prostheses by coupling prosthesis function to residual wrist motion in a position-servo relationship where the input cannot "beat" the output. With such a system, the position and movement of a prosthesis joint are directly related at all times to the position and movement of an anatomical joint —the anatomical joint being constrained to maintain a constant relationship between it and the prosthesis. The system is a position servomechanism in which the input is physically constrained by the output so that the input cannot get ahead of or fall behind the output, even temporarily. By intimately linking physiological joint position to prosthesis joint position, the pro-

[a] Now with AT&T Bell Laboratories Naperville, Illinois.

prioceptive feedback mechanisms related to the control of the physiological joint may be directly associated with the operation of the prosthesis joint.

For this study, it was originally hypothesized that EPP control derived from residual shoulder motion could be effectively applied in multifunctional prostheses for shoulder disarticulation amputees. A companion paper to this one (Doubler and Childress (3)) describes a study analyzing the ability of subjects to control physiological shoulder elevation-depression and protraction-retraction as prosthesis control inputs. The results of that study showed that functional control comparable to that of the physiological elbow and wrist, as defined by tracking capabilities, could be realized with a hypothetical EPP-controlled prosthesis with non-limiting dynamic response characteristics in which wrist rotation and elbow flexion are controlled by shoulder protraction-retraction and evaluation-depression, respectively. The results of the investigation also indicated that EPP control of prosthesis function has considerably more potential for providing effective control than does velocity control.

On the basis of these findings, an experimental prosthesis was built for further investigation of the concept and principles of EPP control. The experimental prosthesis utilized a shoulder motion transduction mechanism in which direct cable linkages to the prosthesis components were used to implement EPP position-servo relationships between shoulder elevation-depression and prosthesis elbow flexion, and between shoulder protraction-retraction and prosthesis wrist rotation. The experimental prosthesis was evaluated by non-amputee subjects performing random tracking experiments equivalent to those performed in the studies described by Doubler and Childress (3). Blind positioning experiments were also performed. In evaluating the prosthesis, task performance using EPP control was compared to that for velocity control of the same mechanism, and also to task performance by subjects using their physiological upper-extremity.

PRELIMINARY SYSTEM DESIGN CONSIDERATIONS

The manner in which the position-servo relationships is implemented is the key to the effectiveness of EPP control. There are different approaches to implementing such a control relationship and it is important to consider the performance tradeoffs that can be expected with the different approaches.

A system diagram of one possible implementation of an EPP position-servo prosthesis controller is presented in Figure 1. In the system shown, m(t) corresponds to the central nervous system representation of the prosthesis user's motor intent. This signal is assumed to control the position and movement of an anatomical joint which specifies the prosthesis control input. The difference between the joint position, denoted by x(t), and the scaled output position of the prosthesis actuator being controlled, denoted by y(t), provides an error signal, e(t), from which the drive signal to the actuator is derived.

The only difference between the system presented in Figure 1 and a typical position-servo controller is the addition of the feedback link (A) to the anatomical joint. This feedback link mechanically constrains the anatomical joint in such a manner that x(t) is restricted to values within a small range around y(t). Noting that x(t) is determined by user's motor intent, this relationship can be expressed as

$$x(t) = \begin{cases} y(t) - \varepsilon\,;\, F_x[m(t)] < y(t) - \varepsilon \\ F_x[m(t)]\,;\, y(t) - \varepsilon \leq F_x[m(t)] \leq y(t) + \varepsilon \\ y(t) + \varepsilon\,;\, F_x[m(t)] > y(t) + \varepsilon \end{cases} \quad [1]$$

where $\epsilon > 0$ and $F_x[m(t)]$ is the functional relationship between x(t) and m(t). This relationship is shown in Figure 2.

Without the feedback link (A), the anatomical joint would be free and x(t) could take on any output compatible with the user's motor intent and the characteristics of the physiological control system associated with that specific joint. This relationship could be represented by the dashed lines in Figure 2. Without feedback link (A), the difference between the actual prosthesis position and the position of the physiological joint controlling it would differ over a range determined by the relative responsiveness of the physiological and mechanical systems, and environmental influences such as prosthesis loading. Without link (A) the system would be a typical position-control system. The fundamental result of that condition would be that the prosthesis user would have to either directly attend to prosthesis function (or rely on incidental feedback) to be aware of the position and velocity of the prosthesis at all times. However, because of the constraint imposed by the feedback link, the user is able to directly relate all of the proprioceptive sensations associated with the control of the physiological joint (from which x(t) is derived) to the position and motion of the prosthesis function (from which y(t) is derived). Some difference may exist due to the linkage rela-

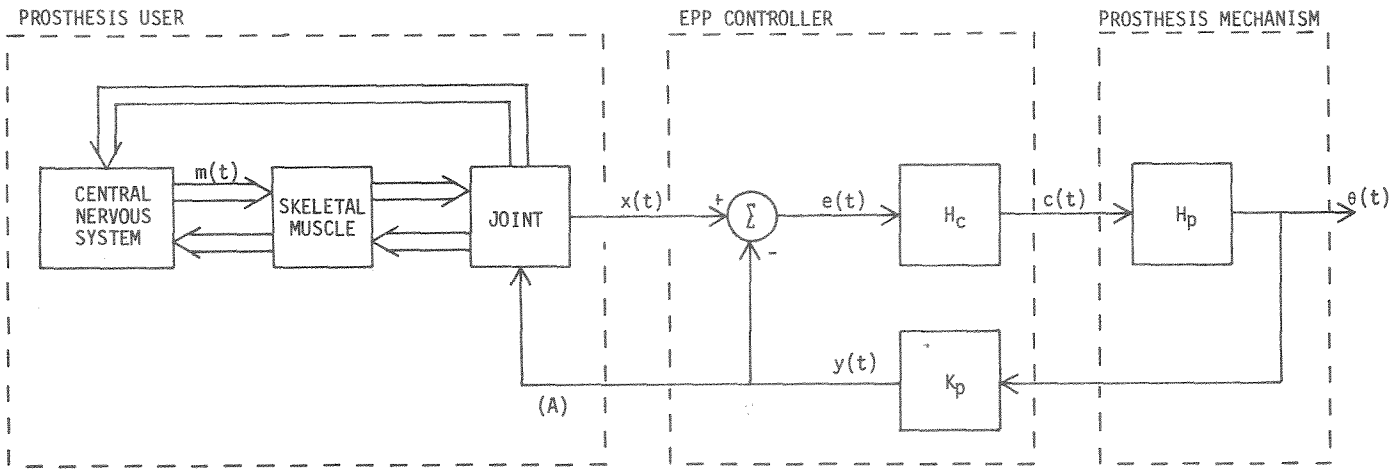

FIGURE 1
System model of an EPP position-servo prosthesis control system. With this system, the control signal driving the prosthesis mechanism, e(t), is derived from the difference between x(t), the position of an anatomical joint, and y(t), the scaled prosthesis output position. The feedback link (A) to the anatomical joint constrains x(t) to values within $\pm\epsilon$ of y(t), as shown in Figure 2. In this model, m(t) represents the prosthesis user's motor intent.

FIGURE 2
Constraint imposed by the position feedback link (A) in Figure 1. The feedback link constrains anatomical joint position, x(t), to values within $\pm\epsilon$ of y(t), the scaled prosthesis output position. When within $\pm\epsilon$ of y(t), x(t) is a function of m(t), the prosthesis user's motor intent. The dashed lines indicate the relationship that would exist without the feedback link.

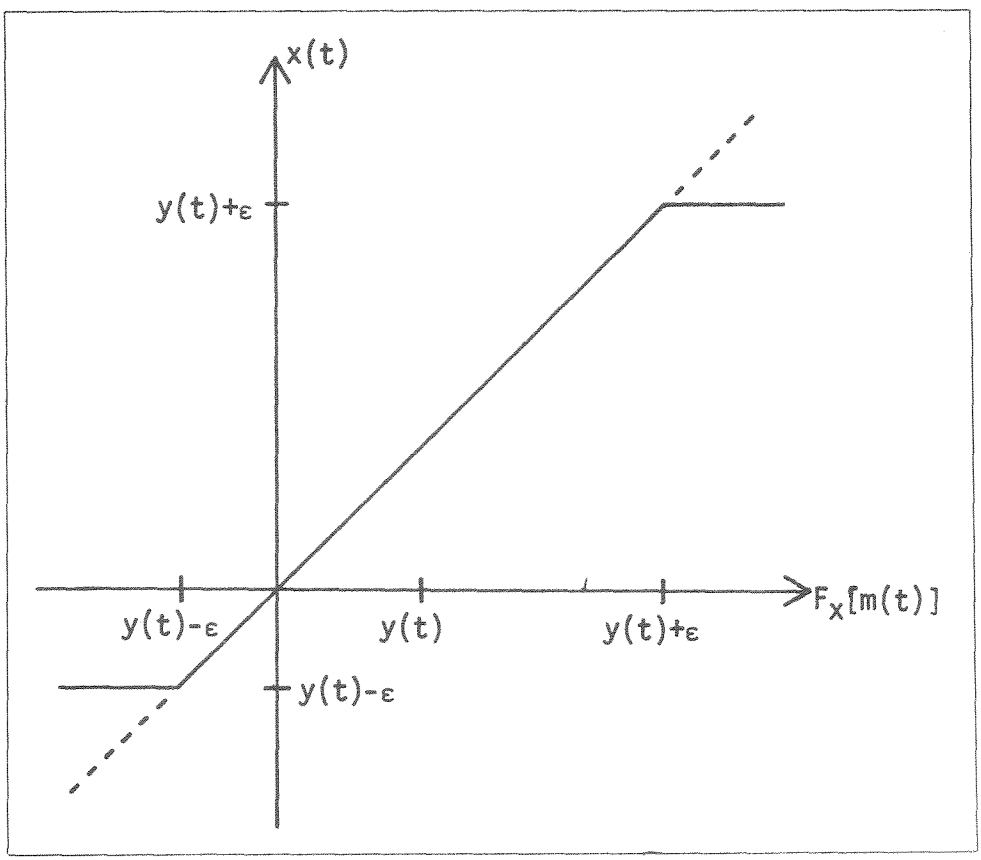

tionship defined by ϵ. Clearly it would be desirable to keep ϵ as small as possible to make the relationship between the controlling anatomical joint and the controlled prosthesis joint as intimate as possible.

Initially in this study it was planned to implement EPP control based on the system model presented in Figure 1. However, a fundamental problem with that approach was soon identified. Whereas the fundamental concept of EPP control calls for direct coupling of prosthesis joint position to physiological joint position, in the system in Figure 1 it is necessary to intentionally design the system in such a manner that a difference between the input and output positions can exist. In a system employing simple on-off control of the prosthesis actuator, that problem does not seem particularly significant. Such control could probably be effectively implemented using limit switches that are activated whenever the difference between the input and output approaches $\pm\epsilon$. The optimal design would be to make ϵ as small as possible to maintain the intimacy between input and output, yet large enough to provide an adequate dead zone to avoid limit cycle behavior.

Some of the electrically powered prosthesis components currently available are sufficiently responsive as to make the use of proportional control necessary. To achieve proportional control of the actuator in this system, m(t) must be such that x(t) lies in the linear response range of Figure 2, i.e.,

$$y(t) - \varepsilon \leq F_x[m(t)] \leq y(t) + \varepsilon \qquad [2]$$

While previously it was specified that ϵ should be made as small as possible to maintain intimacy between input and output, the proportionality of control realized with this system would probably be improved by increasing ϵ, which determines the range of input signals which provide proportional control. Note also that in the ϵ error range, the user's input would not be directly coupled to the output. Thus the user would be required to generate the proportional control signals without being able to feel how the prosthesis was responding.

The system diagram of an improved implementation of EPP position-servo control that eliminates the problem just discussed is shown in Figure 3. In this system, joint position x(t) is constrained by prosthesis actuator position y(t) as in the first system discussed. However, the input signal to the actuator controller H_c is not derived from the difference between x(t) and y(t), but rather is a signal derived from the force generated within the mechanical linkage between x(t) and y(t) when the anatomical joint specifying x(t) is restrained from achieving the desired output position specified by m(t). This force, denoted $T_{x,m}(t)$ in Figure 3, is derived from forces arising from the contraction of the joint musculature, denoted by $f_m(t)$, and can be considered to be a function of the difference between desired joint position, specified by $X_d[m(t)]$, and actual joint position, x(t), i.e.,

$$T_{x,m}(t) = F_T\left[X_d[m(t)] - x(t)\right] \qquad [3]$$

Based upon the linkage relationship between x(t)

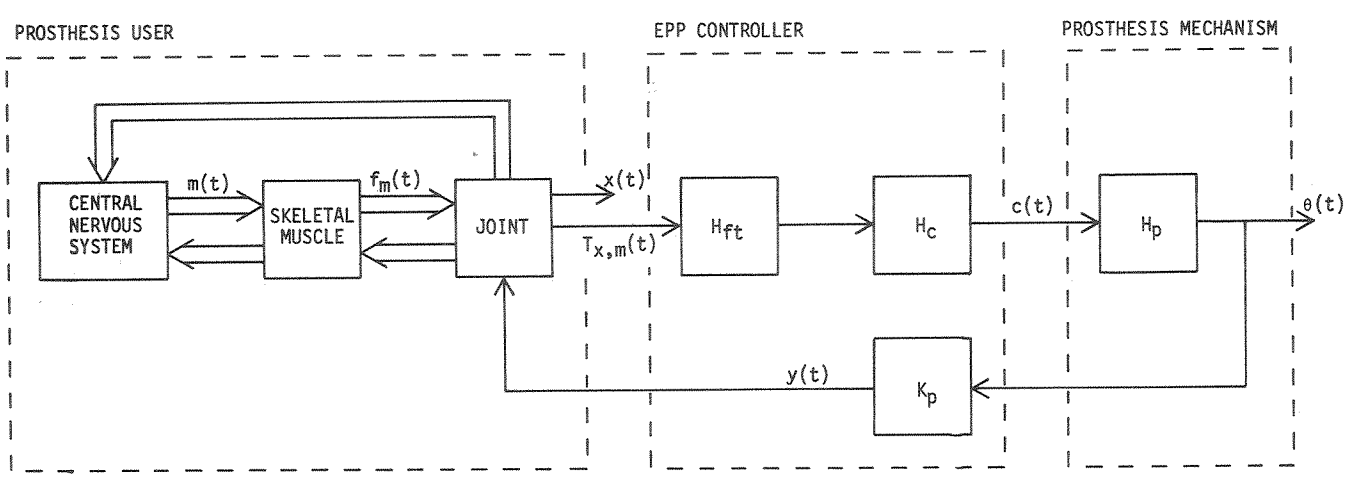

FIGURE 3
System model of the improved EPP prosthesis control system implemented in the experimental prosthesis built for this study. With this system, $T_{x,m}(t)$, the control signal driving the prosthesis is derived from the force generated within the mechanical linkage coupling anatomical joint position x(t) and the scaled prosthesis joint position y(t), when the anatomical joint is restrained from achieving the desired output function specified by m(t), the user's motor intent. The expression $f_m(t)$ represents the forces generated by the skeletal muscle in response to m(t).

and y(t) specified in Equation [1], in which x(t) is contrained to a value within $\pm\epsilon$ of y(t), the control loop for this system would be configured such that the prosthesis actuator responds in a manner that tends to minimize the difference between $X_d[m(t)]$ and x(t), and thus drives $T_{x,m}(t)$ to $F_T[0]$. An interesting aspect of this system is that although x(t) is the control variable that directly specifies the system output position, it does not appear as a direct system input. The role of x(t) is implicit in its relationship with m(t) in determining $T_{x,m}(t)$, and in its constrained relationship with y(t). Note also that $F_T[0]$, the equilibrium tension level about which the system operates, does not have to be equal to zero, as will be seen later.

The fundamental advantage of the system shown in Figure 3 is that, through proper design, ϵ could theoretically be made equal to zero, i.e., the input and output could be directly linked. Thus the user would be able to relate the position and velocity of the prosthesis output to proprioceptive sensations at all times, with no built-in error range.

It is interesting to note that the system presented in Figure 3 functions in a manner similar to that of a natural limb, as both are force-driven systems. Just as a person contracts his muscles to generate forces to move his limbs, the user of the prosthetic system would move his prosthesis by generating forces in his residual musculature. Note also that the user would be able to relate the force he was exerting to the velocity of the prosthesis response through proprioceptive sensations. Due to the dynamic response characteristics of the prosthesis mechanism, the force/-velocity relationship would vary with prosthesis loading, a situation analogous to physiological motor control. Thus the user would be able to sense prosthesis loading in what should be a natural manner.

EPP control systems developed by Simpson and co-workers (4, 5, 6) and Carlson and co-workers (7, 8), respectively, combine elements of both of the system models presented in this discussion. Both of their systems utilized the error between input position and output position as the input signal to the actuator controller, and both implemented proportional control of the actuators.

Simpson's system was pneumatically powered. When the user's input exceeded the allowed input error range, he pressed against valves controlling the pneumatic actuator. The valve assemblies were coupled to the prosthesis mechanism, moving with it to establish new equilibrium positions. Proportional output control was provided. The harder the valves were pushed, the greater the resulting valve displacement and the pneumatic pressure provided, and thus the greater the output response. Although the precise position relationship between the input and output in that system would vary somewhat due to valve motion relative to the system coupling, the user was coupled to the output whenever in contact with the valves, and thus could probably detect changes in feedback pressure and valve motion and relate those sensations to prosthesis movement. That system, although technically position-dependent, has much of the same feedback characteristics as the force-driven system model described here.

In Carlson's EPP controller for an electric elbow, the difference between input and output positions was indicated by the output of a linear potentiometer, which provided a proportional signal for actuator control. The transducer used had a restoring spring which may have provided perceptible feedback pressure throughout the range of proportional control, thus coupling the input and output in a manner similar to Simpson's system.

In the experimental prosthesis built for this study, EPP control was implemented in a manner based directly on the force-driven position-servo model presented in Figure 3. The EPP position-servo relationships were implemented by providing direct cable linkages between the prosthesis actuators and a shoulder-motion transduction mechanism. The actuator control signals were derived from force transducers attached to these cables.

DESIGN OF EXPERIMENTAL EPP PROSTHESIS

EPP Prosthesis Mechanism

A photograph of the experimental prothesis built for this study is shown in Figure 4. A Liberty Mutual elbow and a Northwestern University wrist rotation unit were the powered components used in this system. The prosthesis mechanism was supported by metal straps attached to a plastic body jacket. The body jacket and support system were constructed to allow unrestricted movement of the shoulder ipsilateral to the prosthesis mechanism, while maintaining the mechanism in a fixed position relative to the thorax. The linkage cables for implementing EPP position-servo control relationships were connected at one end to pulleys fixed over the axes of rotation of the prosthesis elbow and wrist components, respectively. The other ends of these cables were routed to the prosthesis shoulder motion transduction system.

Through an iterative design process, a simple approach to shoulder motion transduction was found, based on the use of an intimately fitting cap placed over the shoulder. The linkage cable to

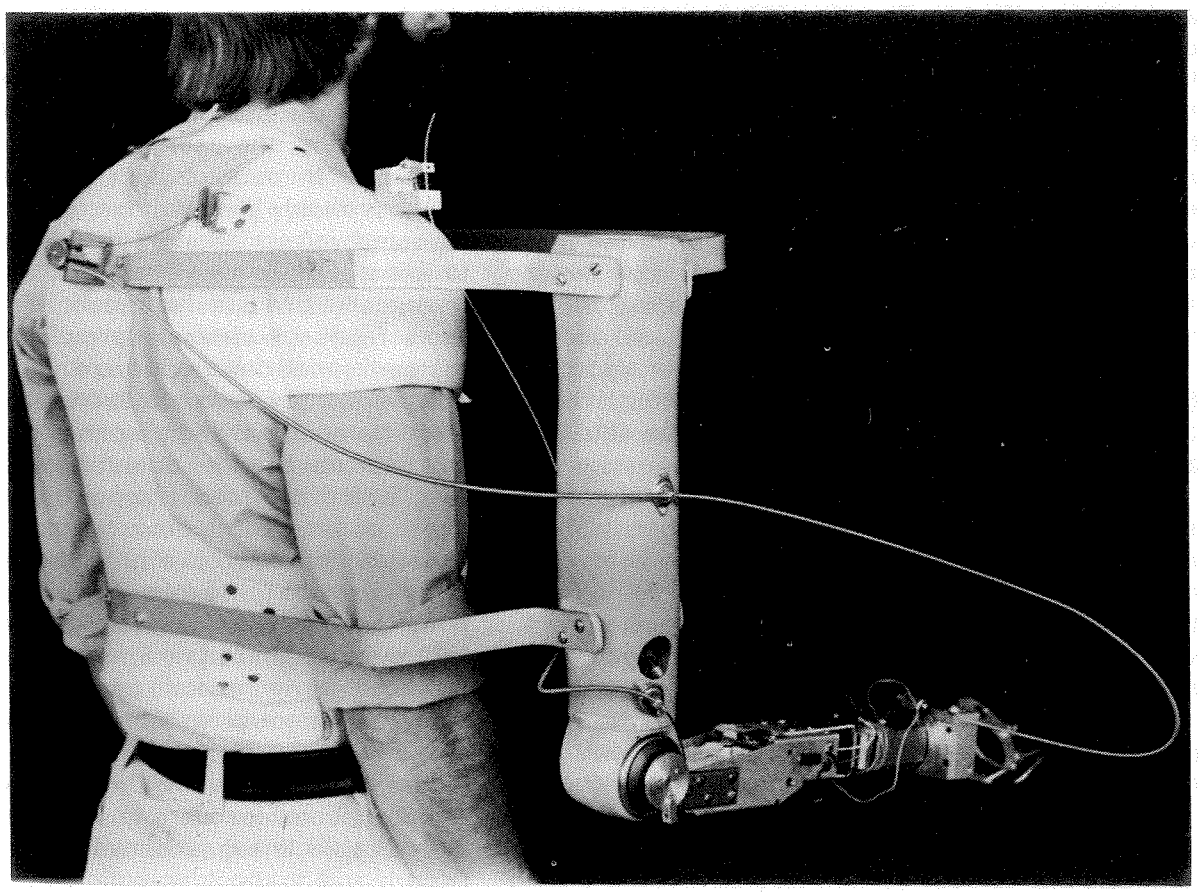

FIGURE 4
The experimental prosthesis on a test subject. Shoulder elevation controls the Liberty Mutual Elbow through the strain beam on the shoulder cap. The user's shoulder protraction-retraction controls the wrist rotator through the cable system shown. The strain beam is part of the pulley mechanism for the cable, visible on back of subject.

the elbow was attached to a strain-gage-instrumented load beam mounted directly on the cap. The linkage cable to the wrist was routed through a strain-gage-instrumented pulley mechanism and fastened to the back of the cap. This approach to shoulder motion transduction proved to be quite effective, allowing the user to faciliate the separation of the elbow and wrist control inputs by adapting his shoulder motion to the geometry of the linkage relationships.

The load-beam force transducers used in the system were instrumented with semiconductor strain gages. Based on a cantilever structure, the load beams were designed to function effectively for forces up to 200 N, although the actual forces associated with prosthesis control were much less. The gages were connected in a bridge configuration and the amplified outputs used to generate proportional actuator-control signals.

Both of the pulleys used in the control linkages had cable seating diameters slightly less than 1.5 inches (3.81 cm). Thus 135 degrees of elbow flexion, the normal range of motion of the Boston elbow, was mapped into approximately 1.75 inches (4.45 cm) of shoulder elevation-depression and 180 degress of wrist rotation was mapped into approximately 2.35 inches (5.97 cm) of shoulder protraction-retraction. Subjects using the system had no problem generating sufficient shoulder elevation to achieve the full range of elbow motion. It was somewhat difficult, however, for the subjects to generate sufficient excursion to achieve 180 degress of wrist rotation. Future systems will be configured to allow more wrist displacement with less shoulder displacement.

EPP Prosthesis Control Relationships

The control signals specifying prosthesis elbow function were determined by the tension in the cable linking shoulder elevation-depression to elbow flexion-extension, as indicated by the output of the load beam to which the cable was attached. To hold the elbow at a specific position, the user had to maintain a set tension level in the linkage cable. The linkage geometry was such that, if the user attempted to elevate his shoulder, he pulled

on the cable, increasing the tension. The increased tension in the linkage cable elicited a control signal that caused the elbow to flex. As the elbow flexed, the length of the cable relative to shoulder elevation-depression position increased as it unwound from the pulley at the elbow. The user could continue elbow flexion by elevating his shoulder as the elbow flexed, thus maintaining increased tension in the cable. When the user stopped elevating his shoulder, the tension in the linkage cable rapidly decreased to the equilibrium level and the elbow stopped at a position directly determined by shoulder position. A small dead zone implemented in the controller allowed the tension in the linkage cable to vary somewhat without eliciting a response.

If the user allowed the tension in the linkage cable to drop below the equilibrium-tension level by relaxing or slightly depressing his shoulder, a control signal was generated causing the elbow to extend. As the elbow extended, the length of the cable relative to shoulder elevation-depression position decreased as it wrapped around the elbow pulley. The user could continue elbow extension by depressing his shoulder as the elbow extended, maintaining the decreased tension level in the cable. When the user actively checked shoulder depression, the tension in the cable rapidly increased to the equilibrium level and the elbow once again stopped, at a position directly determined by shoulder position.

One way of conceptualizing this control system is to consider it a type of power-assist system. In order to flex the elbow, the prosthesis user must pull on the linkage cable. The tension he produces in the cable specifies the control signal that in turn gives rise to the drive torque that flexes the elbow. As the user elevates his shoulder with elbow flexion, he is in a sense pulling the elbow up, with the control system acting as a force amplifier.

Referring to the system model presented in Figure 3, this control relationship corresponds to a case where $F_T[0]$ in Equation [3] is not equal to zero, i.e., the system operates around a nonzero equilibrium force level. Thus the user must maintain a specific cable tension level to maintain the elbow at a specific flexion angle. This might be expected to become tiring, but laboratory experience indicated otherwise. It is interesting to note that the physiological elbow functions in a similar manner.

Control of prosthesis wrist rotation was effected in a manner directly analogous to that implemented for control of the prosthesis elbow. As for elbow control, to hold the wrist at a specific position the user had to maintain a set nonzero tension level in the linkage cable. The linkage geometry was such that, if the user attempted to protract his shoulder, the tension in the control cable increased and a control signal was elicited that caused the wrist to pronate. As the wrist pronated, the length of the control cable increased relative to shoulder protraction-retraction position. The user could continue wrist pronation by protracting his shoulder as the wrist pronated, maintaining the increased tension level in the cable. If the user stopped protracting, the tension in the linkage cable rapidly decreased to the equilibrium level and the wrist stopped at a position directly determined by shoulder position. Control of wrist supination using shoulder retraction was analogous, simply reversing the process.

With the position-servo controllers implemented, it was possible for the user to depress his shoulder faster than the prosthesis elbow could extend, or he could retract his shoulder faster than the prosthesis wrist could supinate. When such a situation occurred, the linkage cable slackened and the precise relationship between shoulder position and prosthesis position was lost. The response of the control system to such a situation was to generate control signals causing the prosthesis to respond at maximum velocity until it "caught up" with the shoulder, as indicated by the tension in the linkage cable. Although the position-servo relationship could be "beaten" in one direction, the user could always reestablish the relationship at any time by taking up the slack in the linkage cables. As long as the user maintained any nonzero tension in the linkage cables, he remained linked to the prosthesis through proprioceptive sensations.

This control scheme was felt to be an efficient and effective means of implementing EPP control relationships. It was not felt that sufficient functional improvement would result from implementing linkages that actively checked shoulder depression and retraction, as well as elevation and protraction, to warrant the added complexity of such an interface mechanism.

For prosthesis elbow control, the actuator controller had an equilibrium tension level, $F_T[0]$, of approximately 20 N. Modulation of the linkage cable tension, through a range of approximately 35 N centered about the equilibrium level, yielded the full range of actuator control signals. For prosthesis wrist control, the actuator controller had an equilibrium tension level, $F_T[0]$, of approximately 10 N. Modulation of the linkage cable tension, through a range of approximately 10 N centered about the equilibrium level, yielded the full range of actuator control signals. Small response dead

zones were implemented about the equilibrium tension levels in each of the controllers.

Experimental Velocity Controlled System

To gain further insight into the effectiveness and advantages of EPP control, velocity control of the experimental mechanism was also implemented. The velocity controlled system was essentially equivalent to the EPP controlled system except that the EPP linkage cables to the prosthesis elbow and wrist were removed and replaced by cables that were anchored to the humeral section of the prosthesis. In this system, the signals controlling actuator function were still derived from the tension in these cables. However, because the cables no longer linked prosthesis position to physiological joint position, the tensions in the cables were solely a function of force exerted by isometric contraction of the joint musculature. Referring to Figure 3, the modification made in implementing velocity control is equivalent to opening the system feedback loop between the prosthesis mechanism, H_p, and K_p in the prosthesis controller. It was felt that opening the feedback loop in this manner would make it possible to effectively ascertain the relative effects of EPP control on prosthesis function through comparison with open-loop data.

EVALUATION OF EXPERIMENTAL SYSTEM

To evaluate the effectiveness of EPP control, as implemented in the experimental prosthesis, one- and two-dimensional random tracking experiments were performed analogous to those performed in analyzing physiological control of the elbow and wrist. Several brief blind-positioning experiments were also performed. For comparison purposes, equivalent experiments were performed using velocity control of the same prosthesis mechanism.

All of the data presented in this section were obtained from the same subject, who first performed all of the experiments with the EPP-controlled system and then repeated the experiments using the velocity-controlled system. This subject also performed equivalent experiments with his physiological elbow and wrist, making it possible for the investigators to compare prosthesis performance directly with physiological performance. Several other subjects evaluated the prosthesis on a qualitative basis.

Evaluation Procedure

In these experiments, the subject monitored task performance via an oscilloscope display on which a circle target and crosshair follower were presented. Potentiometers attached to the experimental prosthesis were interfaced to effect goniometers providing output signals linearly related to prosthesis elbow and wrist angular position. During experiments, these signals controlled the position of the follower in the system display in one or two dimensions, depending on the experimental task. In all of these experiments, the goniometer and display-gain characteristics were precisely the same as those used for the analogous physiological experiments.

The specific procedure followed in performing the random tracking experiments with the experimental prosthesis was directly equivalent to that followed for random tracking with the physiological elbow and wrist described in detail in Doubler and Childress (3). One-dimensional tasks were performed in which target motion along the display X-axis was tracked with prosthesis wrist pronation-supination and along the display Y-axis with prosthesis elbow flexion-extension. Two-dimensional tasks were performed in which target motion was tracked in the X-Y plane with both prosthesis functions simultaneously. The same continuous, low-pass-filtered, random-input signals were used to control target motion in these experiments as were used in the previous tracking experiments.

Prosthesis tracking was limited by the dynamic

response characteristics of the powered components, which in turn were affected by loading. No terminal device was attached to the prostheses during these experiments and thus, essentially, no external load was seen by the wrist. The load seen by the elbow consisted of the forearm, wrist unit, and wrist goniometer. An analysis of the dynamic capabilities of the components used in this system (Doubler (9)) showed that the maximum velocity of the wrist unit was 1.2 rad/sec. The maximum velocity of the elbow under test conditions was 1.3 rad/sec. An analysis of the wrist and elbow as components in a simple closed-loop position-servo system showed that the wrist had the capability to very accurately track input signals with cutoff frequencies up to 1 Hz. The results for the loaded elbow were similar.

The random tracking experiments centered on analyzing a person's ability to control his physiological upper limb based on the performance of closed-loop manual-control tasks. In those tasks, the control loop was closed by visually monitoring the system output. A fundamental premise of this study is that the wealth of proprioceptive feedback inherently provided by EPP prosthesis control alleviates some of the necessity for visual monitoring that exists with current prosthesis control techniques. It is not assumed that EPP control will completely eliminate this dependence; a certain amount of visual monitoring is generally necessary for precise control, even of natural upper-extremity function. As part of this study, experiments were performed in which subjects had to control the position of their physiological upper limb or a prosthetic substitute with their vision occluded. The fundamental task in these experiments consisted of attempting to move the prosthesis or physiological joint from a known starting position to various target positions without visually monitoring the motion. Due to the scope of this paper and the limited nature of these experiments, the results will only be discussed in qualitative terms. (For a detailed presentation see Doubler (9)).

Evaluation Results

The data for random tracking with the experimental prostheses were analyzed using the same protocol that had been used in analyzing the data for tracking with the physiological upper-extremity (Doubler and Childress (3)). That analysis approach was based on the "quasi-linear" model for describing tracking performance (see Elkind and Forgie (10)). Several linear parameters, such as the system transfer function and the input-output coherence function, were initially derived and studied in searching for a meaningful and straightforward representation of control performance.

One linear parameter which seemed particularly relevant to this study was the maximum information transmission rate. The subject's task in these experiments was to produce a signal at the system output that matches the input as closely as possible. That task is analogous to transmitting the input information across the channel with as little error as possible. Based on the premise that the effectiveness of prosthesis control is in large part determined by how well the user can communicate his motor intent to his prothesis, information transmission is a concept philosophically aligned with this analysis of prosthesis system performance. The precise relationships and protocol used to derive the information transmission rates in this study are given in Doubler and Childress(3).

The considerably better tracking performance achieved with EPP control of prosthesis function, as compared with velocity control, can be seen in Figure 5, in which the information transmission rates obtained for one-dimensional tracking are plotted as a function of input signal cutoff frequency. For comparison purposes, data obtained for tracking with physiological elbow and wrist motion by the same subject are shown with the data for tracking with the EPP-controlled and velocity-controlled prostheses. The information transmission rates obtained with EPP control exceeded those for velocity control for all tasks, although the difference decreased for the higher frequency inputs. In observing the experiments, it appeared that this decrease was due to performance limitations imposed by the dynamic response characteristics of the prosthesis components.

It is interesting to see that the information transmission rate for tracking with the EPP-controlled prosthesis actually exceeded that for tracking with the physiological elbow for input signals with cutoff frequencies of 0.96 and 1.36 Hz. These results were probably due to the subject adopting a tracking tactic with more nonlinear characteristics when tracking those higher frequency signals with his physiological elbow, which has dynamic capabilities considerably exceeding those of the prosthesis elbow. Analysis of the mean square tracking error for these tasks, derived by summing the square of the difference between input and output signals, was less for tracking with the physiological elbow than for tracking with the prosthesis elbow, supporting this hypothesis.

The total information transmission rates for the two-dimensional tracking tasks performed with the EPP-controlled prosthesis, with the velocity-controlled prosthesis, and with the physiological elbow and wrist are shown in Figure 6. The plotted

values were obtained by summing the information transmission rates for the individual elbow and wrist components of the two-dimensional response. Again, these data clearly indicate the improved tracking performance achieved with EPP control as compared with velocity control.

On a qualitative basis, the results of the blind positioning experiments also indicated the improved control of prosthesis function provided by EPP control as compared with velocity control. This finding was particularly evident for the two-dimensional blind positioning tasks, in which the subject was required to position both the prosthesis elbow and the wrist simultaneously.

In the two-dimensional experiment for velocity control (blind positioning), the subject relied heavily on incidental feedback, such as motor vibration and noise, in controlling and sensing the position of the prosthesis. However, the prosthesis wrist ran much more quietly than the elbow; during two-dimensional experiments, the elbow noise masked that from the wrist and the subject often had difficulty knowing if the wrist was running and in what direction it was moving. That effect proved to be very frustrating and led to large response errors.

No such problem was indicated for two-dimensional blind positioning with EPP control. It was

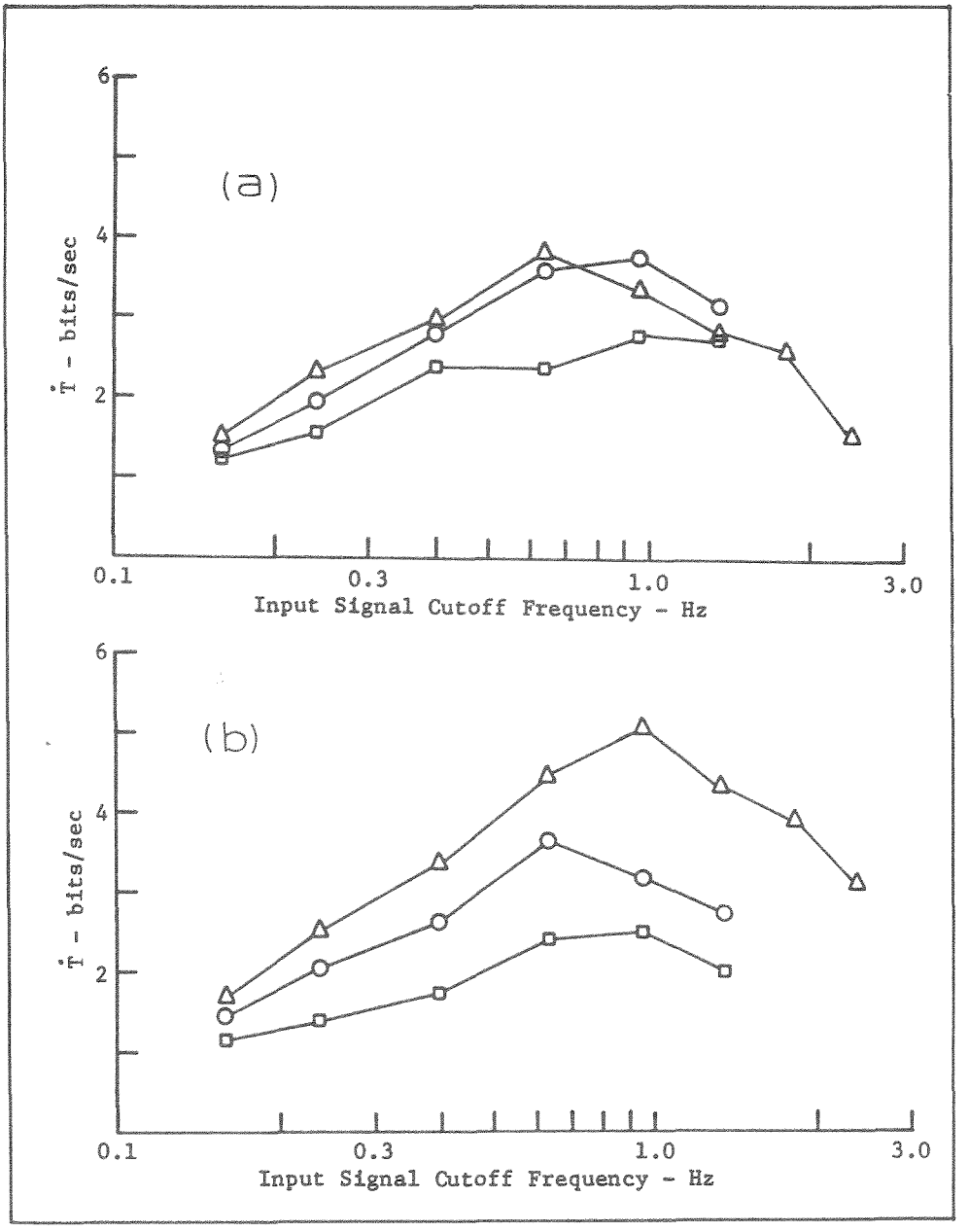

FIGURE 5a
Comparison of information transmission rates for one-dimensional tracking tasks performed by the same subject with the EPP (○) and velocity (□) controlled prosthesis elbow and with the physiological elbow (△).

FIGURE 5b
Comparison of information transmission rates for one-dimensional tracking tasks performed by the same subject with the EPP (○) and velocity (□) controlled prosthesis wrist and with the physiological wrist (△).

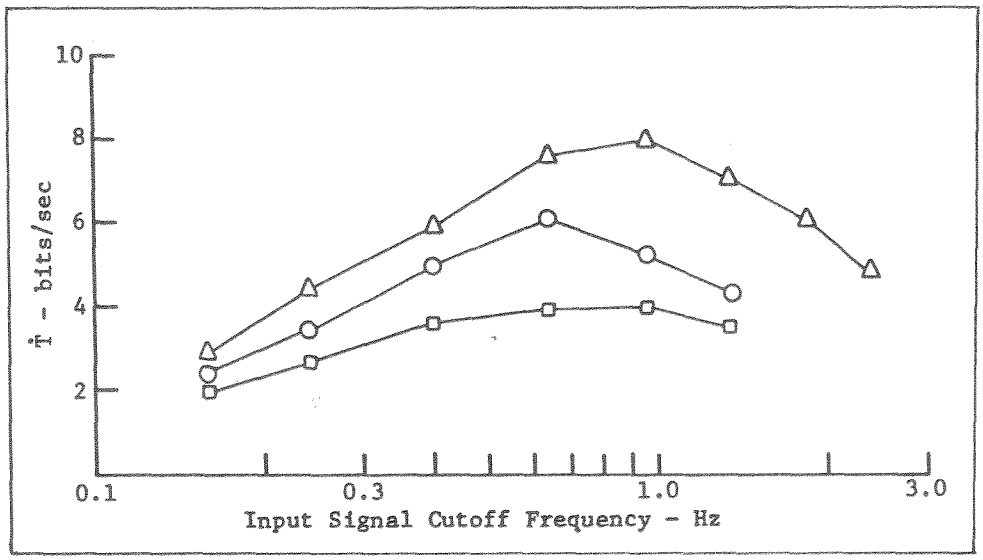

FIGURE 6
Comparison of the total information transmission rates for two-dimensional tasks performed by the same subject with the EPP (○) and velocity (□) controlled prostheses and with the physiological elbow and wrist (△). These data were derived by summing the rates for the individual channels in the two-dimensional tasks.

evident that the subject did not have to rely on incidental feedback in controlling prosthesis function with EPP control. This seems to be a very important observation, indicating a significant potential for realizing subconscious control of prosthesis function with EPP control.

It is likely that better results could have been achieved for two-dimensional blind positioning with velocity control by implementing a velocity control system which allowed the user to more easily separate and individually control prosthesis elbow and wrist function. However, the goal in prosthesis design is to provide effective coordinated control of multiple functions. The results of this study underscore the difficulties implicit in efforts to achieve that goal with open-loop velocity control of function.

Qualitative Analysis of Control

Physiologically-based difficulties, associated with producing certain combinations of shoulder protraction-retraction and elevation-depression positions and motions, influenced tracking ability in certain areas of the tracking plane. Specifically, it was difficult for subjects to simultaneously depress and protract, or elevate and retract, their shoulders. These limitations made it difficult for the subjects to simultaneously extend the prosthesis elbow and pronate the prosthesis wrist, or to flex the elbow and supinate the wrist, with the implemented EPP control system. It seems possible that with exercise and use, a person could develop improved flexibility and range of motion in his shoulder, and so overcome this problem. It may also be possible to achieve better function by altering the control-mapping relationships coupling prosthesis and shoulder function.

In working with the experimental prosthesis, a qualitative attribute of EPP control that was very obvious was the inherent stability of prosthesis control and function. Because the subjects were not accustomed to independently generating the shoulder movements used in controlling the system, there was some interaction between the controlling motions, and thus some coupling between the prosthesis functions, when a subject first tried operating the prosthesis. At no time, however, was system stability a problem, as it could have been in an open-loop system. Because the output positions of the prosthesis components were directly linked to shoulder position, even if there was considerable coupling between functions there were never any problems with stabilizing the system or with feelings of uncontrollability.

It was also evident that, with some experience, persons using the system readily adapted their controlling motions to the response characteristics of the prosthesis to effect improved performance. The effectiveness of the shoulder motion transduction mechanism used clearly resulted from allowing the user to facilitate the separation of the elbow and wrist control inputs by adapting his shoulder motion to the geometry of the linkage relationships.

As has already been mentioned, if the prosthesis user depressed or retracted his shoulder rapidly, he could violate the EPP linkage relationship which coupled prosthesis position to physiological joint position. It was observed that, in attempting to track input signals with high cutoff frequencies, the subjects at times did indeed move their shoulders faster than the prosthesis components could

respond, causing the linkage cables to go slack. There was no indication, however, that this aspect of the implemented EPP control relationships affected system controllability. Again it seems reasonable that, in normal use, a person would quickly adapt to how fast the components could respond, and would not often feel a need to exceed those capabilities.

DISCUSSION

There is much yet to be done to make the experimental system presented here into a practical system. It appears, however, that the force-driven control configuration developed and implemented for that system has significant potential for practical application. The use of cable linkages to couple residual physiological joint motion to prosthesis function is a design attribute directly compatible with the current expertise of the prosthetics industry. Force transducers of the type used in the experimental system could almost certainly be made small and rugged enough for use in a practical system. A simple switch configuration could be used in place of a force transducer, to implement on/off control of prosthesis function which would be adequate for powered components with low dynamic response.

The most significant problem associated with the practical implementing of EPP control appears to be the construction of comfortable and cosmetic harness and socket arrangements that provide sufficient support for the prosthesis mechanism and effective EPP coupling between residual joint motion and prosthesis function. The trend in recent prosthesis development has been towards self-contained, self-suspended systems that minimize harnessing requirements and are generally more comfortable and easier to don and doff. In contrast, it seems that significant harnessing requirements are an inherent aspect of EPP control.

Terminal-Device Control

A topic not previously addressed in this discourse is the manner of effecting terminal-device control in a system utilizing EPP control. Effecting terminal-device control requires another control source or site. In a system for shoulder disarticulation amputees in which both elevation-depression and protraction-retraction of the shoulder ipsilateral to the amputation site are coupled to prosthesis function in EPP position-servo relationships, terminal-device control based on physiological motion would probably require involving the contralateral upper-extremity, or the use of a physiological motion not normally associated with upper-extremity function, such as chest expansion. Terminal-device control effected in this manner would also complicate the already significant harnessing requirements.

Note, however, that the parameter of interest in terminal-device control is generally not position, but rather prehension or grasping force. Based on that premise, and on the principle of myoprehension (Childress et al (11)), the use of myoelectric control for terminal device operation may be particularly effective and appropriate for use in a prosthesis in which EPP control is implemented for the other functions. Although the ipsilateral shoulder musculature is already involved in the EPP control scheme, it seems likely that some type of

3-state myoelectric control scheme based on muscle activity from the ipsilateral side (e.g. using residual deltoid) could be implemented. If the myoelectric signal electrodes were incorporated in the prosthesis socket, no additional harnessing would be required.

Although the emphasis throughout this study has been on the application of EPP control in prostheses for shoulder disarticulation amputees, it could also prove quite effective in systems for above-elbow amputees. EPP control of elbow flexion could significantly aid above-elbow amputees who have difficulty generating sufficient force or cable excursion for conventional cable-operated control. EPP control would also eliminate interaction between terminal device and elbow operation inherent in the conventional dual-control system. A system combining EPP control of elbow flexion with myoelectric terminal-device control derived from the biceps and triceps represents an aesthetically pleasing, practical, and potentially effective prosthetic system for above-elbow amputees.

CONCLUSION

The experiments described in this paper clearly demonstrated the improved control effectiveness that can be achieved with EPP control as compared to velocity control of prosthesis function. Based on the experience of this study, the authors believe that EPP position-servo control has significant potential as a practical means of achieving natural, effective control of externally powered prostheses ■

REFERENCES

1. Simpson DC: The control and supply of a multimovement externally powered upper limb prosthesis. Proc 4th Int Symp External Control of Human Extremities. Yugoslav Committee for Electronics and Automation, Belgrade. pp. 247–254, 1973.
2. Simpson DC: The choice of control system for the multi-movement prosthesis: Extended physiological proprioception (EPP). **In:** The Control of Upper-Extremity Prostheses and Orthoses (P. Herberts et al. eds) Springfield, Illinois, C.C Thomas, pp. 146–150, 1974.
3. Doubler JA and Childress DS: An analysis of extended physiological proprioception as a prosthesis control technique. J Rehabil R&D, 21(1), 1984.
4. Simpson DC: An experimental design for a powered arm prosthesis. Health Bull Scottish Home and Health Dept. 23(4):75–78, 1965.
5. Simpson DC: An externally powered prosthesis for the complete arm. Biomed Eng 4:106–110,119, 1969.
6. Simpson DC and Kenworthy G: The design of a complete arm prosthesis. Biomed Eng 8(2):56–59, 1973.
7. Carlson LE: Position Control for Above-elbow Prostheses. Final Report VA Contract V101(134)P–561, 1980.
8. Carlson LE and Primmer KR: Extended physiological proprioception for electric prostheses. Preprint of paper presented 6th Int Symp on External Control of Human Extremities. Dubrovnik, Yugoslavia, 1978.
9. Doubler JA: An analysis of extended physiological proprioception as a control technique for upper-extremity prostheses. Ph.D. Dissertation. Northwestern University, Evanston, Illinois, 1982.
10. Elkind JI and Forgie CD: Characteristics of the human operator in simple manual control systems. IRE Trans Automatic Control. AC-4, pp. 44–55, 1959.
11. Childress DS, Billock JN, Hajost MJ: Non-complex myoelectric control concepts for below-elbow, above-elbow, and shoulder-disarticulation amputees. Proc 28th ACEMB, New Orleans. p. 32, 1975.