Veterans Administration

(To be inserted on page 63, top right of the July 1986 Journal)
This article was inadvertently published with typesetting errors. Please see Vol. 23, No. 4 (October 1986) for Errata. A corrected reprint has been mailed to all subscribers along with the October 1986 Journal. Additional reprints will be sent upon request.

Journal of Rehabilitation Research
and Development Vol. 23 No. 3
Pages 63–76

Development of a modular wheelchair cushion for spinal cord injured persons

MARTIN FERGUSON-PELL, Ph.D; GEORGE VAN B. COCHRAN, M.D., M.Sc.D.;
VINCENT R. PALMIERI; JOHN B. BRUNSKI, Ph.D.
Rehabilitation Engineering Unit, Orthopaedic Engineering and Research Center, Helen Hayes Hospital, West Haverstraw, NY 10993; Biomedical Engineering Department, Rensselaer Polytechnic Institute, Troy, NY 12818

Abstract—This paper discusses a modular wheelchair cushion system intended for patients at moderate or low risk for developing pressure sores. With the use of components with different mechanical and physical properties the modular cushion produces improved performance compared with cushions comprising the individual components alone. In addition to achieving clinically acceptable interface pressures, this approach to wheelchair cushion prescription helps to accommodate individual preferences associated with stability, temperature dissipation, and resiliency. Mechanical tests were performed to demonstrate the underlying principles of the modular cushion. Tests with able-bodied subjects identified specific cushion configurations for different weight groups, offering alternative material configurations that may be selected at the discretion of the therapist or patient.

INTRODUCTION

The effective prevention of pressure sores in tissues overlying the pelvic area is a major concern of individuals with spinal cord injury. Because these serious complications usually develop as a result of sitting, many types of wheelchair cushions have been developed in an attempt to control pressures over bony prominences. A wide range of materials and geometric configurations have been tested, but attempts to design a universally effective cushion have been unsuccessful so far. Clinical experience indicates that the requirements of individuals vary widely and that no single design is likely to suit everyone (6,8,11).

A large group of spinal cord injured persons is at moderate to low risk, and its needs are for an effective, reliable and moderately priced cushion that can be replaced with a minimum of effort. Another group is at a higher risk due to a previous history of tissue breakdown, extensive tissue wasting of the buttocks (7), bony deformities, high-level paralysis, or other factors. In addition, some patients are poorly motivated and may not do well on sophisticated cushions requiring maintenance or adjustment, nor will they follow programs of pressure relief and skin inspection without frequent prompting. Effective pressure sore prevention programs require that both high- and low-risk individuals be identified and that appropriate support surfaces, education, psychosocial training, and followup be provided.

In addition to relief of pressure, many other physical, functional, and aesthetic factors are involved in selecting wheelchair cushions. For example, patients with high lesions are usually concerned with the effect of low-shear compliance on their trunk stability. Many also complain that foam and air-filled cushions do not allow body-heat dissipation, resulting in excessive sweating. The thickness of the cushion is often important both in its effects on stability and access to work surfaces. Therefore each cushion should be seen not only as a pressure-distributing device but also as a support surface that influences function. Cushions should be selected for each individual with these ergonomic considerations in mind.

A prior study introduced a new concept in wheelchair cushion design (4) based on utilization of layers of com-

This study was supported in part by a grant from the Technology and Research Foundation of the Paralyzed Veterans Association, New York State Department of Health, and the Walter Scott and Lyons Foundations. Earlier background work was supported by VA contract #V5244 P-1375. The authors also acknowledge the contributions made to this study by Lawrence H. Trachtman, Center for Technology Applications, Research Triangle Institute, North Carolina, and Mary Cardi, P.T., Helen Hayes Hospital.

ponent materials that, in combination, produce more desirable cushion characteristics than slabs of the materials used individually. This approach suggested design of a modular system allowing ready accommodation of an individual's multiple needs. This system would allow a custom-fit device to be assembled from a selection of component layers. Such a cushion could be used directly for low-risk groups or serve as a basis for custom-fitting procedures for the high-risk individual.

This paper describes the development of a prototype design based on the modular concept. For this work it was anticipated that different material and layer configurations would be required to attain maximum pressure relief for individuals of different weights and body types and that several general groups of cushion types (e.g., foam, gel) would be identifiable. It was also felt that, within groups, cushions with similar pressure-relieving properties could be identified; thus enabling the user to choose the cushion component group that most closely met other functional and personal preference factors, such as stability, heat dissipation, and convenience.

For development of the cushion the study was divided into two sections. The first phase included selection of possible components and completion of an extensive set of laboratory tests to characterize the mechanical properties of these materials alone and in specific layer combinations. The second phase focused on comparison of selected layer combinations (cushion prototypes) in terms of their ability to relieve interface pressure on able-bodied subjects in various weight groups.

Reliable clinical evaluation of cushions is difficult to accomplish fairly. To demonstrate improvement in pressure-sore incidence using a new cushion design requires followup of a large number of patients. Furthermore, placebo effects can yield deceptively promising results. Measurement of interface pressure and other parameters is useful in comparing the relative performance of different cushions for an individual or well-defined population. However, the relationship between these measurements and pressure-sore incidence is unknown at present; it is the subject of much debate among researchers in the field. This study was not undertaken to determine whether the modular concept reduces pressure sore incidence, but to provide the user with a choice between cushions with different physical characteristics having a capacity to relieve pressure that is comparable to many commercial cushions currently available.

OVERALL DESIGN CHARACTERISTICS

The design concept of the cushion utilizes certain general criteria. It should be noted that this system makes use of combinations of three classes of materials ordinarily used alone for cushions: foams, Temperfoams, and gels. Water-filled components were also considered as interesting possibilities but were not included in the group of components tested. The generic construction is depicted in **Figure 1.**

Cushion dimensions should be 18 inches or 16 × 16 × 4 inches thick.

Cover should have a support segment (bottom, sides, back) that is smooth, strong, light, flexible, easily cleaned material and is adequate to support and transport the cushion. It should have a body contact segment (top and front surfaces) that is durable, porous, two-way stretch, absorbent, easily cleaned cotton/polyester jersey-type fabric. Its purpose is to provide a cover that is adequate for carrying, as well as contacting body surfaces.

Top layer should be a soft, open cell or reticulated foam (note this layer is omitted when heat dissipators such as gel are used for middle layer) with a thickness of 0.5–1 inch. A denser, easily washable, or disposable material may be selected instead if pressure relief is a critical factor. Its purpose is to encourage air circulation and reduce sitting pressure. Note the underlying middle and bottom layer may be enclosed in a thin, loose waterproof plastic layer if necessary for protection from fluids.

Middle layer should be constructed of various medium- or high-density foams or gel (water-filled components could also be used) and have a thickness of 1-2 inches. Its purpose is to reduce pressure and shear forces and control heat. The qualities of this layer may be selected to suit the most urgent needs of the patient.

Bottom layer should be made of high-density open cell or soft/medium viscoelastic foams and have a thickness of 1-2 inches. Its purpose is similar to the middle layer, but this layer is selected particularly to augment the favorable qualities of the middle layer and offset any unfavorable qualities; viscoelastic foams may be used to improve conformance and reduce pressures.

Base should be a firm expanded foam (Ethafoam) provided with convex undersurface and have a thickness of 1 inch. Its purpose is to accommodate the sling seat sag evident in many wheelchair seats and to provide a flat surface upon which to place other modular component layers; it also provides a standard medium for cutouts, if required.

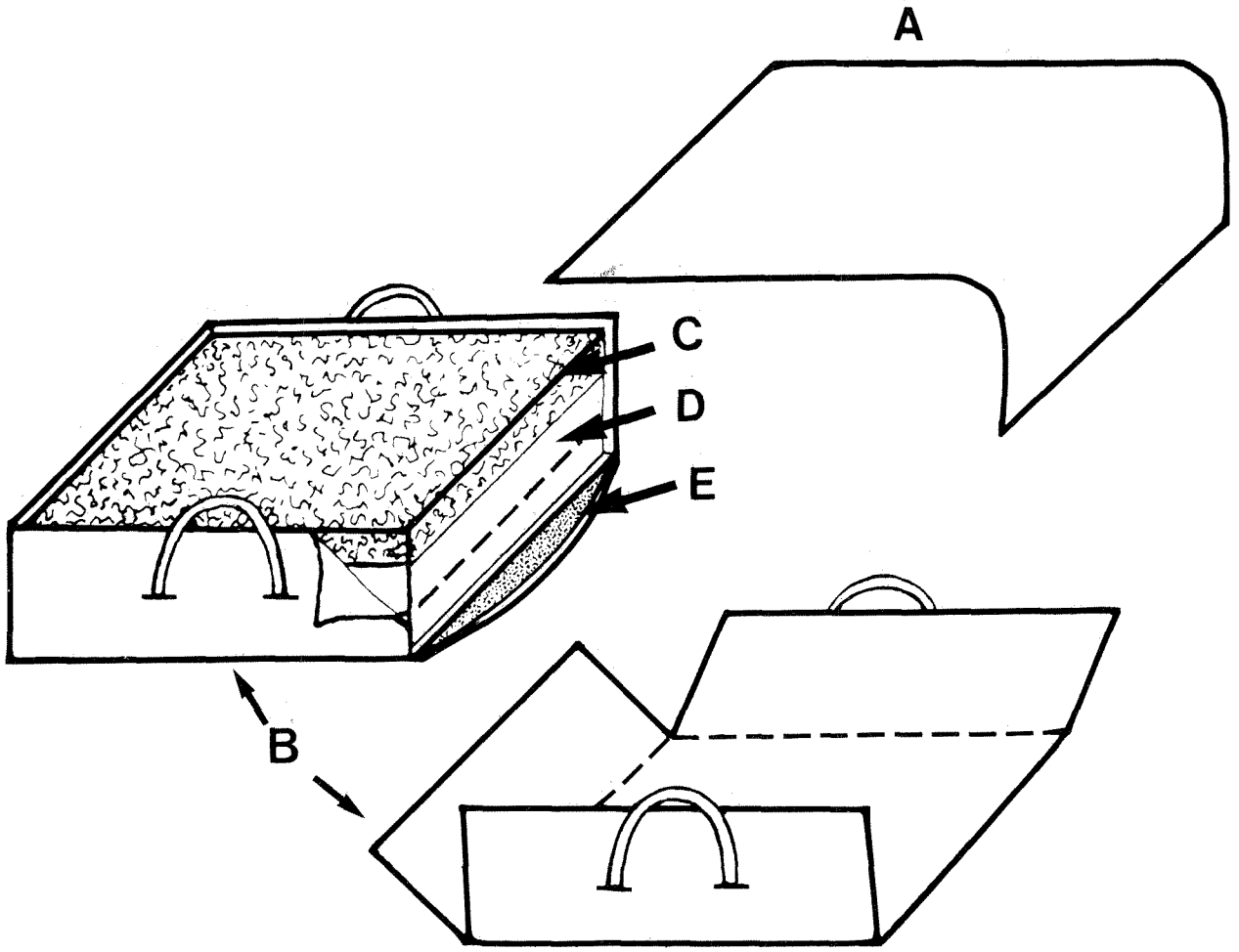

Figure 1
Schematic of modular cushion showing **A:** body contact segment of cover; **B:** support segment of cover; **C:** top layer of support system; **D:** middle and bottom layers; **E:** convex base.

COMPONENT SELECTION AND TESTING

Initially, a wide range of commercially produced urethane foams, viscoelastic Temperfoams, and gels were surveyed; samples were selected from which to make up a trial set of cushion modules for testing. Cushion components used in this study were chosen to reflect a wide range of physical and mechanical properties in commercially available materials. A minimum of four components of each type was selected based on our prior clinical experience. A list of the materials and their sources are given in **Table 1.** After the materials were accumulated they were subjected to a standard series of tests, which are discussed next.

Mechanical Characterization Tests

Uniaxial Compression Testing of Discrete Material: The frist series of mechanical tests was performed to characterize certain standard mechanical properties of these materials and to provide a baseline standard of performance by which to assess the quality and similarity of future batches of materials. Specifically, the Young's modulus and Poisson's ratio as well as time rate of loading characteristics were determined on small samples of each material (**Table 2**).

Samples in the form of blocks (50 $mm^2 \times 25$ mm thick) were cut from bulk samples using a band saw. Parallel plate-loading platens were constructed for compression testing of the specimens; the platens exceeded the size of the material blocks in order to reduce edge effects. A slight compressive load (1.0 N) was ap-

Table 1
Components used to construct all modular test cushions in this study.

Component	Code No.*	Supplier
Medium foam, 2 in	3040	Crest-Foam Corp., Moonache, NJ
Firm foam, 2 in	3570	Crest-Foam Corp., Moonache, NJ
Firm foam, 1 in	3570	Crest-Foam Corp., Moonache, NJ
Very firm foam, 1 in	N.A.	Stainless Medical Products, San Diego, CA
Medium temper foam, 2 in	164M	Alimed Inc., Boston, MA
Medium temper foam, 1 in	164M	Alimed Inc., Boston, MA
Soft temper foam, 1 in	164S	Alimed Inc., Boston, MA
Half-thickness gel, 1 in	1565	Reston Floatation Pad, 3M Co., St. Paul, MN
Full-thickness gel, 2 in	1565	Reston Floatation Pad, 3M Co., St. Paul, MN
Stryker gel	1540-2	Stryker Corp., 420 Alcott St., Kalamazoo, MI
Reticulated foam	30 pores/in	Rogers Foam Corp., Somerville, MA
Convex base unit,		Alimed Inc., Boston, MA
16 × 18 in	1192	
16 × 16 in	1193	

*Note code no. used for simple foams is according to Rogers foams convention; i.e., 3040 corresponds to a density of 3.0 $lbPt^{-3}$ and ILD (25 percent) of 40. Note Crest-Foam Corp. uses code in reverse order, e.g., Rogers 3040 = Crest-Foam 4030.

Table 2
Mechanical properties of cushion materials in uniaxial compression.

Material	*Young's modulus E, kPa (psi)* $E_{initial}$	$E_{at\ 50\ kPa}$	Poisson's ratio
Foams			
reticulated foam	87.0 (12.6)	740 (107)	0
very low density	24.5 (3.55 psi)	*	0
low density	29.6 (4.29)	610 (88.5)	0
medium density	88.5 (12.8)	567 (82.3)	0
high density	105. (15.2)	575 (83.4)	0
latex foam	14.0 (2.03)	447 (14.8)	0
very high density	122. (17.7)	576 (83.6)	0
Temperfoams			
soft	36.6 (5.31)	891 (129)	0.10†
medium	378 (54.8)	418 (60.6)	0.16
hard	764 (110)	228 (33.1)	0.40

*Foam 1830 compressed > 95 percent before a stress of 50 kPa was reached.
†For Temperfoams, W was approximately constant for e < 20 percent, but thereafter approached zero.

plied to each sample to ensure contact, and when the test was started, a constant deformation rate of 5 mm/min (equivalent to a strain rate of 0.003 s^{-1}) was applied by means of the MTS 810 mechanical test system.

Estimates of Young's modulus, E, (defined as the ratio of engineering stress to engineering strain) were taken from the stress-versus-strain curves obtained experimentally for each sample. Poisson's ratio, $\mathcal{V}$ (defined as the ratio of lateral strain to longitudinal strain) was determined periodically during the test using Vernier calipers to measure lateral strain. Since these materials are known to exhibit highly nonlinear stress-strain characteristics, the use of a single value for Young's modulus or Poisson's ratio is not possible. A simple approximation was therefore made to permit comparison between different materials. Tangent moduli were obtained for the relatively flat initial (phase I) portion of each curve (E_I, $\mathcal{V}_I$) and for the steep (phase III) part of the curve (E_{III}, $\mathcal{V}_{III}$). Due to the nonlinearity of phase II no meaningful single value of E_{II} and $\mathcal{V}_{II}$ can be calculated.

Indentation Tests of Modular Layer Combinations: In the next series of tests, selected combinations of the components were utilized to assess combined performance as a cushion. Based on the layering concept four classes of material combinations were identified for testing:

FF = Combinations of different urethane foam components
TF = Combinations of Temperfoam and urethane foam components
GF = Combination of a gel layer with urethane foam components
GT = Combination of a gel layer with Temperfoam components

Thirty-two cushion prototypes were tested to identify which combinations showed the most promise for a final cushion system **(Table 3)**. Testing was performed on these layer combinations using quasi-static techniques developed by Cochran and Palmieri during a project for the Veterans Administration (4). This work included a comprehensive series of mechanical tests for evaluation

of wheelchair cushions utilizing a deadweight load-indentation device. This early approach was continued for static testing aspects of the present study. On the other hand the time-dependent nature of many cushioning materials requires a highly controlled mechanical testing capability to measure creep, stress relaxation, and load-indentation hysteresis. Accordingly, a hydraulically driven materials-testing machine (M.T.S. 810, Minneapolis, MN) was employed for these aspects.

For the layer combination tests, full-sized samples were indented using a 70 mm diameter indentor. ASTM Standard 1564 (1) recommends the measurement of load at 25 percent and 65 percent compression using a 200 mm diameter indentor (ILD tests); however, we felt that the smaller diameter is more representative of the dimensions of localized load areas on the body such as the ischial tuberosities (4). Preliminary tests measuring cushion deformation with seated subjects indicate that a compression of 40–75 percent represents a range typically produced in practice (10,12).

All prototype cushions were preconditioned by static loading to approximately 25 percent of original thickness (75 percent compression) for 2 hours, then allowed to recover for 10 minutes. This preconditioning cycle is specified by ASTM standards (1,2) for latex and urethane foams; subsequent tests by the authors have confirmed

Table 3
Component combinations tested as complete cushion components.

Cushion + Code		Core Components				
		top	middle		bottom	
Foam-Foam						
A-1	<		3″ med. foam (3040)			>
A-2	<	2″ med. foam (3040)			> < 1″ firm foam (3570)	>
A-3	<	2″ med. foam (3040)			> < 1″ very firm foam	>
A-4	<		3″ firm foam (3570)			>
A-5	<	2″ firm foam (3570)			> < 1″ very firm foam	>
	<		3″ very firm foam			>
A-7	<	2″ med. foam (3040)	> <		2″ firm foam (3570)	>
	<		3″ Latex			>
T-Foam-Foam						
B-1	<	1″ soft T	> <		2″ med. foam (3040)	>
B-2	<	1″ med T	> <		2″ med. foam (3040)	>
B-3	<	1″ soft T	> <		2″ firm foam (3570)	
B-4	<	1″ med T	> <		2″ firm foam (3570)	>
B-5	<	1″ med T	> <		2″ very firm foam	>
B-6	<		2″ soft T		> < 1″ med foam (3040)	>
B-7	<	1″ soft T	> <	1″ med T	> < 1″ med foam (3040)	>
B-8	<	1″ soft T	> <	1″ med T	> < 1″ firm foam (3570)	>
B-9	<	1″ soft T	> <	1″ med T	> < 1″ very firm foam	>
B-10	<		2″ med T		> < 1″ med foam (3040)	>
B-11	<		2″ soft T		> < 1″ firm foam (3570)	>
B-12	<		2″ med T		> < 1″ firm foam (3570)	>
B-13	<		2″ med T		> < 1″ very firm foam	>
Gel-Foam						
C-1	<	1/2 Reston gel	> <		2″ med foam (3040)	>
C-2	<	1/2 Reston gel	> <		2″ firm foam (3570)	>
C-3	<		full Reston gel		> < 1″ firm foam (3570)	>
C-4	<		full Reston gel		> < 1″ very firm foam	>
C-5	<		Stryker gel		> < 1″ firm foam (3570)	>
C-6	<		Stryker gel		> < 1″ very firm foam	>
Gel-T-Foam						
D-1	<	1/2 Reston gel	> <		2″ soft T	>
D-2	<	1/2 Reston gel	> <	1″ soft T	> < 1″ med T	>
D-3	<	1/2 Reston gel	> <		2″ med T	>
D-4	<		full Reston gel		> < 1″ med T	>
D-5	<		Stryker gel		> < 1″ med T	>

that for composite cushions incorporating Temperfoams, a 10-minute recovery time is required to obtain a repeatable applied force to achieve 80 percent compression. All tests were conducted within the temperature range 20–25°C and relative humidity 30–40 percent. All cushions were allowed to equilibrate to room temperature 4 hours before testing.

Incremental (Quasi-Static) Load-deformation: These tests were performed using the dead weight loading system designed previously by Cochran and Palmieri (4). Loads were applied cumulatively in 44.5 N increments, and the load deformation data produced was plotted graphically. Load deformation measurements also were made in shear by the method described by Cochran and Palmieri (4).

Bottoming Resistance: No unique point on the load-deformation characteristic is evident, for the materials studied, representing the transition from phase II to III (bottoming out). A "break-point" identified by Cochran and Palmieri (4) can be identified for most cushions if a small diaphragm pressure transducer (Sensotec type "s") is flush mounted in the support plate beneath the cushion axial with the indentor. A "knee" in the pressure-versus-cushion deformation characteristic is observed, and the applied load and deformation percent recorded at the breakpoint for the cushions tested.

Time Dependence: Tests were performed using the MTS-810 on selected cushion prototypes to illustrate the range of variation in hysteresis, creep, and energy dissipation after impulse loading. The first test determined the hysteresis during a full indentation cycle up to 50 percent compression at a rate of 10 percent per second. A second test to determine the creep response of the materials was performed using the machine in closed-loop control for load. Specimens were loaded to 100 N, at a rate of 10 N s^{-1}. The load was maintained at a constant level for 1 hour, and then unloaded. It was considerably difficult to maintain accurate load control due to the highly nonlinear and high compliance characteristics of the foams tested. Manual adjustment of the open-loop gain was necessary, thereby limiting the achievable rate of "instantaneous" loading required for an ideal creep test.

Energy Dissipation: Cushion prototypes were measured using the MTS-810 in open-loop mode. A deformation rate of 10 percent s^{-1} was applied up to 50 percent of the cushions thickness which was then held constant for 300 seconds. A very rapid impulse (representing that of the patient negotiating an obstacle such as a curb or step) was applied to produce an additional 25 percent compression in 50 ms. Data capture was achieved using a Z-80 Cromemco microcomputer with 12 bit A-D converter programmed to sample at a rate of 100 samples per second during the impulse loading phase of the test. The energy lost during impulse loading may be determined by measuring the hysteresis in that part of the load-indentation characteristic.

PROTOTYPE TESTING WITH ABLE-BODIED SUBJECTS

From the 32 prototype cushions tested mechanically, 13 were identified for further testing with able-bodied subjects. These cushions were selected to represent the full spectrum of measured load-deformation properties and include the broadest range of other physical factors (i.e., heat dissipation characteristics, time dependence, energy dissipation). To make these selections three parameters were identified as likely to affect interface pressure significantly, based on the mechanical tests: *1)* The indentation modulus at 40 percent compression. *2)* The indentation modulus at 75 percent compression. *3)* The bottoming-out resistance. The 13 selected cushions were sorted according to each of these variables and encoded to provide a summary characteristic of the cushion selected **(Table 4)**.

For test subjects, individuals of similar build but in three different weight categories were selected to determine whether weight should be a consideration in cushion fitting. The standards used to define average build were those developed by Davenport (2) and Goodheart and Schills (5).

Each subject was seated in a wheelchair correctly adjusted for his height on each of the 13 cushions. Pressure evaluators (Scimedics, Los Angeles, CA) were placed under each of the ischial tuberosities and trochanters and readings were recorded three times to obtain averages and to establish repeatability. On all cushions the sensors were removed and replaced between each reading; however, on the time dependent Temperfoams intermediate measurements were taken sequentially without removing the sensor to establish that an equilibrium pressure had been achieved. During measurements the subject was asked to sit in a reproducible position with his arms off the armrests and hands folded. To simulate the effects of normal upper-body weight borne by wasted gluteal tissues, an additional pressure measurement was made for each subject with weights supported on the iliac crests equal to 10 percent of their body weight.

Table 4
Prototype composite cushions evaluated with able-bodied subjects.

Type and Code	Mechanical Codes*			Cushion Configuration
Foam-Foam				
A-1	L	L	L	3″ med foam (3040)
A-2	L	H	H	2″ med foam (3040)/1″ firm foam (3570)
A-3	L	L	H	2″ med. foam (3040)/1″ very firm foam
A-6	H	H	H	3″ very hard foam
A-7	M	H	H	2″ med foam (3040)/2″ firm foam (3570)
A-8	L	H	L	3″ latex
T-Foam-Foam				
B-1	L	L	L	1″ soft T/2″ med. foam (3040)
B-9	H	L	L	1″ soft T/1″ med T/1″ very firm foam
B-13	M	L	H	2″ med T/1″ very firm foam
Gel-Foam				
C-1	M	H	L	½″ Thickness Reston Gel/2″ med. foam (3040)
C-5	H	H	M	2″ Stryker Gel/1″ firm foam (3570)
Gel-T-Foam				
D-4	H	L	H	Reston gel/1″ med T
D-5	H	H	L	Stryker gel/1″ med T

*Represents a summary of each cushion's primary mechanical properties relative to others tested. First two characters represent indentation stiffness at 40 and 75 percent compression, respectively. Last character indicates bottoming resistance of cushion. H = High, M = medium, and L = low value for each of these parameters.

RESULTS

Many combinations of materials were tested mechanically and with volunteer subjects. The results published in this article are intended to illustrate the advantages to be gained using the modular cushion concept. An exhaustive account of this study is available on request (3).

Mechanical Testing

General Behavior: In compression urethane foams typically exhibit a three-phase load-deformation characteristic due to the bending, buckling, and collapse of the cellular structure. During phase I the material is highly compressible (produces large deformations in response to small applied loads) and is relatively linear. Phase II behavior is defined as a highly nonlinear region in the load-deformation characteristic, which occurs as the foam becomes less compressible due to the resistance to deformation of collapsed cells. Phase III occurs when most foam cells have collapsed and the material becomes increasingly compacted. Single slabs of urethane foams begin phase III (densification) at 40–50 percent compression and become progressively stiffer at higher strains. This behavior is frequently described by clinicians as "bottoming out" and is associated with elevated interface pressures.

Sequential photography of a cushion half-section during indentation further demonstrates the function of the layered approach **(Figure 2)**. Measurements of percent compression in each layer were made, which illustrate the commencement of densification in each layer and for the cushion as a whole **(Figure 3)**. A bottom layer of firm foam does not reach phase III despite loading the composite to 80 percent compression, suggesting considerable residual useful phase II capacity in the cushion.

In the modular system careful selection of component layers can increase the strain at which phase III behavior begins, allowing in principle greater trochanteric loading without excessive load localization at the ischial tuberosities.

Uniaxial Compression Testing: All samples exhibited the three-phase behavior described in the preceding section **(Figure 4)**. The initial moduli of the foams tested ranged from 14.0 kPa (2.0 psi) to 122 kPa (18.0 psi). For Temperfoams, the initial moduli were generally higher than simple foams but also very strain rate dependent. The initial modulus for hard Temperfoams ranged from 240 kPa (34.8 psi) to 764 kPa (110.0 psi) for strain rates of 0.00131 and 0.0492 s^{-1}, respectively. Moduli for stage I versus stage II portions of the curves were considerably different, with stage II values as much as 32 times greater than stage I values. The modulus at 50 kPa (chosen because 50 kPa was a stress for which all 7 foams and 3 Temperfoams were well into their stage II regions) ranged

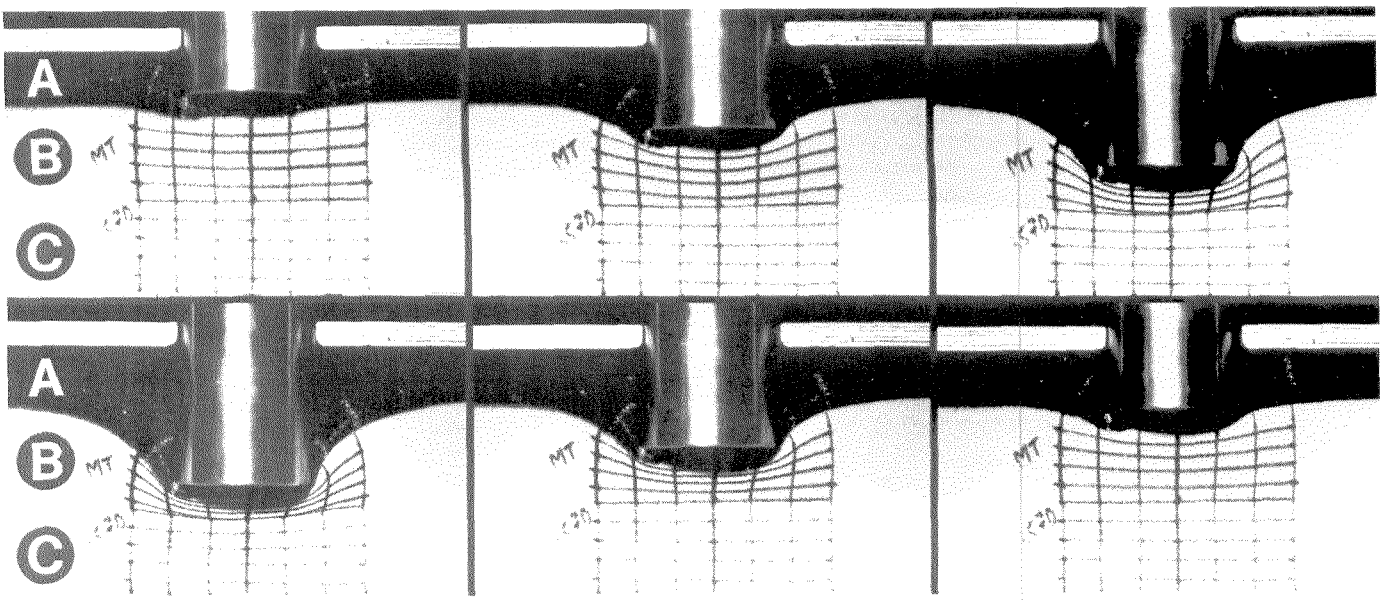

Figure 2
Indentation of modular cushion half-section at deformation rate of 11 percent s^{-1}. In this case the sample was photographed sequentially during loading and unloading to an indentation equal to 60 percent of its original thickness. Regions: **A** = reticulated foam; **B** = medium Temperfoam; **C** = firm foam (3570). Note that very little compression has occurred in bottom layer indicating substantial reserve capacity in cushion.

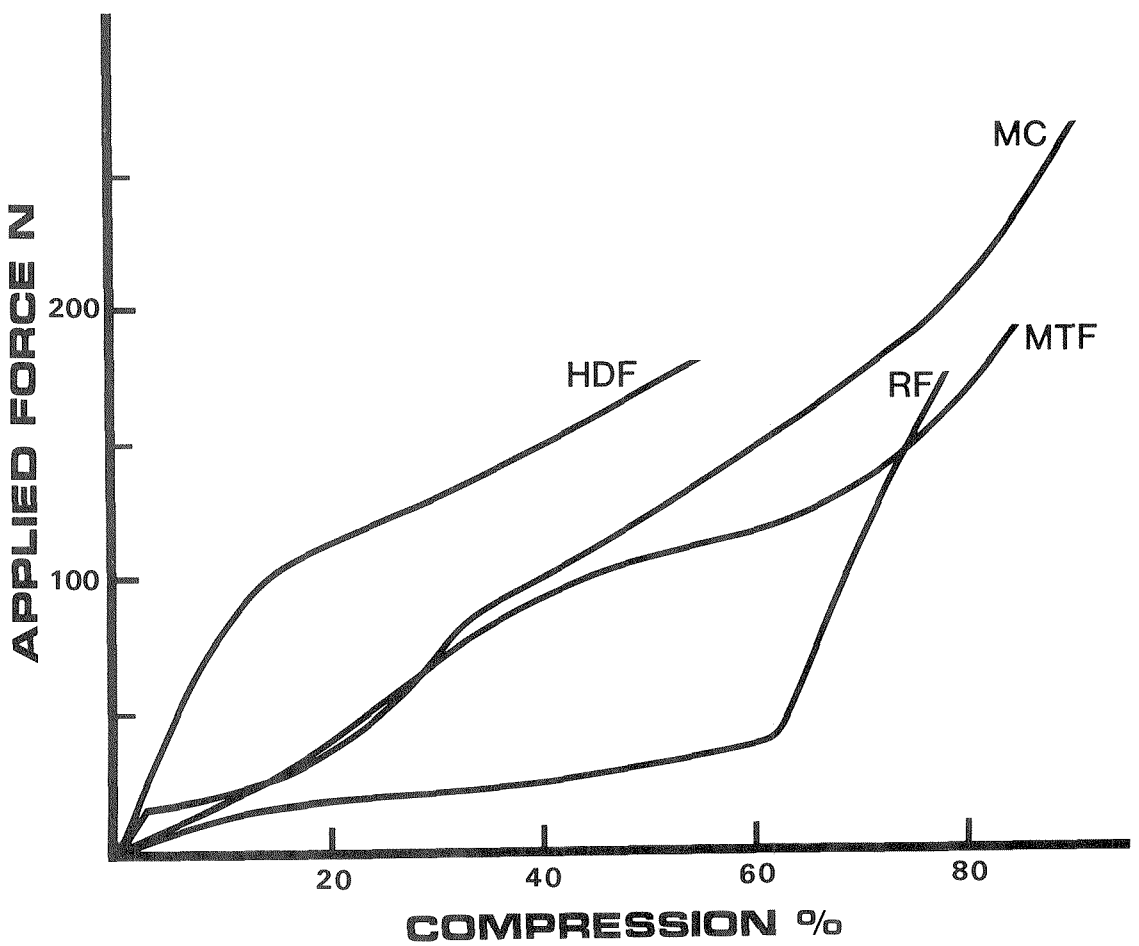

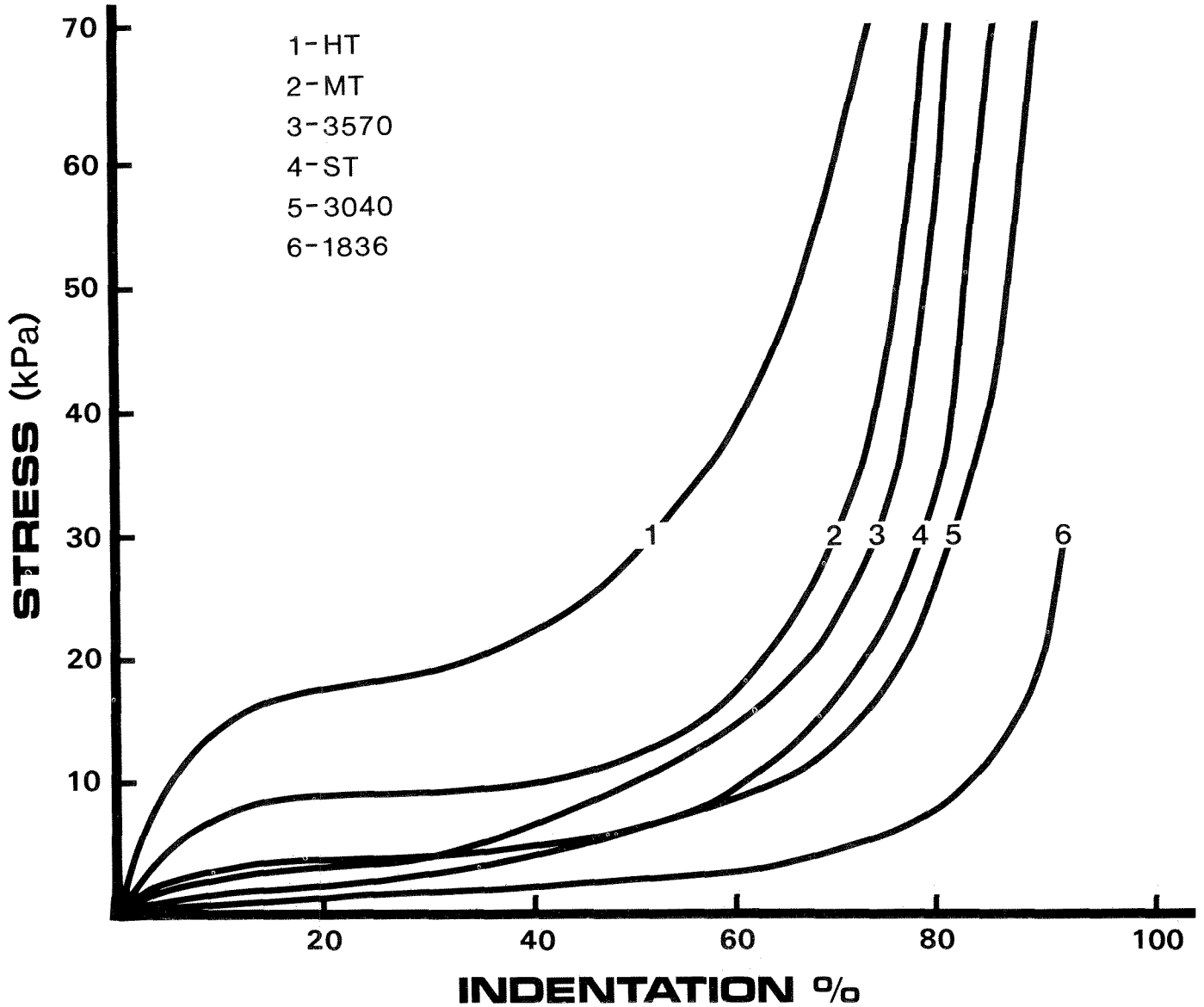

Figure 3 (left)
Results obtained by measuring percent compression in each layer from photographs such as that in Figure 2. In this case the cushion was subjected to maximum of 80 percent compresssion. MC = force-compression characteristic for cushion as a whole; RF = reticulated foam top layer; MTF = medium Temperfoam middle layer and HDF the firm foam lower layer. Note that despite applying 80 percent compression to cushion overall, the lower firm layer is still well within in phase II characteristic at 50 percent compression.

Figure 4 (above)
Three-phase behavior of foam samples in uniaxial compression. HT = high density Temperfoam; MT = medium density Temperfoam; 3570 = firm foam; ST = low density Temperfoam; 3040 = medium foam; 1836 = soft foam.

from 447 kPa (64.8 psi) to 740 kPa (107.2 psi). The Poisson's ratio values were approximately zero for the seven simple foams over the majority of the deformation range, although it did become difficult to accurately measure with our method for longitudinal strains of 60 percent or greater. The Poisson's ratio values for the three Temperfoams were nonzero during stage I, but in all cases were too difficult to determine unambiguously due to the viscoelastic behavior of the Temperfoam and the measurement technique used.

Incremental (Quasi-Static) Load-Indentation Tests: Results from the tests allow some generalizations to be made: foam-foam type modular cushions produced a wide range of different stiffnesses at both 40 percent and 75 percent indentation. Temperfoam-foam combinations tended to exhibit lower stiffness and less variety of properties than the FF prototypes. Although high- and medium-density Temperfoams are initially stiffer than simple foams, they behave differently when combined with

other materials: the layers compress so that the combination of mechanical characteristics produces a less stiff response. This is illustrated well in cushions incorporating a gel layer which dominates the cushion's properties especially at high deformations. These results are summarized in **Table 4** and are given in full detail in a prior report (3).

The "bottoming out" characteristics of the cushion prototypes were determined from measurements using a pressure transducer beneath the cushion. The results within each cushion category showed very little variation in the deformation value at break point, but a more pronounced variation in force at break point between categories. These differences did not prove to be statistically significant using Student's *t*-test.

Hysteresis during a full loading cycle ranged from 24 percent in simple foam and foam composite cushions to 56 percent in a soft foam/medium Temperfoam/medium foam composite. Values as high as 87 percent were obtained in a 3-inch block of medium Temperfoam. The Stryker gel cushion exhibited relatively low hysteresis (26 percent).

Time Dependence Tests: Measurements of creep and hysteresis during impulse loading were performed to demonstrate time-dependent properties. Simple foam, and composites incorporating only urethane foams showed the least creep (15–20 percent).

Composite cushions incorporating a layer of Temperfoam produced extensive creep (60–80 percent) and the Stryker gel cushion fell between the two extremes with a value of 40 percent.

During impulse loading simple-foam and composite urethane cushions were more hysteretic than during quasi-statis loading (40–45 percent) but considerably less than cushions incorporating Temperfoam (69–76 percent). The Stryker gel cushion again fell between these values with a value of 64 percent. A marked increase in stiffness of the Temperfoam during impulse loading was observed.

Able-Bodied Subject Testing

The relationship between each of the encoded mechanical parameters and interface pressure was examined for each subject. The results **(Table 5)** suggest that no simple relationship exists between interface pressure, the stiffness moduli, or center bottom pressure (bottoming resistance) parameters.

Ischial tuberosity pressures for weight groups 1 and 2 do not differ significantly, but weight group 3 produced an overall mean pressure that did differ significantly from groups 1 and 2 ($P < 0.001$) yielding a generally high mean pressure. This result suggests that the heavy body-weight group tended to "bottom out" on the cushions provided and that perhaps thicker cushions (with a weight supporting top layer) should be used for these patients.

For weight groups 1 and 2, the cushions giving the lowest interface pressure were:

B-1 = 1 inch soft T/2 inch medium foam
B-9 = 1 inch soft T/1 inch Med T/1 inch very firm foam
B-13 = 2 inch Med T/1 inch very firm foam

For each cushion type category the cushions giving lowest pressures were:

A-1 = 3 inch medium foam
B-1 = 1 inch soft T/2 inch medium foam
C-1 = 1/2 inch Reston gel/2 inch medium foam
C-4 = Reston gel/1 inch Med T

For weight group 3, the lowest interface pressures were:

A-7 = 2 inch medium foam/2 inch firm foam
D-4 = 2 inch Reston gel/1 inch medium T
B-1 = 1 inch soft T/2 inch medium foam

For each cushion type category the lowest interface pressures were:

A-7 = 2 inch medium foam/2 inch firm foam
B-1 = 1 inch soft T/2 inch medium foam
C-5 = 2 inch Stryker gel/1 inch firm foam
D-4 = 2 inch Reston gel/1 inch medium T

With the exception of A-7, all cushions were tested with a top layer of non-weight-bearing, reticulated foam.

DISCUSSION

A wheelchair cushion comprising component layers which may be selected by the patient and clinican is described. Mechanical tests confirm that modular cushions achieve properties in combination that are not readily attained using the component layers alone. Comparison was made between the mechanical characteristics of the cushions and the interface pressures generated beneath the ischial tuberosities of able-bodied volunteers who, although of similar build, were from different body weight groups. **(Table 6)** It was hoped that cushions with similar pressure-relief characteristics but with a range of physical

Table 5
Mean Young's modulus and applied force at 40 and 75 percent indentation for each class of composite cushion.

Cushion		40 Percent indentation		75 Percent indentation	
		Young's modulus, kPa	force, N	Young's modulus, kPa	force, N
Foam-Foam (A)	mean	78.0	76.5	296.4	251.5
	SD	14.7	13.4	47.9	40.4
T Foam-Foam (B)*	mean	73.2	73.6	225.6	220.1
	SD	11.5	16.5		41.9
Gel-Foam (C)	mean	98.5	74.3	322.0	305.1
	SD	17.2	8.2	52.7	25.0
Gel-T-Foam (D)*	mean	96.4	68.9	274.1	271.6
	SD	2.2	22.1	27.9	44.7

*Note the relative low stiffness achieved with cushions incorporating Temperfoam, especially at 75 percent indentation. Temperfoam alone responds more stiffly than simple foam at these indentation levels.

properties could be selected directly from mechanical test data. Little relationship was observed, however, between the stiffness moduli or bottoming resistance of different cushions and the interface presssure measured. Clinical experience is at variance with these findings as we frequently observed that differences in interface pressure can be produced by changing the stiffness of foam used. This contradiction with clinical experience could be attributable to the fact that the mechanical interaction between the buttocks and cushion is more complex than simple inferences made from stiffness moduli using a simple indentor. It is also probable that relative differences in cushion performance may be far more pronounced for the flaccid wasted tissues of paralyzed patients than the able-bodied subjects participating in this study. This hypothesis is further supported by observations made while developing the protocol we used for measuring interface pressures. Differences (up to 20 percent) in interface pressure were observed if the subject generated changes in gluteal muscle tone. Ongoing studies of the profile of the buttock cushion interface (10,12) may help to elucidate these issues.

Comparison of cushions based on interface pressures alone does permit identification of module configurations with superior performance and offering a range of characteristics to be selected at the discretion of the therapist and patient. A prototype modular cushion system for moderate to low-risk individuals is therefore proposed.

PROTOTYPE MODULAR CUSHION SYSTEM

Based on these tests we propose a Modular Cushion System consisting of 13 basic components which may be stocked by an institution for utilization in various combinations to produce 7 different cushions suitable for the varying needs of spinal cord injured individuals. Four "common components" are utilized in all cushions. The remaining 9 "core components" are varied to suit specific needs. The components are listed in **Table 1** together with their source.

Standard Common Components

These components are the same for all versions of the modular cushion: *1)* cover; *2)* 1 inch "standard top layer" (reticulated foam), or 1 inch "alternate top layer" (3040); and *3)* shaped Ethafoam seat insert.

The covers for all cushions used in this study are described in detail by Cochran and Palmieri (4). The top surface is water permeable and stretchable. This section can be removed for washing and may be replaced if necessary at low cost. Velcro strips are placed underneath the cushion to prevent it slipping during transfers. These attach to matching strips on the wheelchair sling seat. The top layer of reticulated foam provides a component that is washable, disposible if soiled, and fire retardant. Originally one purpose of this layer was to help reduce interface humidity, especially when used in conjunction with a plastic enclosure for the lower layer foams. Interface humidity measurements suggest however that the reticulated foam does not reduce relative humidity levels significantly when compared with those obtained with moderately resilient foam such as 3040. On the other hand, performance with either is superior to that obtained with an impermeable top layer. Since 1 inch thick medium density foam is also easy to wash and is inexpensive

Table 6
Average pressure over ischial tuberosities for each cushion prototype according to body weight group.

Codes				Group 1		Group 2		Group 3	
Cushion	Mechanical*			mean	SD	mean	SD	mean	SD
A-1	L	L	L	65.3	4.9	64.1	11.2	72.5	4.2
A-2	L	H	H	65.8	1.3	70.1	7.7	78.2	9.9
A-3	L	L	H	69.4	6.7	69.5	6.7	77.4	6.9
A-6	H	H	H	64.8	6.7	77.4	3.5	80.0	6.2
A-7	M	H	H	74.8	5.6	61.9	4.4	70.4	7.0
A-8	L	H	L	78.8	6.2	75.1	3.1	88.6	13.8
B-1	L	L	L	60.2	5.0	57.8	9.0	71.4	7.0
B-9	H	L	L	63.1	9.7	57.2	5.7	72.9	9.6
B-13	M	L	H	62.7	6.8	62.2	11.5	74.2	7.4
C-1	M	H	L	68.0	0.3	67.1	6.8	88.1	8.5
C-5	H	H	M	71.1	7.8	73.8	9.7	83.6	7.8
D-4	H	L	H	70.8	7.0	62.1	8.6	70.4	8.2
D-5	H	H	L	80.2	9.4	67.1	6.9	86.7	9.0

*Little relationship is observed between the mechanical test code generated from indentation data and interface pressure.

to replace, the reticulated foam can be replaced with a top layer of 3040 when enhancement of pressure relief is advisable.

All modular cushions should incorporate a sling seat insert. Appropriately contoured inserts are available commercially (Alimed, Inc.) manufactured from specifications established in this study. It consists of a convex, 1 inch thick section of expanded semirigid foam that fills in the sag of the sling seat, but does not produce a hard surface such as is found with wooden seat boards. A board can be hazardous if the wheelchair cushion core materials deteriorate significantly. The insert can be enclosed within the cover of the cushion and should be attached to the bottom layer of the cushion using a contact adhesive. Further bonding of layers is not necessary or recommended.

The following seven core combinations of the above components have been selected from the list shown in **Table 1** as most appropriate for seating. Each cushion listed should include the common components in addition to the core components selected. Each set of core components below may be enclosed in a loose plastic envelope for protection if desired:

A-2 – 2 inch Med Foam/1 inch Firm Foam
A-7 – 2 inch Med Foam/2 inch Firm Foam
B-1 – 1 inch Soft T/2 inch Med Foam
B-9 – 1 inch Soft T/1 inch Med T/1 inch V. Firm Foam
B-13 – 2 inch Med T/1 inch V Firm Foam
C-1 – 1 inch Gel/2 inch Med Foam
D-4 – 2 inch Gel/1 inch Med T

The total number of different cushion configurations recommended is seven, based on combinations of nine different components. All components are commercially available, apart from the gel layer, which is one of the components needed for cushion C-1 and was manufactured by Reston in a small batch run for this study. With the exception of A-7, all cushions were evaluated with a 1 inch top layer of low-density, reticulated foam. It is recommended however that a standard 1-inch top layer of medium-density type 3040 foam be used.

Prescription of the Modular Cushion System

The following general guidelines can be used in selecting cushions for specific individual needs and priorities using the cushion configurations recommended for each weight group. When prescribing cushions for our patients we establish maximum acceptable presssure goals at the start of the evaluation (**Table 2**). These criteria are used in addition to other preference factors (heat dissipation, thickness, affect on trunk stability, etc.) to select a cushion that is clinically satisfactory, comfortable and practical for the patient. All cushions identified in this study are appropriate only for moderate to low risk individuals but should give superior pressure relief when compared with simple monolayer cushions. They may be used as starting points for custom fitting (with pressure measurements) for high-risk individuals. Numbers in parentheses refer to recommended modular cushion configurations as given in **Table 3**.

Foam-foam cushions are recommended where possible

as they are light, inexpensive, have a moderate fatigue life, and their behavior is predictable (A-2; A-7).

Cushions incorporating Temperfoam can provide improved stability as they tend to dampen dynamic loads rather than cause the patient to bounce. At high rates of loading however, these materials become increasingly stiff, but due to their ability to contour closely to body shapes, dynamic localization of pressure is unlikely if the cushion has not bottomed out. Caution should be exercised in using Temperfoams as they have viscoelastic characteristics with the result that pressure relief may be short lived if there is any tendency to bottom out due to creep over prolonged periods. The mechanical properties of these materials are also extremely temperature dependent. Wide variation in the initial stiffness can occur due to changes in environmental temperature. Particular caution should be exercised when these materials are used in warm and hot environments as they may bottom out due to excessive softening. They are also very stiff at low temperature and may initially produce high local pressures. They will in time, however, soften due to body heat. If the user is close to bottoming out on the material at the time of evaluation, then high pressures may result after prolonged sitting. A test to determine the residual capacity of the cushion (by holding weights to overload the cushion while pressures are monitored) should be considered (B-1; B-9; B-13; D-4).

Gels tend to inhibit any rise in skin temperature during sitting due to their high heat capacity as compared to foams. It was found in a prior study that gel cushions alone tend to maintain lower skin temperatures, but do not reduce the interface moisture as there is no opportunity for exchange of air (C-1; D-4).

Gel-Temperfoam combinations provide a more stable support surface than the gel-foam configuration and may be useful for patients with poor trunk stability who may benefit from a heat dissipating surface (D-4). Heat dissipation due to the heat sink quality of gel is limited in time (2–4 hours).

The results from this study indicate that the following cushions produced significantly lower interface pressures within each weight group for individuals of normal build as shown, and also relatively low pressures when subjects carried additional weights to overload the cushion.

Weight Group 1 (130–150 lbs) (59–68Kg):
A-2 – 2 inch Med Foam/1 inch Hard Foam
A-7 – 2 inch Med Foam/2 inch Hard Foam
B-1 – 1 inch soft T/2 inch Med Foam
B-9 – 1 inch soft T/1 inch Med T/1 inch V. Hard Foam
B-13 – 2 inch Med T/1 inch V. Hard Foam
C-1 – 1 inch Gel/2 inch Med Foam
D-4 – 2 inch Gel/1 inch Med T

Weight Group 2 (150–170 lbs) (68–77 kg):
A-7 – 2 inch Med Foam/2 inch Hard Foam
B-9 – 1 inch soft T/1 inch Med T/1 inch V. Hard Foam
B13 – 2 inch Med T/1 inch V. Hard Foam
C-1 – 1 inch Gel/2 inch Med Foam
D-4 – 2 inch Gel/1 inch Med T

Weight Group 3 (170–190 lbs) (77–86 Kg)
A-7 – 2 inch Med Foam/2 inch Hard Foam
D-4 – 2 inch Gel/1 inch Med. T/1 inch 3040

With the exception of A-7, each cushion is intended to be used with the one-inch reticulated layer on top and the solid (non-cutout) Ethafoam filler below.

Cushions A-7 and D-4 are common to all three weight groups and might be described as "good general cushion designs". They also offer a choice between an inexpensive foam configuration (A-7) and a heat-dissipating, shear-relieving gel/Temperfoam system (D-4). Cushions B-9 and B-13 provide Temperfoam/foam combinations that are effective for the lower weight groups as is C-1, a special gel/foam composite.

Enhancement of Cushion Design

Two of the Common Components may be altered to provide additional pressure relief in higher risk individuals. For many individuals, interface pressure readings on the basic 3-inch thick cushion may be well outside existing guidelines for pressure-sore protection. Several simple measures may be undertaken which could enhance the performance of the modular cushion configurations described previously. In particular, the Ethafoam insert may be cut out at the rear, after measurement of the position of the ischial tuberosities relative to the wheelchair, and their separation. The overall dimensions of the cutout region in the convex base insert should allow a margin of at least 40 mm on either side of the ischial tuberosities and 30 mm anterior to their furthest point forward when sitting.

Additional pressure relief can also be obtained by replacing the top, reticulated foam layer by a more resilient layer of medium foam (3040), particularly if frequent soiling of the cushion is not anticipated. It is recommended that the 3040 type layer *not* be used with one of

the gel configurations, if the skin temperature controlling property of gel is to be retained.

Precautions

The use of special cushions should never be interpreted as a total resolution of factors responsible for pressure sores. Regular pressure relief by "pushups" in the chair are assumed in setting acceptable interface pressure levels. Users should be encouraged to undertake daily skin inspections to detect persistent redness which may be an indicator of incipient breakdown. Frequent replacement of components (approximately every 6 months, depending on the amount of use) is necessary as foam components fatigue with use and deteriorate with age.

Initial fitting of the wheelchair cushion should be undertaken by a skilled therapist using a pressure evaluator to ensure that interface pressure guidelines are achieved. Many patients may present more complex problems requiring custom seating. The procedures for selecting and fitting custom cushions require experience and training if they are to be undertaken effectively. A computer program (CUSHFIT) inspired by this study (13) has been developed at Helen Hayes Hospital to develop a computer-aided fitting procedure that will facilitate the transfer of the special expertise developed at Helen Hayes Hospital in wheelchair fitting to other Centers. This system is particularly suited for use with a modular type of cushion system.

Finally, the reader is reminded that none of the modular type cushion concepts described in this study have been actually tested on persons at risk of pressure sores.

REFERENCES

1. FERGUSON-PELL MW, WILLIE JC, RESWICK JB, BARBENEL JC: Pressure sore prevention for the wheelchair-bound spinal injury patient. *Paraplegia* 18: 42–51, 1980.
2. KROUSKOP TA, NOBLE PC, GARBER SL, SPENCER WA: The effectiveness of prevention management in reducing the occurrence of pressure sores. *J Rehabil Res and Dev* 20: 74–83, 1983.
3. GARBER SL, KROUSKOP TA: Wheelchair cushion modification and its effect on pressure. *Arch Phys Med and Rehabil* 65: 579–583, 1984.
4. GARBER SL, KROUSKOP TA: Body build and its relationship to pressure distribution in the seated wheelchair patient. *Arch Phys Med Rehabil* 63: Jan, 17–20, 1982.
5. COCHRAN GVB, PALMIERI V: Development of test methods for evaluation of wheelchair cushions. *Bul Pros Res* 10–33: 17(1), 9–30, Spring 1980.
6. American Society for Testing Materials, Standard Methods of Testing Slab Flexible Urethane Foam, ASTM Designation: D 1564–71.
7. KADABA MP, FERGUSON-PELL MW, PALMIERI VR, COCHRAN GVB: Ultrasonic mapping of the buttock-cushion interface contour. *Arch Phys Med and Rehabil* 65: 467–469, Aug 1984.
8. REGER SI, CHUNG KC, GLENN M, McLAURIN CA: Shape and pressure distribution on wheelchair cushions. Proceedings: Rehabilitation Engineering Society of North America, 8th Annual Conference, Memphis, Jun 24–28, 1985.
9. American Society for Testing and Materials, Standard Specifications and Tests for Latex Foam Rubbers, ASTM Designation: D 1055–69.
10. DAVENPORT CB: Body build and its inheritance. Publication 329: Carnegie Institute of Washington, 1923.
11. GOODHART RS, SCHILLS ME: *Modern nutrition in health and disease*. 5th Edition, Philadelphia: Lee and Febiger, 1975.
12. COCHRAN GVB, FERGUSON-PELL MW, PALMIERI V, BRUNSKI JB, BURN TG, TRACHTMAN LH: Development of a modular wheelchair cushion for spinal cord injured persons. Final report submitted to Research and Technology Foundation of the Paralyzed Veterans of America, Mar 1984.
13. TRACHTMAN LH, FERGUSON-PELL MW, PALMIERI V, CARDI MD, COCHRAN GVB: Development of a computer-aided wheelchair cushion fitting clinic for the prevention of pressure sores. Proceedings: ICRE II, Rehabilitation Engineering Society of North America, Ottawa, Jun 17–22, 1984.