Veterans Administration

Journal of Rehabilitation Research and Development Vol. 24 No. 2
Pages 39–50

Design considerations in development of a prototype, piezoelectric internal fixation plate: A preliminary report*

GEORGE VAN B. COCHRAN, M.D.; M. W. JOHNSON, Ph.D.**; M. P. KADABA, Ph.D.; V. R. PALMIERI, B.S.; G. MAHAFFEY
Orthopaedic Engineering and Research Center, Helen Hayes Hospital, West Haverstraw, New York 10993

Abstract—The piezoelectric internal fixation plate represents a new concept in orthopaedic implants. The purpose of this device is to provide stable bone fixation while delivering internally generated, microampere direct currents to prevent or treat nonunion of a fracture or osteotomy. Clinically, currents of this type have been effective in treatment of nonunion, but application has required separate, implanted, or external battery or radiofrequency powered circuits. The "piezoplate" being developed contains an integral piezoelectric element that generates current in response to either physiological loading such as weightbearing or to externally applied ultrasound. Currents are processed by a rectifying circuit for delivery to bone by electrodes. Specially designed series/parallel piezoelectric elements and dual processing circuits are required to generate optimum rectified currents from the low-frequency, high-voltage signals generated by weightbearing, as well as the high-frequency, low-voltage signals produced by ultrasound. This paper reports on the current status of development and describes design parameters of this device which combines the modalities of mechanical fixation and electrical stimulation in a single implant.

*This research was performed at Helen Hayes Hospital and at the Surgical Research Service, Castle Point VA Medical Center, and was presented in part at 5th Annual Meeting of Bioelectrical Repair and Growth Society, Boston, MA, October, 1985. It was supported by VA Rehabilitation Research and Development Grant, Project 19-2, by Walter Scott and Lyons Foundations, and by New York State Department of Health.

**Present address: Physics Department, California State University, Stanislaus, Turlock, CA 95380.

INTRODUCTION

Electrical stimulation of bone healing now represents a major frontier in orthopaedic and rehabilitation engineering. Research is under way in many centers on augmenting bone healing by various types of directly or indirectly applied electrical energy. The approach was initiated originally by observations that electrical potentials are generated by mechanical strain in bone. At present, it is thought that strain-related potentials observed in wet bone (7) are generated by streaming phenomena (14,17,22).

The first successful attempts to stimulate bone formation with electrical energy were made with microampere direct currents; this invasive approach requiring implantation or percutaneous insertion of electrodes is used widely now in treatment of nonunion (3). Experimental results with medullary osteogenesis in a rabbit tibia model have led to the belief that optimal osteogenic effects are obtained with 20-μA constant currents applied through stainless steel electrodes (12), although currents as low as 0.075 μA have been shown to produce osteogenesis (1). The electrode material itself has been shown to be a key factor in determining bone response for a given current density (25). For example, in experimental medullary osteogenesis, platinum electrodes have been shown to be more effective than stainless steel in the low (2–5 μA) current range (10) and carbon fiber electrodes appear to be most active in the 1-μA range (29). Recent evidence also suggests that cathodic potential is another critical factor in osteogenesis (9).

Journal of Rehabilitation Research and Development Vol. 24 No. 2 Spring 1987

Noninvasive techniques based on externally applied electrical energy are also widely used in clinical treatment of nonunion. These techniques, including capacitative coupling and pulsed electromagnetic fields (PEMF), are attractive because they do not require surgical placement of electrodes at the fracture site. Discussion of these modalities is beyond the scope of the paper, but the broad subject of electrically induced osteogenesis has been reviewed in a recent symposium (2).

It is important to note that clinical indications for electrical stimulation of osteogenesis remain related primarily to cases of delayed bone healing; possible applications, if any, affecting normal fracture healing have not been well defined.

Other electrical techniques for stimulation of osteogenesis remain in a largely experimental stage. One approach related to the subject of this paper involves implantation of electrically charged materials in apposition to bone. Since an initial report by Fukada et al. (13), this idea has been pursued by several other investigators (11,16,26,27,28). In a typical experiment of this type, an electret (Teflon film) or piezoelectric polymer film (polymethyl L-glutamate, or polyvinylidene fluoride) has been wrapped around rabbit femora shafts and increased bone formation has then been observed under or around the active film. It is not clear whether the effects reported have been due to static surface charges on the material or charges developed by deformation. Multilayer films, constructed to produce greater charge during bending, have been reported to be more effective than monolayer films (11).

Another variant of the implanted-material approach was initiated by Park et al. (20,21), who showed that barium and lead titanate ceramics were tissue-compatible and would generate currents in the 1-nA range during loading, after implantation in bone. Other investigators (8,23) have shown that externally generated microampere direct currents could increase the strength of fixation of intramedullary plugs of porous metals, but the work of Park et al. (19) and Schumacher et al. (24) using porous plugs of piezoelectric ceramics implanted in experimental animals was unsuccessful. That lack of success could have been the result of the low density of the charge generated by the piezoelectric materials. Kraus (18) suggested a somewhat similar use of a piezoelectric element as an alternative to an electromagnetic power source for electrodes intended to improve bone fixation of an endoprosthesis.

Development of the "Piezoplate"

Inspired by the work of Fukada et al. (13), we introduced the concept of using piezoelectric materials as an integral part of an internal fixation device. First, we constructed sample internal fixation plates with the piezoelectric material on the surface of the plates, and implanted them in dogs, but we could detect little, if any, effect on osteogenesis in the bone in direct contact with piezoelectric ceramics or polymers on the plates. Here again, we believe that charge density was probably too low over the surface of the piezoelectric materials, from which we had removed the metal film electrode.

Accordingly, we devised a different technique in which the piezoelectric material is incorporated as an electrical generator within an internal fixation device (4,5) such as a bone nail or plate. In this design, the "piezoplate," the ceramic or polymer is not in contact with bone but is sealed inside the internal fixation device. Charge is generated when the device is subjected to mechanical loading, as by weightbearing, or by external application of ultrasonic energy. Our current concept calls for the charge generated to be processed by an integral rectifying and smoothing circuit and delivered locally to bone by discrete electrodes as a microampere direct current. This device would thus fall into the category of an invasive bone stimulator of the direct-current type. Requiring surgical intervention, it would be intended for use only in instances where surgery for internal fixation is considered necessary for recognized clinical indications.

In our previous reports (4,5), we described tests of this concept using miniature internal fixation plates of both epoxy/aramid-fiber composite and titanium, in each case with an incorporated ceramic piezoelectric element. Those tests, conducted on beagle femora *in vitro* and *in vivo*, demonstrated that physiological loading or its equivalent (at 1 Hz) could generate average direct (rectified) currents of 0.2–0.4 μA, which is within the range predicted mathematically. That level exceeded the minimum range for bone stimulation with stainless steel electrodes reported by Baranowski et al. (1) and approached the optimum range for stimulation with platinum or carbon-fiber electrodes (10,29). Furthermore, exciting the ceramic element with an external ultrasonic source at resonance easily yielded

direct (rectified) currents in the 20-μA range *in vivo* (currents exceeding 100 μA were obtained in those early tests).

In our laboratory, we continue to work to develop a piezoelectric internal fixation plate directed toward clinical prevention and treatment of nonunion. The purpose of the present paper is to report on current progress. Specifically, we describe initial tests of electrical output of full-size piezoelectric plates (scaled to human proportions) in large dogs. Also, we examine design parameters and developments derived from the experience of these tests, and discuss the course of future development needed to make the "piezoplate" a clinically useful device.

OUTPUT TESTING OF PIEZOELECTRIC PLATES

Materials and Methods

Test plates for implantation in large dogs were constructed in our laboratories of an epoxy/glass-fiber composite in order to facilitate machining and fabrication (clinical use of this composite is not contemplated). The size (80 × 12 × 4.5 mm) in a four-hole configuration was selected to be compatible with human scale, and to allow inlaying of a piezoelectric element of maximum surface area (dimensions, 20 × 8 × 0.9 mm). The piezoelectric ceramic element (Vernitron, Inc., lead titanate zirconate, type PZT–5H; $d_{31} = -274$ pC/N) was selected for maximum output since it has the highest d_{31} coefficient. The PZT element/plate composite yielded a resonance frequency of 2.4 MHz. For monitoring purposes, a strain gauge (CEA–13–032UW–350) was bonded to the top surface of the ceramic element using AE–15 epoxy (Micro-Measurements). Monitoring leads of #30-gauge, etched, Teflon-insulated wire were soldered to each face of the silver-electroded PZT element, and similar leads were attached to the strain gauge **(Figure 1)**.

The piezoelectric elements were inlaid in a cavity milled into the top surface of the plate, bonded to the plate with AE–15 epoxy, and waterproofed with additional layers of Hy-Sol Epoxy Patch (*In Vivo* Metric Systems). The goal of waterproofing was to maintain an insulation resistance of >100 MΩ for an indefinite period following implantation.

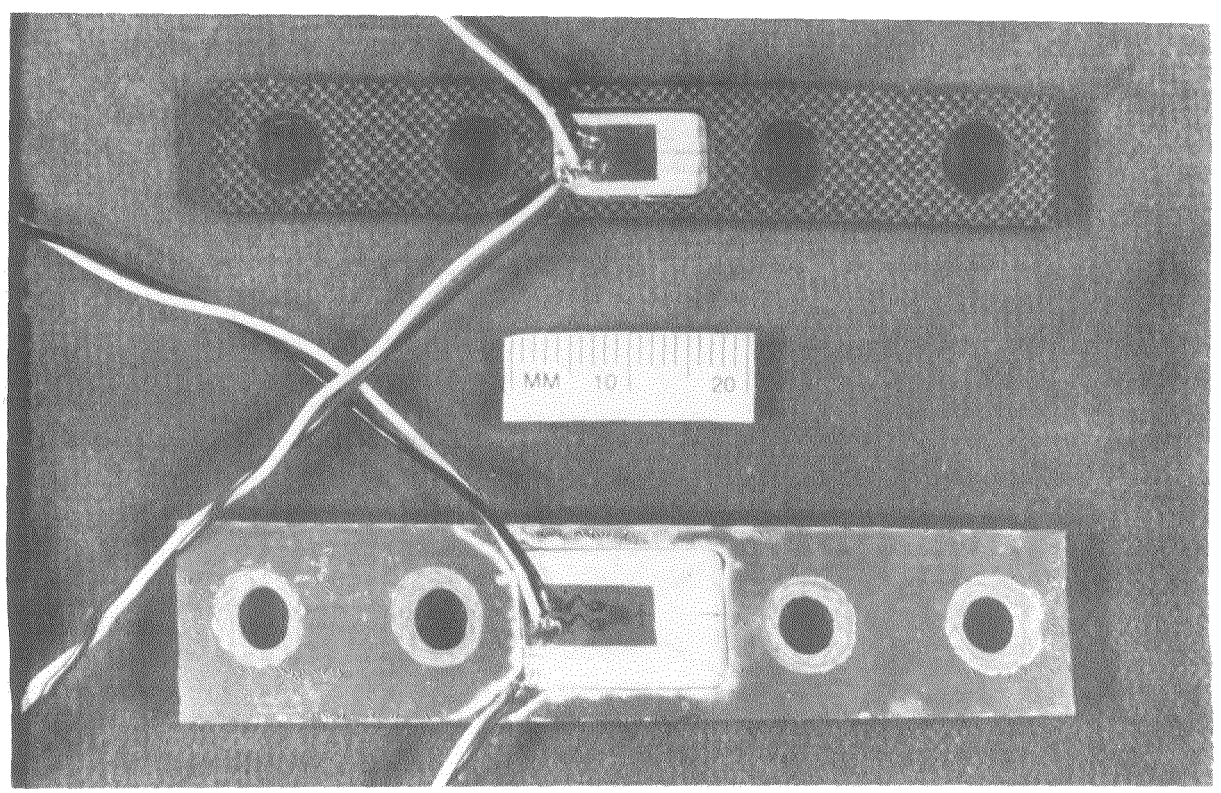

Figure 1
Test models of piezoelectric internal fixation plates during construction: (*above*) graphite fiber and epoxy composite; (*below*) glass fiber and epoxy composite. The PZT–5 element with monitoring strain gauge is visible in midsurface of plate with monitoring leads, before application of final waterproofing layer.

For preliminary *in vitro* tests, plates were screwed to a plastic tube simulating canine bone, and loads were applied using a four-point bending configuration in an MTS Materials Test system. For *in vivo* testing, the plates were attached to intact femur or radius in 30-kg dogs by means of ASIF-type screws. Wires were passed via a trochar to the interscapular region and stored in a Nylon mesh jacket (Alice King Chatham, Medical Arts). Signals were transmitted to the measuring apparatus through a 10-m cable (**Figure 2**).

For tests of external ultrasonic stimulation, energy was supplied by a Wavetek Model 192 waveform generator and an RF power amplifier (Electronic Navigation, Inc., ENI 240L) powering a nonfocussed 2.25-MHz ultrasonic transducer. Power output of the transducer at an excitation voltage of 20-V peak-to-peak was less than 10 mw/cm^2. The transducer was coupled to the skin with acoustic gel. During tests, the input frequency and the position of the transducer were adjusted until maximum voltage output from the piezoelectric element on the implanted plate was observed.

For measurement of peak-to-peak voltages generated by walking, the leads from the piezoelectric element were connected to a Keithley electrometer. For measurements of average current output, the piezoelectric element was connected to a full bridge rectifying circuit constructed with Shottky diodes. Smoothing was accomplished by a 0.56-μF capacitor, and current was determined by measuring voltage drop across a 1-MΩ resistor (**Figure 3a**). For ultrasonic measurements, average current was determined (**Figure 3b**) with a Keithley 480 picoammeter. Strain gauges were excited and monitored by means of a Vishay VE–20 strain indicator. Recordings of all parameters were made with a dual-channel Nicolet 4094 digital oscilloscope. In these studies, the object was to monitor the output of the piezoelectric element, and thus external circuitry was employed; no attempt was made to build the processing circuit into the plate itself.

Results

In bench-testing, during four-point bending while secured to a 1.5-cm-diameter tube, all plates exhibited similar output performance. Typical voltage and

Figure 2
Test animal showing site of femoral implantation, instrumentation jacket, and monitoring cable.

current output in four-point bending are shown in **Figures 4a and 4b** at different loading rates. Numerical results for bench testing at a repetition rate of 1 Hz are shown in **Table 1**. Results, in terms of load voltage and current increase, varied with strain in a linear manner as expected. It was also evident that the magnitude of current depends on the rise time and repetition rate of applied stress, but the voltage is invariant with these factors.

In tests to determine the practical level of insulation resistance needed to maintain the maximum voltage output, four-point bending tests were repeated using various values of shorting resistors inserted between the leads of the piezoelectric element. The results for "insulation resistance" (IR) of 300, 88, and 22 megohms are shown in **Table 2**. For frequencies of 1 Hz, output voltage is significantly attenuated by a resistance of less than 100 MΩ.

Table 1
Numerical results for bench-testing at a loading frequency of 1 Hz.

Strain on PZT element (με)	Load (Newtons)	Voltage (open circuit) (Volts)	Average Current (μA)
50	27	20	0.162
100	55	38	0.38
200	115	60	0.67

Table 2
Results for level of "insulation resistance" needed to maintain maximum voltage output.

Plate	Strain (με)	Frequency (Hz)	Open Circuit Voltage (V)		
			IR>300 MΩ	IR≈88 MΩ	IR≈22 MΩ
E_2	104	2	42	40	30
		1	42	34	16
E_3	97	2	44	40	28
		1	40	30	13
F_1	106	2	42	42	28
		1	42	—	—

IR = insulation resistance

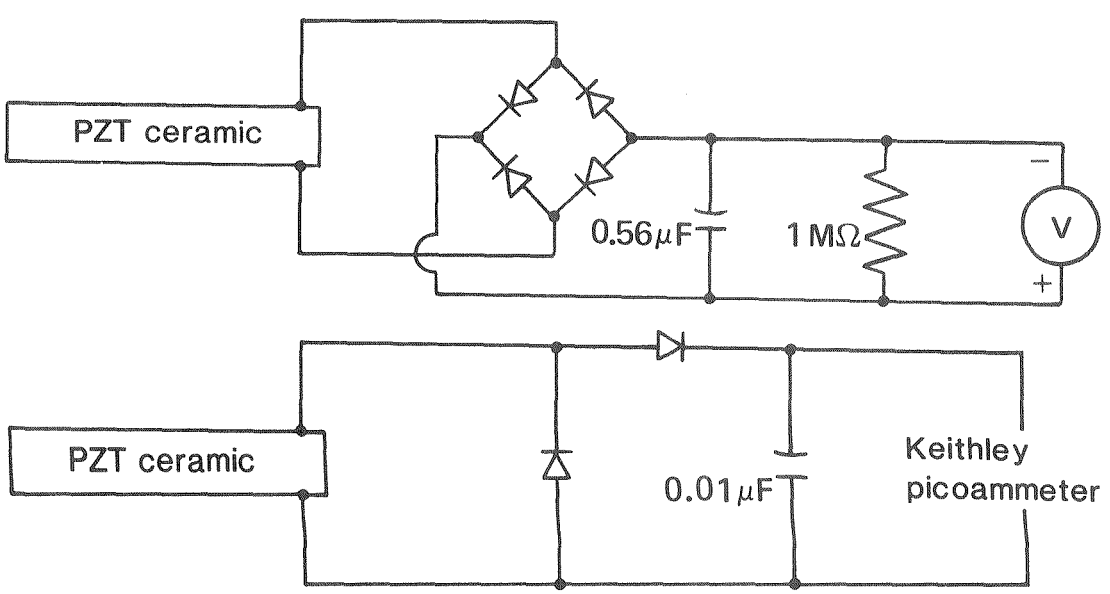

Figure 3
Processing and measuring circuit employed during loading *in vitro* and *in vivo* to monitor direct current output of the piezoelectric plates. Shottky diodes were utilized to minimize voltage drop. *a*) Circuit for current measurement during walking. *b*) Circuit for current measurement during ultrasonic stimulation.

Journal of Rehabilitation Research and Development Vol. 24 No. 2 Spring 1987

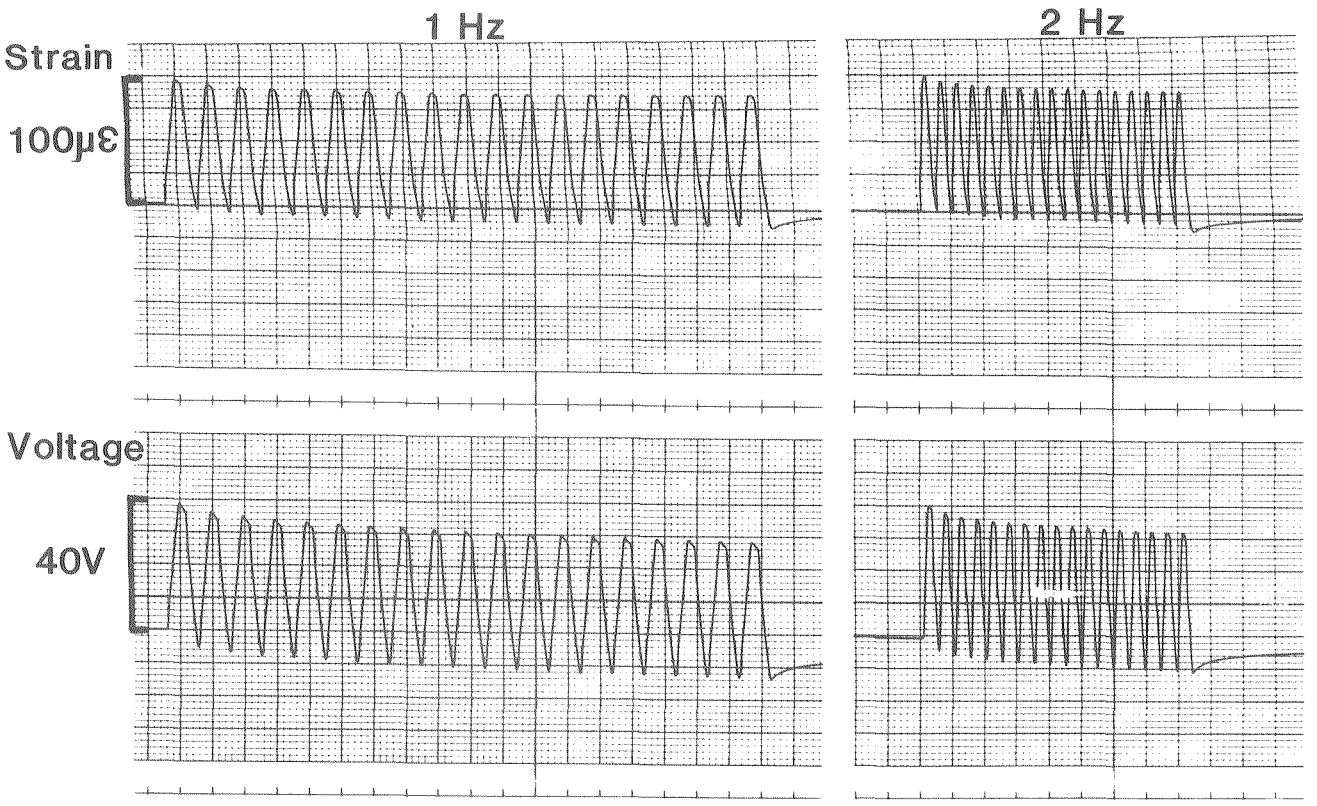

Figure 4
Results of bench-testing of prototype glass fiber and epoxy composite piezoelectric plates in four-point bending while attached to a tube simulating bone. *a*) Voltage generated at loading rate of 1 Hz and 2 Hz. *b*) Currents generated during the same tests using measurement circuit shown in *Figure 3*.

For *in vivo* tests during normal walking, satisfactory measurements of voltage and current and/or strain were made on several occasions 2 weeks or more postoperatively. These tests confirmed that these plates (on intact bone) could deliver peak-to-peak voltages of 25 V and rectified currents up to 0.3 μA while walking (peak strain of 150 με) (**Figure 5a**). Insulation resistance exceeded 100 MΩ in the successful tests.

Using external ultrasonic stimulation, currents far exceeding 20 μA easily were obtained (**Figure 5b**). Several hundred microamperes were often generated under ideal conditions of orientation of the ultrasonic transducer with respect to the implanted piezoelectric element.

DESIGN CONSIDERATIONS

Our initial design goal for a piezoelectric internal fixation plate was to produce a device capable of supplying direct currents in the range of 0.1–20 μA, in order to mimic the direct-current stimuli known to be effective in producing bone formation as shown by the well characterized model in rabbit tibia (1,10,12,15,25). Our animal tests have shown that this is a realizable goal, but achieving optimum output during either mechanical (physiologic) or ultrasonic activation of the piezoelectric element requires careful attention to design. The following design considerations, characteristics, and properties of these circuits should be of interest:

Size and Material Properties

1. **The first design consideration** involves the physical size of the piezoelectric element that must fit on or within an external fixation device. For bone plates of a typical (human) clinical size, the size of the piezoelectric element would be limited to a maximum thickness of 0.15 cm with an area of 1–2 cm^2, a size that could fit in a space between the central screw holes.

2. **The second design consideration** is how to

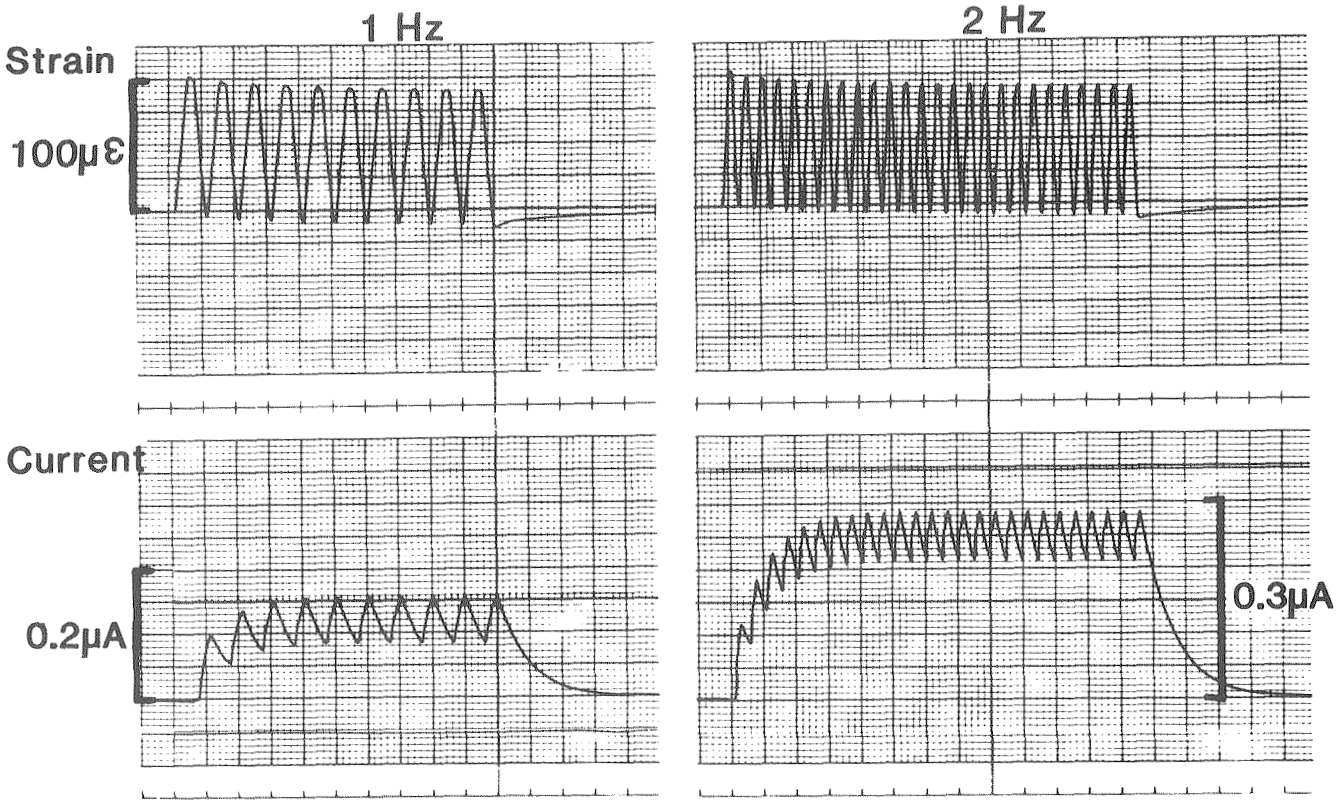

configure the piezoelectric element, within the size limits, in order to produce the necessary current and voltage output under clinical conditions. A piezoelectric ceramic material with a capacity to yield a high charge per unit force (pC/N) has been selected. For the present application, PZT–5H ceramic [piezoelectric constant $d_{31} = -274$ pC/N] appears to be the optimal choice. Use of piezoelectric polymers such as polyvinylidene fluoride (PVDF) would present more complex design problems.

The physical factors controlling short-circuit current and open-circuit voltage output are given by the expressions,

$$I_{sh} = \text{short circuit current} = 2Ad_{31}Sf \quad [1]$$

$$V_{op} = \text{open circuit voltage} = g_{31}St \quad [2]$$

where,

d_{31}, g_{31} = piezoelectric constants defined as,

$$d_{31} = \frac{\text{charge density produced}}{\text{applied stress}}$$

$$g_{31} = \frac{\text{open circuit field}}{\text{applied stress}}$$

A = surface area of piezoelectric element

f = frequency of applied stress

S = magnitude of applied stress

t = thickness of piezoelectric element

Thus, the current and voltage output characteristics of a given PZT element may be summarized as follows:

CURRENT OUTPUT:

1. The current is directly proportional to the *area* of the electroded surface of the element;
2. The current is directly proportional to the *amplitude* of the stress; and
3. The *average* current is directly proportional to the *frequency* of the stress.

VOLTAGE OUTPUT:

1. The voltage is directly proportional to the *amplitude* of the stress; and
2. The voltage is directly proportional to the *thickness* of the element. For example, a minimum thickness of 0.1 mm would be required in order to generate approximately 5 V peak-to-peak at 100 με from PZT ceramics.

Journal of Rehabilitation Research and Development Vol. 24 No. 2 Spring 1987

Alternative Excitation Mechanisms

For clinical use, the design of a piezoelectric internal fixation plate needs to include provision for generation of current by two different mechanisms: weightbearing (physiologic loading) and externally applied ultrasonic excitation. Each mechanism produces current by mechanical deformation of the piezoelectric element (direct piezoelectric effect), but achieving an effective output from either type of stimulus necessitates trade-offs in design because the load configurations are quite different.

The characteristics of these two modes of excitation are compared as follows.

In partial weightbearing excitation, walking can be expected to produce relatively large strains in the plate, probably in the range of 50–500 $\mu\varepsilon$ or more, with strains in the higher range produced before bone continuity has been achieved. Although the entire plate-and-bone structure would be subjected to axial compression and bending during weightbearing, the neutral plane typically will lie outside the thin piezoelectric element. Thus, in practice, the element would be subjected to slightly asymmetrical tension or compression, depending on the mechanical environment of the plate *in situ*. Walking occurs at low frequency (0.5–2 Hz).

Under these conditions, because of the relatively high strain magnitudes, even a thin PZT–5H element (0.5 mm thick) will generate well over 20 V during weightbearing. However, the low frequency of strain results in small (average) currents in spite of the large voltages. Given this low frequency, surface area becomes the most important factor. For a 1.5-mm thick PZT element (type PZT–5H, $d_{31} = -274$ pC/N) at 100 $\mu\varepsilon$ with a surface area of 1 cm^2, the maximum average current generated during walking is approximately 0.3 μA. Doubling the surface area doubles the available average current.

In contrast to the above, external ultrasonic excitation produces strains that are small (<50 $\mu\varepsilon$), and it offers a wide range of frequencies (100 kHz–10 MHz). The upper limit (probably 5 MHz) is determined by the need to minimize propagation

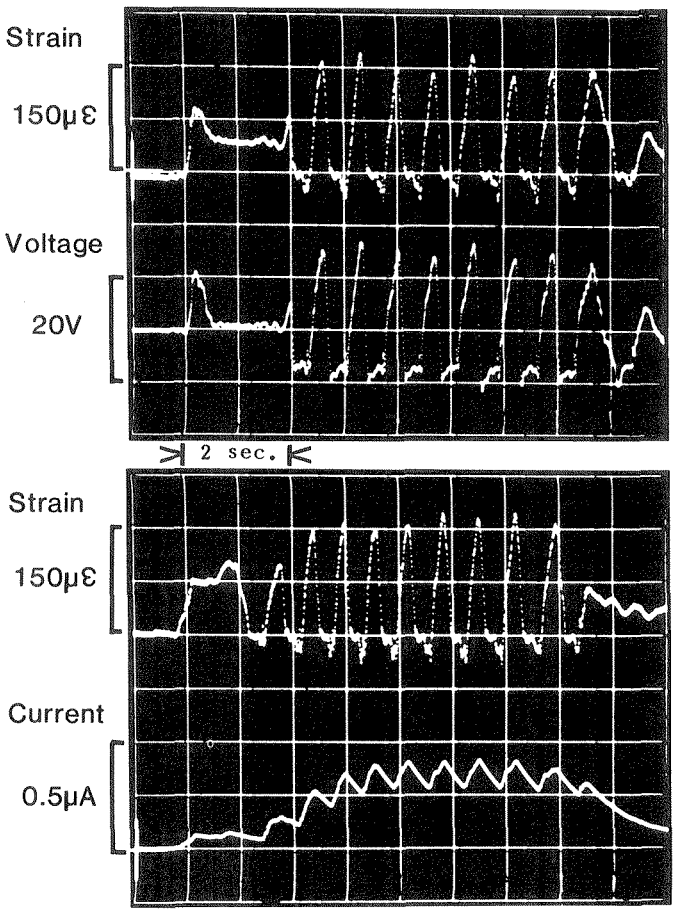

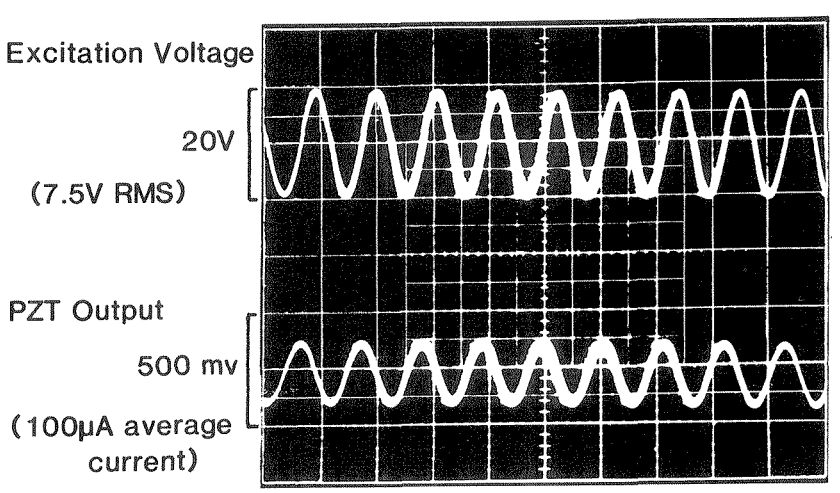

Figure 5
Typical results of *in vivo* tests. *a*) Voltage and current outputs from implanted fiberglass/epoxy composite PZT plate recorded during walking of test animal. *b*) Output of the implanted piezoelectric plate during ultrasonic stimulation. The upper trace is voltage input to the transducer and the lower trace is the output from implanted PZT plate.

losses through intervening tissue layers. The lower limit (probably 1 MHz) is determined by an acceptable thickness of the piezoelectric element.

For external ultrasound to activate the piezoelectric element, ultrasonic energy must travel through the intervening soft-tissue layers in order to excite the implanted ceramic. In soft tissues, ultrasonic energy in the higher frequencies is absorbed and scattered. To minimize propagation losses, it is necessary to keep the operating frequency down within the range of 1–2 MHz.

3. The third design consideration is related to the fact that, to obtain adequate output with either weightbearing or ultrasonic excitation, it may be advantageous to combine two layers of piezoelectric material in a sandwich construction. Since, during weightbearing, the predominant factor controlling the current magnitude is the surface area of the piezoelectric element, an ideal design would be a multilayer composite made of two or more thin, discrete elements physically bonded together but electrically insulated from each other, and electrically connected *in parallel*. This design would increase the surface area and therefore the available charge and current.

Unlike the weightbearing-excited element, an ultrasonically excited element yields currents in the order of 50 μA to 100 μA (due to the high frequency) but at a low voltage (due to the small strains). Since a minimum of 0.6 V is needed to overcome the losses that will come in rectification diodes, the design should aim to achieve adequate voltage at the expense of current. Here again, a multilayer element would be effective, but only if the separate elements could be connected *in series* during ultrasonic excitation.

Note that the bonded multilayer element discussed consists of separate insulated "monomorph" layers; it is not the same as a "bimorph" in which the two layers share a common central electrode. The bimorph configuration responds best to pure bending with equal and opposite strains on the two surfaces of the element, but in a plate bone situation the element would be subjected only to somewhat asymmetrical tension or compression (4,22).

4. The fourth design consideration relates to processing AC output of the piezoelectric element to deliver an effective DC microampere current. To accomplish this, a circuit must include switching, rectification, filtering, and control components.

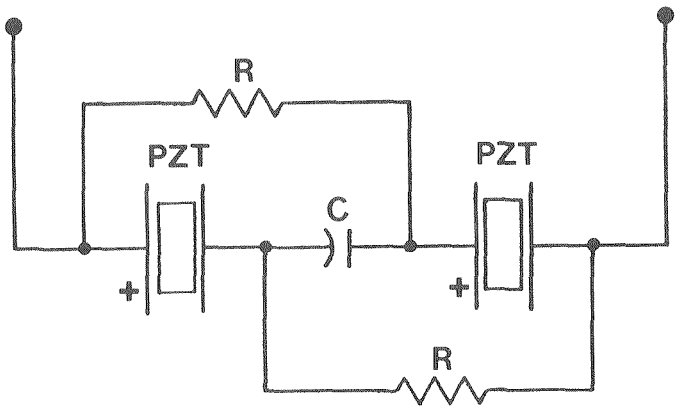

Figure 6
Circuit for operating the multilayer PZT elements in series mode at high frequencies (ultrasonic excitation) and parallel mode during low frequencies (walking).

For a multilayered design, the initial step involves switching to achieve maximum output by making a transition from parallel array (during weightbearing) to series array (during ultrasonic excitation). The solution shown in **Figure 6** avoids the necessity for any actual switching process. The principle of operation is as follows: at low frequencies (during walking), the capacitor C represents a high-impedance path whereas the resistors R represent a low-impedance path. In this case, the positive sides and negative sides of the two piezoelectric elements are each connected together in a parallel configuration. But at high frequencies (during ultrasonic excitation), the capacitor C presents the low-impedance path whereas the resistors represent the high-impedance path. As a result, the positive side of one element is now, in effect, connected to the negative side of the other, yielding a series configuration. (The value of C and R must be chosen according to the frequency of walking and ultrasonic excitation, to obtain this automatic parallel-series switching.)

For the rectification step, as much as 2.4 V can be lost in a standard rectifying bridge as each silicon diode requires approximately 0.6 V to bias it into conduction. Use of a two-diode (voltage doubler) type of bridge of Shottky diodes would reduce this loss to approximately 0.6 V or less while conserving most of the charge output. It is possible to use this special type of bridge because of the inherent capacitance of the piezoelectric generator (**Figure 7**). At least 1.5 V (and preferably 2 to 2.5 V) is necessary, following rectification, to drive the current- or voltage-limiting circuitry. Thus, an output voltage of 2.1–2.6 V from the piezoelectric element before rectification is the minimum required.

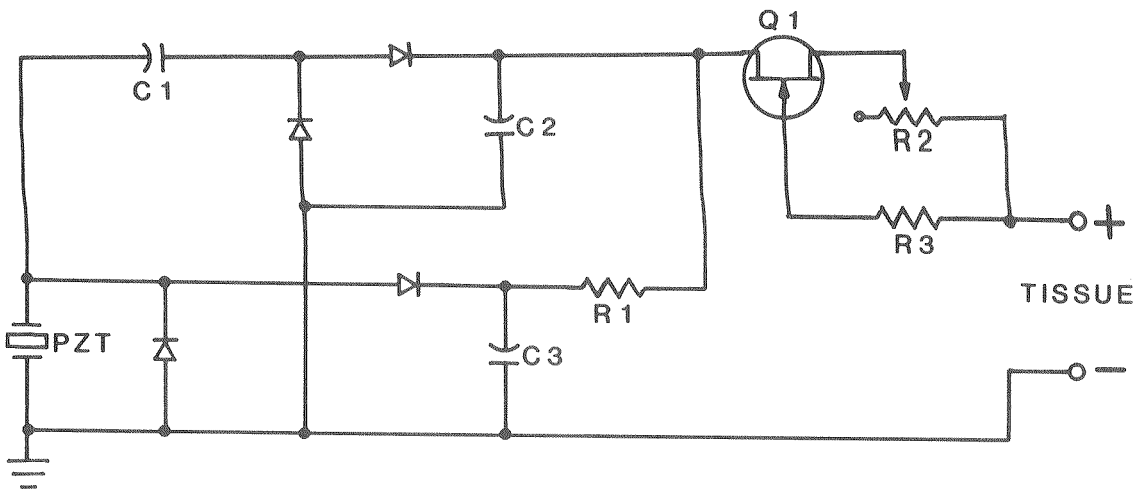

Figure 7
Combination circuit proposed for processing current generated by either ultrasound or weightbearing. In accepting the output from the PZT generator circuit shown in *Figure 6*, low-frequency signals from walking are blocked from the upper portion of the circuit by C1. R2 sets the current limit for ultrasonic stimulation. Output from weightbearing generation follows the lower part of the circuit where ripple is controlled by R1 and C3. Typical component values might be as follows: C1 = 220 pF; C2 = 0.033 μF; C3 = 1 μF; R1 = 50 KΩ; R2 = 1 MΩ; R3 = 330 KΩ; Q1 = JFET (2N4117) is selected because of its relatively low pinch-off voltage (0.7–1.5 V) to avoid waste of ultrasonically generated voltage.

To filter and control the output of the piezoelectric element, two different types of circuitry are required: one type to process the high-frequency, low-voltage current generated by ultrasound; and, the other to process the low-level, pulsed-current output delivered by the walking mode. A method of combining these two circuits in one is also shown in **Figure 7**. The high-frequency voltage created by ultrasound would be AC-coupled using a small capacitor, C1 (150 pF), that blocks the low-frequency voltages produced by walking; a path for those low-frequency voltages produced by walking is provided in parallel. Each half of the circuit would rectify its respective current using the two-diode bridge configuration referred to earlier. The transistor sets the limit for the maximum current delivered by ultrasonic excitation while the values of C3 and R1 would determine how "smooth" the "walking" current would be. A large value of the product R1 × C3 would smooth the current (at a low level) and a small value for R1 × C3 would produce a more spike-like current (proportional to the rate of strain produced during walking). This type of parallel system would work best when using a current limiting circuit with ultrasound, although voltage control might be developed if necessary by using a low-current, Zener-type shunt regulator circuit.

From these considerations, it is clear that an effective "piezoplate" must be a compromise design if it is to accept the two different modes of mechanical excitation, because most requirements for a piezoelectric element optimum for ultrasonic stimulation are opposite to those that would be optimum for weightbearing. In a plate for clinical use, all electronic components would have to be incorporated in an integrated form and built into the generator area of the device. Ideally, some way of monitoring the coupling characteristic for ultrasound would also need to be developed.

DISCUSSION

Our animal tests with human-scale implants in large dogs confirmed our earlier tests in beagles with miniature plates. They indicate that the concept of a piezoelectric internal fixation device is one that has a reasonable chance of successful development. In weightbearing tests, our outputs were below the maximum that might be seen clinically. This was because strains in the piezoelectric elements were quite low (20–150 με) since the underlying bone had been left intact in this research. Also, a material problem caused some softening of the fiber composite plates *in vivo*, which tended to reduce transmission of strain to the elements.

To achieve further development of these devices

in line with our design analysis, five major problems must be dealt with, as follows:

1. A demonstration of the effectiveness of piezoelectrically generated currents in stimulating bone formation. To provide this, we are employing the proven rabbit-tibia model of Friedenberg and associates (12). Work is being directed toward comparing bone formation produced by currents generated by a piezoelectric ceramic with those generated by a battery.

2. Packaging the components into a prototype "piezoplate." Because a "less rigid" type of plate design is an obvious advantage, a fixation plate of fiber-reinforced composite, or titanium, is a natural choice for the stabilizing component.

For the stimulatory component, appropriate design of integrated circuitry is essential; packaging problems are to be expected here in maintaining adequate structural strength and high insulation resistance over long periods.

For electrodes used to deliver current to the fracture site, platinum is preferred because it has been shown to stimulate osteogenesis at lower currents (10). Two platinum cathodes emerging from the plate on short flexible leads are envisioned for placement at the fracture site. An anode placed on top of the plate in contact with soft tissues would also be platinum.

Mechanical compliance between components is also a key factor.

3. For preclinical testing for a prototype "piezoplate," two types of in vivo testing would be appropriate. First, using the canine model of Harris et al. (15) in dogs or sheep, a plate attached to the femur with a cathode inserted into the tibia would permit tests of effects on medullary bone formation in response to controlled periods of exercise, or ultrasonic excitation. Second, it would be desirable to test the device on a nonunion model in dogs or sheep. An ideal model would involve a transverse radial or ulnar osteotomy with a gap size such that, with plate fixation but no electrical stimulation, healing would occur in 50 percent within 12 weeks. Then effects of active versus dummy piezoelectric plates could be assessed on bilateral defects in the same animal. Unfortunately, no model of that specification has been documented yet with plate fixation, although that of Harris et al. (15) provides a basis for further experiment.

The size of the defect is critical because it is also generally acknowledged that microampere electric currents have no effect in altering healing of bone defects that are large enough to have no tendency to bridge on their own (3,6,15).

In conclusion, much development work remains, but piezoelectric plates offer promise for creation of a new class of orthopaedic implants that combine the duties of internal fixation and electrical stimulation in facilitating fracture healing. Augmenting current generation by externally applied low-energy ultrasound represents an important added dimension, and offers an opportunity to control electrical output over a wide range of current values.

In addition to an opportunity to create a plate that might reduce the incidence of nonunions, this concept has possible applications in fixation of internal prostheses. While Park (19) had little success with bone growth into porous piezoelectric ceramics under physiologic loading, bone growth into such coatings on prosthesis stems might actually be initiated using external ultrasonic excitation. Conceivably, this capability might make it possible to initiate and control bone growth into an area of porous piezoelectric ceramic or polymer on a prosthesis stem, and then even to initiate resorption of bone ingrowth using higher currents (>100 μA) if removal were indicated. An implanted piezoelectric generator might be used instead of a battery to deliver current to stimulate bone growth into porous metallic coatings (8,23), or to power other types of implanted bone stimulation devices. Further research is in progress on these promising avenues of development for orthopaedics.

ACKNOWLEDGMENTS

We wish to thank Ms. Mary Woods and Ms. Mary Mistrulli for their valuable assistance in preparation of the manuscript, Teresa Geelan for administrative assistance, and Gerald Mahaffey for technical assistance.

REFERENCES

1. BARANOWSKI TJ, BLACK J, BRIGHTON CT, FRIEDENBERG ZB. Electrical osteogenesis by low direct current. *J Orthop Res* 1:120–128, 1984.
2. BRIGHTON CT (Ed.): Symposium on electricallv induced osteogenesis. *Orthop Clin North Am* 15:1–179, 1984.
3. BRIGHTON CT, BLACK J, FRIEDENBERG ZB, ESTERHAI JL, DAY LJ, CONNOLLY JF. A multicenter study of the treatment of nonunion with constant direct current. *J Bone Joint Surg (Am)* 62:2–13, 1981.
4. COCHRAN GVB, JOHNSON MW, KADABA MP, VOSBURGH F, FERGUSON-PELL MW, PALMIERI VR. Piezoelectric internal fixation devices: A new approach to electrical augmentation of bone healing. *J Orthop Res* 3:508–513, 1985.
5. COCHRAN GVB, JOHNSON MW, WILLIAMS WS. The piezoelectric internal fixation device: A new concept for electrical stimulation of bone healing. Paper #39. In *Trans. 4th Ann BRAGS*, Kyoto, Japan, 1984. In *Bioelectric Repair and Growth*. E. Fukada et al. (Eds.). Nishimura Co. Ltd., Niigata, Japan, 1985, pp. 166–170.
6. COCHRAN GVB, PALMIERI VR, SLOVAK DS. Observations on effects of faradic electrical stimulation on large bone defects and cortical transplants. In *Bioelectric Repair and Growth*. E. Fukada et al. (eds.). Nishimura Co. Ltd., Niigata, Japan, 1985, pp. 239–242.
7. COCHRAN GVB, PAWLUK RF, BASSETT CAL. Electromechanical characteristics of bone under physiologic moisture conditions. *Clin Orthop* 58:249, 1968.
8. COLELLA SM, MILLER AG, STANG RG, STOEBE TG, SPENGLER DM. Fixation of porous titanium implants in cortical bone enhanced by electrical stimulation. *J Biomed Mat Res* 15:37–46, 1981.
9. DYMECKI SM, BLACK J, BRIGHTON CT. The cathodic potential dose response relationship for medullary osteogenesis with stainless steel electrodes. Paper #29 In *Trans.* 4th Ann BRAGS, Kyoto, Japan, 1984. In *Bioelectric Repair and Growth,* E. Fukada et al. (eds.). Niigata, Japan: Nishimura Co., Ltd., 1985, pp. 293–295.
10. DYMECKI SM, BLACK J, NORD DS, JONES SB, BARANOWSKI TJ, BRIGHTON CT. Medullary osteogenesis with platinum cathodes. *J Orthop Res* 3:125–126, 1985.
11. FICAT JJ, ESCOURROU G, FAURAN MJ, DURROUX R, FICAT P, LACABANNE C. Osteogenesis induced by bimorph polyvinylidene fluoride films. *Ferroelectrics* 51:121–128, 1983.
12. FRIEDENBERG ZB, ZEMSKY LM, POLLIS RP, BRIGHTON CT. The response of nontraumatized bone to direct current. *J Bone Joint Surg* 56-A:1023–1030, 1974.
13. FUKADA E, TAKAMATSU T, YASUDA I. Callus formation by electret. *Japan J Appl Phys* 14:2079–2080, 1975.
14. GROSS D AND WILLIAMS WS. Streaming potentials and the electromechanical response of physiologically-moist bone. *J Biomech* 15:277, 1982.
15. HARRIS WH, MOYEN B, THRASHER EL, DAVIS LA, COBDEN RH, MACKENZIE H, CYWINSKI JK. Differential response to electrical stimulation. *Clin Orthop* 124:31–40, 1977.
16. INOUE S, OHASHI T, FUKADA E, ASHIHARA T. Electric stimulation of osteogenesis in the rat: Amperage of three different stimulation methods. In *Electrical Properties of Bone and Cartilage*, Brighton CT et al. (eds.). New York: Grove and Stratton, 1979, pp. 199–213.
17. JOHNSON MW, CHAKKALAKAL DA, HARPER RA, KATZ JL. Comparison of the electromechanical effects in wet and dry bone. *J Biomech* 13:437–442, 1980.
18. KRAUS W. U.S. Patent #4,214,322, July 29, 1980.
19. PARK JB, KELLY BJ, KENNER GH, VON RECUM AF, GRETHER MF, COFFEEN WW. Piezoelectric ceramic implants: *in vivo* results. *J Biomed Mat Res* 15:103–110, 1981.
20. PARK JB, KENNER GH, BROWN SD, SCOTT JK. Mechanical property changes of barium titanate (ceramic) after *in vivo* and *in vitro* aging. *Biomat Med Devices Artif Org* 5:2,267–276, 1977.
21. PARK JB, VON RECUM AF, KENNER GH, KELLY BJ, COFFEEN WW, GRETHER MF. Piezoelectric ceramic implants: A feasibility study. *J Biomed Mat Res* 14:269–277, 1980.
22. PIENKOWSKI D AND POLLACK SR. The origin of stress-generated potentials in fluid-saturated bone. *J Orthop Res* 1:30–41, 1983.
23. SALMAN NN AND PARK JB. The effect of direct electrical current stimulation on the bone/porous-metallic-implant interface. *Biomaterials* 1:209–213, 1980.
24. SCHUMACHER D, STRUNZ V, GROSS U. Does piezoceramic influence avian bone formation in the early postoperative phase? *Biomaterials* 4:215–217, 1983.
25. SPADARO JA. Electrically enhanced osteogenesis at various metal cathodes. *J Biomed Mat Res* 16:861–873, 1982.
26. SUSUKI 1976, quoted by Ficat JJ et al. *Ferroelectrics* 51:121–128, 1983.
27. TAKAMATSU T, SASABE H, OKADA K. Callus formation by the piled polymer electret. Paper #38. In *Trans 4th Ann BRAGS*, Kyoto, Japan, 1984.
28. YASUDA I. Electrical callus and callus formation by electret. *Clin Orthop* 124:53–56, 1977.
29. ZIMMERMAN M, PARSONS JR, ALEXANDER H, WEISS AB. The electrical stimulation of bone using a filamentous carbon cathode. *J Biomed Mat Res* 18:927–938, 1984.