Veterans Administration

Journal of Rehabilitation Research and Development Vol. 24 No. 4
Pages 217–220

Consonant burst enhancement: A possible means to improve intelligibility for the hard of hearing

R. W. GUELKE
University of Stellenbosch, Faculty of Medicine, ENT Department, Tygerberg 7505, South Africa

Abstract—The possibility of using a circuit to amplify selectively the burst of a stop consonant is investigated. It is shown that such a circuit used in the speech channel of an amplifying system can improve the discrimination between stop consonants. Such a system could be of value in assisting the hard of hearing.

INTRODUCTION

Communication with the hard of hearing is normally achieved by means of a hearing aid in which speech is presented at a higher intensity level. Hearing aids, however, do not recode the speech signal to facilitate the recognition of particular speech elements. This paper describes an attempt to improve intelligibility by using electronic circuits to identify and modify particular elements of speech in such a manner as to improve their chances of recognition.

If the components of speech are analyzed, it is clear that combinations of a limited number of components (phonemes) are used to convey large quantities of information. Although each component is not necessarily of equal importance, it is more likely that maximum intelligibility will be achieved if every component is recognized. Sometimes it is indeed possible to interpret the message correctly in the absence of some of the elements (4, 6). It is, for example, well known that if all the vowels are removed from a text in English it is often possible to follow the meaning from the consonants alone. Nevertheless, recognition of each individual component is a goal to aim at.

In normal speech, the various components vary considerably in their intensity. Vowels usually contain more acoustic energy than consonants (2). An interesting group of consonants in which the acoustic energy is low (because the amplitude is low and the duration is short) is the group known as the plosives or stop consonants (/p, t, k, b, d, g/).

The acoustic waveform of a typical stop consonant is shown in **Figure 1**. The key components of this waveform are 1) a gap, corresponding to the break in voicing resulting from closure of the vocal tract, 2) a burst of frication (high frequency noise), known as the consonant burst, followed by 3) a transitional region containing the onset of voicing and leading into the following vowel.

It has been shown that the information available to distinguish one stop consonant from another is located mainly in the burst (3). From the oscillogram it is also clear that the amplitude of the burst is much smaller than the amplitude of the following vowel.

Stop Consonant Enhancement

The suggestion is now put forward that if it were possible to increase the amplitude of the burst of a stop consonant up to the level of the vowel in normal speech it could result in increased intelligibility by preserving information that would otherwise be inaudible to a hearing-impaired person. The increase in intensity following the gap would also, by itself, indicate the presence of a stop consonant.

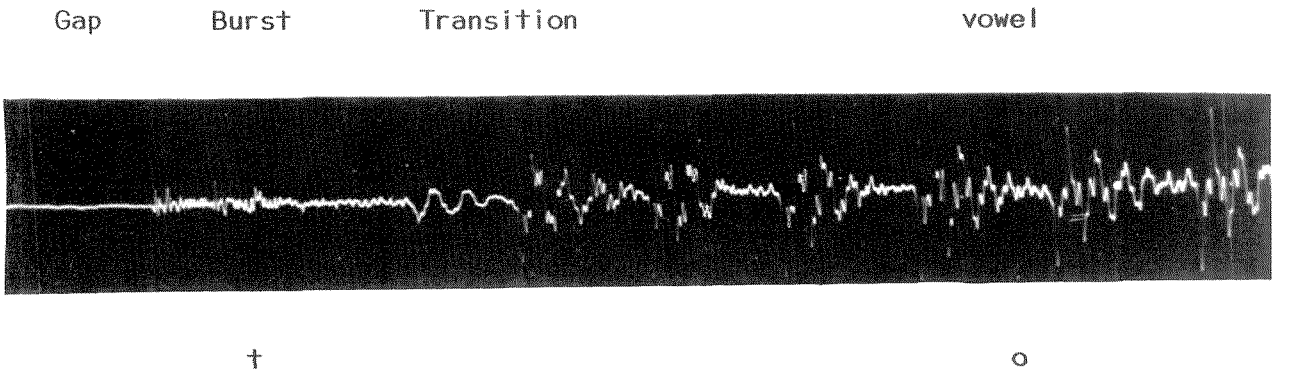

Figure 1.
Oscillogram of a stop consonant. The key components of the consonant /t/ in the word *pentode* are shown.

TEST RESULTS

Circuits have been developed that are able to identify a stop consonant. The block diagram of such a circuit is shown in **Figure 2**. Once the stop consonant is identified, the output of the circuit is used to increase the amplification for a suitable period. **Figure 3** shows the waveform of a stop consonant vowel pair that has been processed by this system.

An investigation was carried out by F. V. Ashpole (1) into the effect of burst enhancement on speech intelligibility. Listening tests were designed to determine to what extent improved discrimination of a stop consonant could be achieved by increasing the amplitude of the burst.

In the test, nonsense syllables were used and listener responses were analyzed in terms of confusion matrices as described by Miller and Nicely (5). Four talkers were used and for each talker three listeners recorded their assessment of the stop consonant uttered. The listeners were required only to distinguish between the six stop consonants. It is in the nature of the presentation that the increased amplification indicates definitely the presence of a stop consonant, so that in general it can be assumed that not only is there an increase in the discrimination between the consonants but there is also a definite indication that a stop consonant has been uttered when the amplified burst is perceived. The confusion matrices resulting from a particular test are shown in **Figure 4**. In the example, two tests were carried

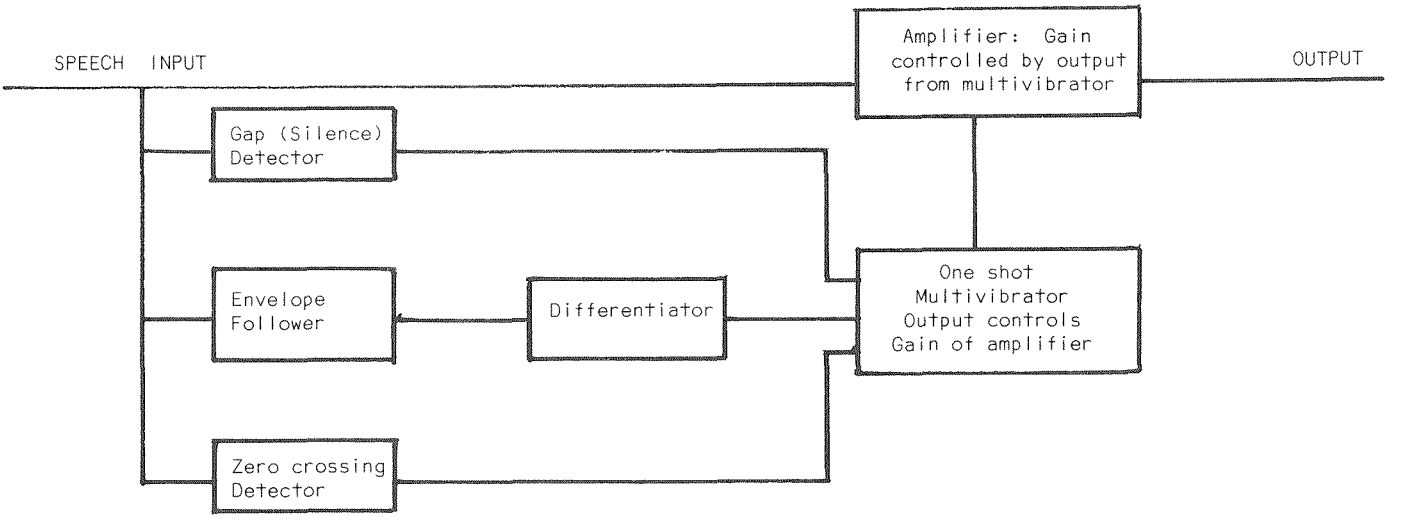

Figure 2.
Burst enhancement circuit, block diagram.

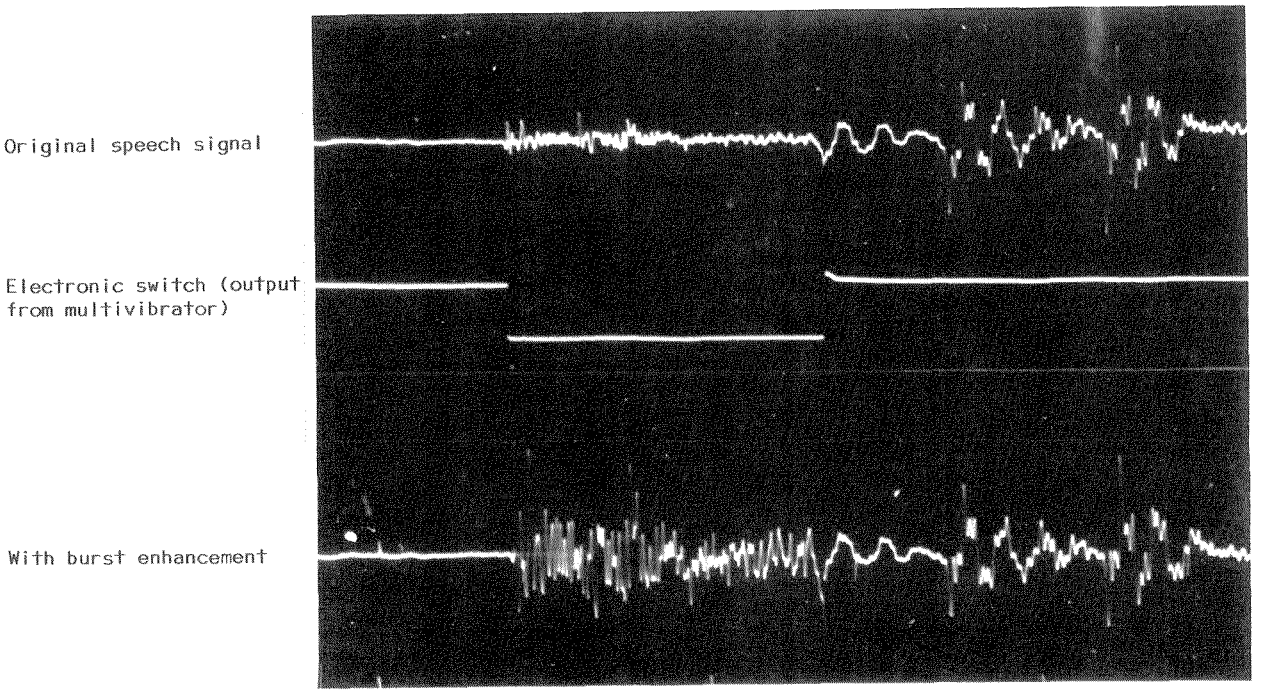

Figure 3.
Oscillogram showing the action of the consonant burst enhancement circuit. The top trace shows the original speech signals. The middle trace shows the output of the electronic switch. The lower trace shows the modified speech signal with burst enhancement.

RESPONSE

TALKER UTTERANCE	/g/	/b/	/d/	/t/	/p/	/k/
/g/	31	1	7			
/b/	5	28	6			
/d/	14	1	24			
/t/				14	13	12
/p/				14	13	12
/k/				13	16	10

Masked, no enhancement 51% correct

RESPONSE

	/g/	/b/	/d/	/t/	/p/	/k/
/g/	37		2			
/b/	2	34	3			
/d/	3		36			
/t/				39		
/p/				4	28	7
/k/				2	1	36

Masked, enhanced 17 dB for 24 mS 90% correct

LISTENER RESPONSE

THROUGH BAND PASS FILTER 300-3 000 Hz

Figure 4.
Confusion matrices showing effect of burst enhancement. Listener responses are shown with and without enhancement. The signals were masked with noise to achieve roughly 50 percent correct identifications with no enhancement. All signals were passed through a 300 to 3,000 Hz bandpass filter.

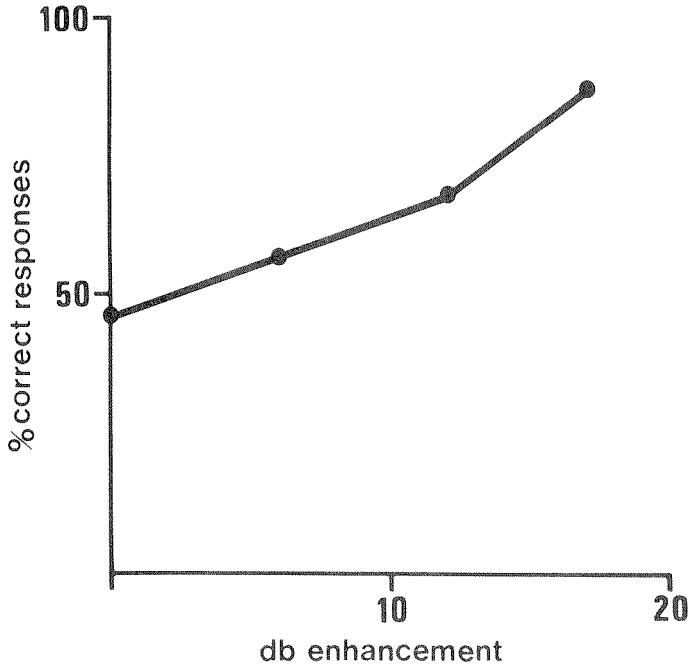

Figure 5.
Percent correct of responses shown as a function of degree of enhancement.

out, both in the presence of the same masking noise (one with burst enhancement, the other without). With enhancement the responses were 90 percent correct, whereas without enhancement only 51 percent were recognized correctly.

Confusion matrices were determined for the following conditions: enhancement of 9.5 dB, 15.5 dB, and 17 dB and for burst enhancement periods of 14, 17.5, 24, and 40 milliseconds.

Figure 5 shows the relationship between the percentage of correct responses and the amount of enhancement used. This result was obtained from 156 judgements for each stop consonant presented. The complete figures are given by Ashpole (1). In this test the sound level of the speech was 58 dB above 20 micropascals and the masking noise 64 dB above 20 micropascals.

DISCUSSION

The results obtained indicate that consonant burst enhancement is able to increase the total information content available to a hearing impaired listener. At first, it was considered that a facility of this sort would be useful for public address systems for use in noisy conditions (e.g., in airports). Some rough tests, however, seemed to indicate that no great advantage ensues. The obvious explanation is that the intensity pattern of the reproduced speech is changed, which, because the pattern is now unfamiliar, reduces any advantage due to the increased information content made available.

For hard of hearing persons, however, it would be possible for them to be trained to accept the changed intensity pattern. A test program designed to evaluate such a system would necessitate the production of a number of hearing aids fitted with consonant burst enhancement circuits.

CONCLUSIONS

It would appear that a hearing aid incorporating consonant burst enhancement would be of possible assistance to hard-of-hearing persons. There is considerable evidence that such a device could be useful. But, it is not clear to what extent it could be of advantage compared with a conventional hearing aid. Some noises could be disturbing, however. Nevertheless, an investigation into such a hearing aid should be well worthwhile.

REFERENCES

1. **Ashpole FV:** Selective Amplification of Stop Consonants. Ph.D. Thesis, University of Cape Town, 1962.
2. **Fletcher H:** *Speech and Hearing in Communication*. New York: D. van Nostrand, 1953.
3. **Guelke RW and Smith ED:** Distribution of information in stop consonants. *Proc IEEE* 10(4):680–689, 1963.
4. **Haggard MP:** The perception of speech. In *Introductory Hearing Science*, SE Gerber (Ed.). Philadelphia: WB Saunders, 1974.
5. **Miller CE and Nicely PE:** An analysis of perceptual confusion among some English consonants. *J Acoust Soc Am* 27:338, 1955.
6. **Stevens KN and House AS:** Speech Perception. In *Foundations of Modern Auditory Theory*, Vol. 2, JV Tobias (Ed.). New York: Academic Press, 1972.