Department of Veterans Affairs

Journal of Rehabilitation Research and Development Vol. 27 No.1
Pages 9–20

# Operator performance in myoelectric control of a multifunction prosthesis stimulator

**Todd L. Daley, BScE, MScE; Robert N. Scott, BSc, DSc; Philip A. Parker, BScE, MSc, PhD; Dennis F. Lovely, BSc, PhD**
*Bio-Engineering Institute and Department of Electrical Engineering, University of New Brunswick, Fredericton, New Brunswick, Canada, E3B 5A3*

**Abstract**—In this paper, a microcomputer-based system is described which facilitates the evaluation of different myoelectric control strategies. The system is based on an IBM-PC/AT microcomputer which generates and develops tracking targets, processes and displays the operator's response, and computes tracking performance. The dynamics of the prosthetic elbow, hand, and forearm are simulated in software which drives a stick figure in response to the operator's input. Performance is measured in terms of integral absolute error in target-response match. Control strategies to simulate different systems are easily modified through software and are evaluated under identical conditions. As a test of this evaluation system and to obtain some comparative data on control strategies, four strategies which are either in use or proposed for use are evaluated. The test procedure is divided into a control training session and a control evaluation session. Data collected from groups of three normally-limbed subjects per strategy over a period of five control evaluation sessions are presented. The results of this evaluation are discussed and improvements in the evaluation system suggested.

**Key words:** *multifunction, myoelectric control, operator performance.*

Address all correspondence and reprint requests to: Robert N. Scott, Director, Bio-Engineering Institute, University of New Brunswick, Fredericton, NB, Canada, E3B 5A3.

This study was supported in part by a grant (#A-1083) from the Natural Sciences and Engineering Research Council of Canada.

## INTRODUCTION

Many operator performance studies which use some unique multifunctional myoelectric control strategy for a prosthesis have been conducted. Few studies have compared the results from different control strategies. In order to make such comparisons, an evaluation system must be developed which can be adapted easily to the various strategies and which provides comparable performance data.

The myoelectric signal (MES) is that signal which is derived from electrodes placed over, or in, a contracting muscle. The details of its derivation are not within the scope of this paper. The MES has a mean of zero, and a variance which increases with the strength of contraction. A control strategy (CS) can be defined as the method in which the MES can be used to effect control of some device. In this research, the concept of a control strategy is central.

This study is concerned with multifunction prostheses, specifically those which include an electric elbow and an electric hand. Hand and elbow functions comprise the greatest loss in the case of a person with an above-elbow amputation. Thus, a study of different methods of accomplishing myoelectric control of these functions is appropriate.

Many operator performance studies have been conducted using myoelectric (ME) control systems for multifunction prostheses. In many of these studies the measure of operator performance is the success rate in producing the muscle contractions

DOI: 10.1682/JRRD.1990.01.009

Journal of Rehabilitation Research and Development Vol 27 No 1 Winter 1990

which activate the different prosthetic functions. This type of study generally incorporates some type of visual feedback which indicates to the operator the result of the muscle contractions produced.

The task of producing unique muscle contraction patterns is significantly different than the "real" task of controlling the motions of a prosthesis. Therefore, testing an individual's ability to produce the required contractions may not yield an accurate prediction of ability to control a prosthesis.

Many performance studies have focused on one particular control strategy. Since all of these studies are ultimately unique, operator performance abilities observed in one study, using one control strategy, cannot be compared to the results of another study.

Consequently, there is a need for an evaluation scheme whereby operator control performances in different strategies can be compared. To achieve this goal, a custom-designed test system was developed, using an IBM-PC microcomputer, to perform the required comparative study. This paper describes the system that was developed, and presents preliminary results using 12 volunteer subjects with sound limbs.

It is recognized that 12 is a small sample size, and more importantly that these subjects at best, can give only an approximation to the amputee-controlled performance. The control training of able-bodied volunteers is facilitated by proprioceptive feedback and muscle output ranges which may not be available to those with an amputation. These factors limit the strength of any conclusions from the present study regarding control strategy. However, the primary objective is to report on an evaluation system, and the evaluation data are presented strictly as preliminary data.

## CONTROL CLASSES

Identification of five control strategy classes was made from a literature review. The classes identified are: 1) level coding of 1 ME channel; 2) level coding of 2 ME channels; 3) rate of contraction coding; 4) pattern recognition of processed ME signals; and, 5) pattern recognition of "raw" ME signals.

Level coding of one ME channel recognizes the contraction level using the processed MES. This type of ME control system has been tested widely (3,4,5,6,16,17,18,24,27). The MES processor is generally a full-wave rectifier and low-pass filter combination. This produces a DC voltage level which varies with the contraction strength. The optimum target levels and decision boundaries in terms of the processed signal have been derived by Parker *et al.* (19), for use in a single channel, level-coded ME control system.

Level coding of two ME channels recognizes the coordinated contraction levels of two muscles using their processed MES (13,15,20-22). For example, such a system might actuate elbow flexion or extension by using independent contractions of the biceps or triceps muscles respectively. In addition, the hand might be actuated by contracting simultaneously both of these muscles. A simultaneous contraction of both muscles is defined here as a "co-contraction." A small co-contraction would open the hand, and a large co-contraction would close the hand. This example is one of the many ways that two ME control channels can implement four functions.

Rate of contraction coding recognizes the initial rate of change in the contraction level of the controlling muscle (20-23). In this way, the different prosthesis functions can be controlled. One system of this type recognizes the rate of contraction and the subsequent contraction level of the muscles in the upper arm (22). This system implements a two-function prosthesis (elbow and hand).

Pattern recognition of processed ME signals refers to that control class which identifies unique patterns of ME activity in the residual limb. Some control strategies of this type rely on the "phantom limb" sensation. These control strategies generally employ five or more ME channels (1,2,12,16,26,27).

Pattern recognition of raw ME signals generally uses very few ME channels (1 or 2) to effect control of a multifunction prosthesis. The basic task is the same as for the previously described pattern recognition systems. Those who have an amputation must produce unique contraction patterns. This class of control strategies, though, recognizes these unique contraction patterns by use of mathematical modeling of the raw MES (7-11,14).

Of the five control classes identified, two-channel level coding is by far the most widely used and accepted means of establishing ME control of a multifunction prosthesis. Thus, four different implementations or strategies of this class were identified

as reasonable implementations and used in a microcomputer-based testing system.

## CONTROL STRATEGIES

The control strategies used are represented in **Figures 1 to 4**. The X and Y axes of each graph represent the control signal voltage obtained by processing the MES of the biceps brachii and triceps brachii muscles respectively. Each of the control strategies used in the study partitions the signal space into four active regions. These areas are identified as 1, 2, 3, 4 in the **Figures**. The speed of prosthesis motion is proportionally controlled in all strategies. Regions of the quadrant not assigned to a function are "dead zones," i.e., hand and elbow are both OFF. The assignment of function to regions is arbitrary at this point. Details of the four control strategies are presented below.

### Control Strategy 1 (CS1)

This control strategy (**Figure 1**) is essentially a three-state system for each of the two control channels. For each operating region, the corresponding speed of the prosthesis is proportional to the radial distance from the lower boundary of the region to the operating point defined by the relative contraction strengths of each controlling muscle.

The angles $\alpha$ and $\beta$ determine the degree of independent contraction required to select each state. Since the optimal angle settings are unknown, these are fixed arbitrarily at 30 degrees.

The threshold levels, or decision boundaries, are calculated using the statistical model developed by Parker *et al.* (19). This model uses the resting level ME activity and the level of ME activity at a maximum comfortable contraction. To summarize the method of calculating these decision boundaries using the processed MES:

$M_L$ = Measured resting level (processor output)
$M_H$ = Measured maximum level (processor output)
$S_1$ = lower decision boundary value
$S_2$ = upper decision boundary value
where:

$$S_1 = \sqrt{M_L*(M_L*M_H)/(M_H - M_L)*\ln(M_H/M_L)}$$

$$S_2 = \sqrt{M_H*(M_L*M_H)/(M_H - M_L)*\ln(M_H/M_L)}$$

### Control Strategy 2 (CS2)

This control strategy (**Figure 2**) incorporates a two-state ME control system for each of the two controlling muscles. The triceps muscle controls elbow extension and the biceps muscle controls elbow flexion. The hand is operated using a three-

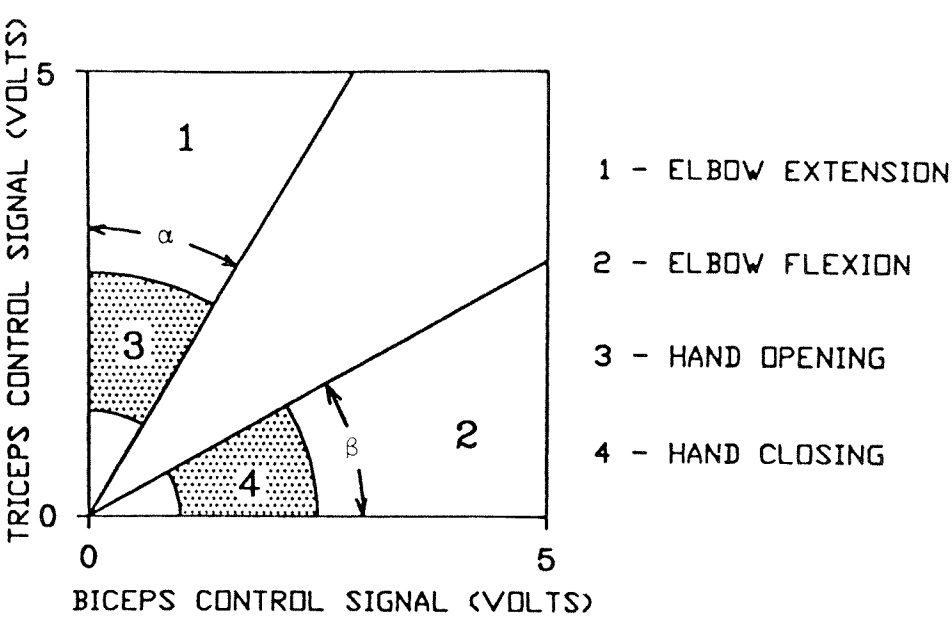


**Figure 1.**
*Control Strategy 1.* 1: elbow extension; 2: elbow flexion; 3: hand opening; 4: hand closing.

Journal of Rehabilitation Research and Development Vol 27 No 1 Winter 1990

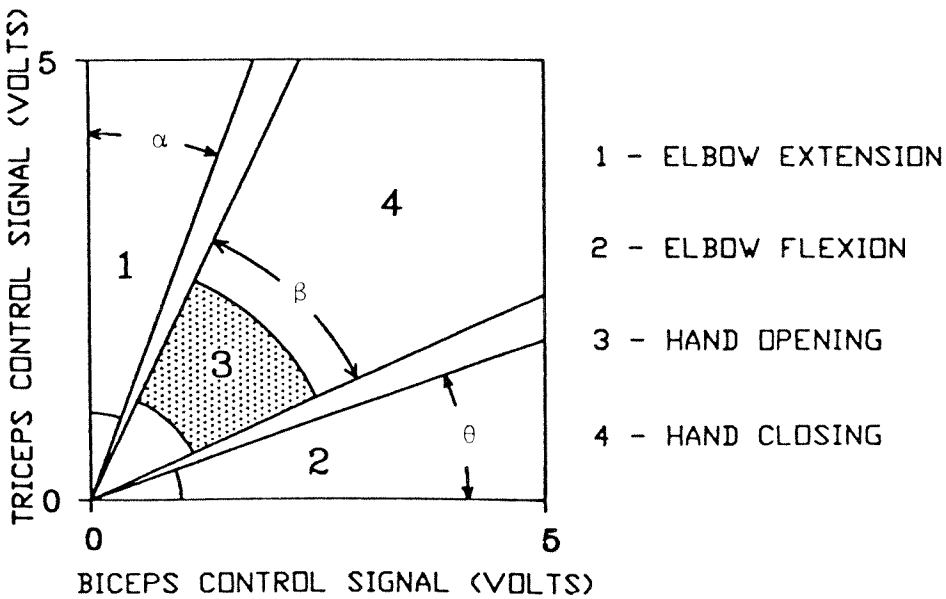


**Figure 2.**
*Control Strategy 2.* 1: elbow extension; 2: elbow flexion; 3: hand opening; 4: hand closing.

state co-contraction system which requires the simultaneous contraction of both biceps and triceps muscles. In this particular implementation, hand closing is obtained with a strong co-contraction and hand opening is obtained with a slight co-contraction. For each operating region, the corresponding prosthesis speed is proportional to the radial distance from the lower decision boundary to the operating point. The decision boundaries are calculated as in CS1 using the model developed by Parker *et al.* (19).

As with CS1, it is difficult to know the optimum angle settings; thus, they are set to default values in most instances. These default values were determined as reasonable from preliminary trials and are:

$$\alpha = 20° \; ; \beta = 40° \; ; \theta = 20°$$

**Control Strategy 3 (CS3)**

In this control strategy (**Figure 3**), four operating states are defined by the relative activity of the biceps to triceps controlling muscles. Consequently, the angular regions ($\alpha,\beta,\theta,\delta$) correspond to the control states. Each of these angular regions implements a two-state ME control system. The prosthesis speed is proportional to the radial distance from the lower threshold to the operating point in each region. The thresholds are calculated using the model developed by Parker *et al.,* (19) and are based on the two-state ME control system for one muscle. The method of calculating the angles is similar to the method used for CS2. Generally the default values used are:

$$\alpha = 10° \; ; \beta = 28° \; ; \theta = 28° \; ; \delta = 10°$$

**Control Strategy 4 (CS4)**

Inclusion of this control strategy (**Figure 4**) was suggested to the authors by the research staff at the Liberty Mutual Research Center. Each muscle uses a two-state mechanism which is devoted to either elbow operation or hand operation. To extend the elbow, the operating point must be in the region denoted 1,3; to flex the elbow, the operating point must be in the area 2,4. The active states during elbow operation are 1 and 2. If hand operation is desired, one must first switch the operating regions from elbow to hand. This is done by a large co-contraction which places the operating point within the shaded rectangular region along the diagonal. The strategy will subsequently employ hand control when the operating point is in areas 1,3 or 2,4. In this case, the active states are 3 and 4. The system will revert to elbow control if the operating point is placed (by relaxation of both muscles) within the triangular region near the graph's origin

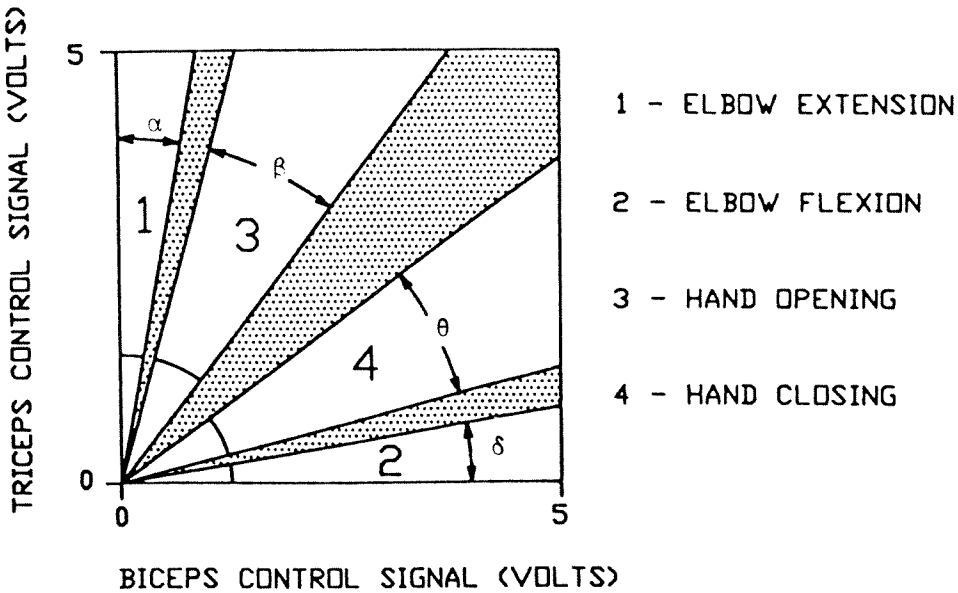


**Figure 3.**
*Control Strategy 3.* 1: elbow extension; 2: elbow flexion; 3: hand opening; 4: hand closing.

for at least one second. Proportional speed control is derived from the perpendicular distance from the operating point to the diagonal line which defines the edge of the operating region. Thus, maximum prosthesis speed is obtained by placing the operating point at the upper left or lower right corners of the graph, as this corresponds to a maximum perpendicular distance from the diagonal line. This also corresponds to a maximal independent contraction of one muscle. The various switching levels are calculated using the model developed by Parker *et al.* (19).

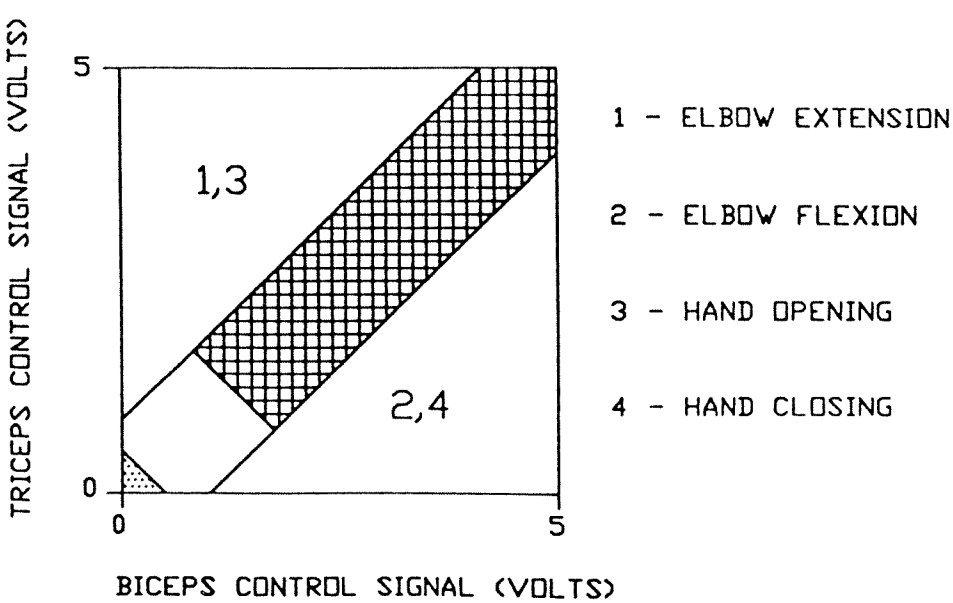


**Figure 4.**
*Control Strategy 4.* 1: elbow extension; 2: elbow flexion; 3: hand opening; 4: hand closing.

Journal of Rehabilitation Research and Development Vol 27 No 1 Winter 1990

## TEST SYSTEM

The testing was carried out with three subjects assigned to each of the control strategies. All were volunteers with sound limbs, right-handed, between 20-26 years of age, with no previous myoelectric control experience. Assignment to the different groups was carried out randomly.

A block diagram of the test system is shown in **Figure 5**. The subject is seated in a chair to which the subject's forearm was strapped. Dome-shaped, 10 mm diameter stainless steel bipolar electrodes with interelectrode spacing of 20 mm center to center, are affixed to the skin surface over the bulk of the biceps and triceps brachii muscles of the subject's right arm with the electrode pair axis aligned with the muscle fiber axis. A ground plate electrode is affixed to the skin surface over the subject's forearm flexor muscle group. Electrodes are placed at approximately the same locations from day to day, and small variations in signal level are corrected by gain adjustments. The myoelectric signals are amplified and then processed using a full-wave rectifier and a first order low-pass filter (time constant of 112 ms). The two processed signals are sampled via an analogue digital converter (ADC) and the control strategies are implemented in software on an IBM-PC/AT microcomputer.

### Myoelectric Control Training

The training configuration of the test system enables the operator to use muscle contractions to position a cursor on a microcomputer screen. The cursor is displayed with a graph which represents the control strategy. It is positioned at the origin of the graph when both controlling muscles are relaxed. Maximal co-contraction will position the cursor at the top right corner of the graph. Thus, appropriate contraction levels of the biceps and triceps muscles can position the cursor in any region of the graph.

### Prosthesis Control Testing

The test system developed allows for ME control of a simulated prosthesis. Simulated prosthesis control is achieved by controlling the motions of a stick figure displayed on a microcomputer graphics screen. The object in controlling the stick figure is to move the display to match the position and size of a wedge-shaped target.

The dynamics of the stick figure motion closely approximate those of the Boston Elbow (BES 100) and the Otto Bock Hand (8E14-7.25 inches). The dynamics of the Boston Elbow plus forearm and Otto Bock hand were obtained from measurements of their step responses.

## TEST PROCEDURE

The test procedure has two phases: myoelectric control training and prosthesis control testing. In the first phase, following a brief introduction to the control strategy and test system, the operators practice using muscle contractions to select the various prosthesis functions. In the second phase, the operators control the motions of the stick figure prosthesis.

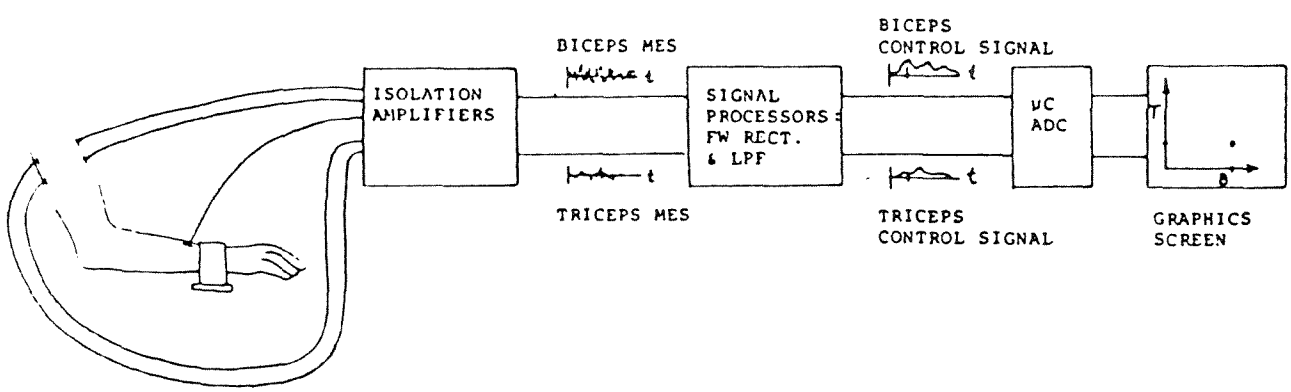


**Figure 5.**
Block diagram of test environment.

**Phase 1: Myoelectric Control Training**

The test procedure requires the subject to complete a single, half-hour session of myoelectric control training. In this training session, the object is to position a cursor (which describes the operating point) in the four active regions of the control strategy's representative graph. Each active region is, in turn, the target region. In the CS1 example shown in **Figure 6**, the target region is region 1. The corresponding prosthesis action (ELBOW DOWN) is listed on the video screen on the right side. The subject must maintain the contraction activity such that the cursor (black circle) remains within the target region for one second. Passage of this time limit requirement is indicated to the subject by the bar graph at the upper right portion of the screen. The moment that the target state is engaged, the bar graph begins to extend downwards toward a stationary rectangular object (shown). When the bar graph reaches this object, one second of continuous state selection has expired. One second of selection was used to simulate the approximate maximum length of time a prosthesis would be operated in one direction.

The test allows a maximum of ten seconds to complete each iteration. If the target state is not selected for one full second within the allowable ten seconds, the test program continues on to the next target state. The target state is repetitively cycled from 1 through 4 for the duration of the session. For each iteration during myoelectric control training, the following data were recorded: 1) time to select target state for one second (including the one second of selection); and, 2) states selected in attempting the task.

**Phase 2: Prosthesis Control Testing**

The second phase of testing requires the subjects to control the motions of the simulated prosthesis (stick figure). The microcomputer display screen for these tests is typified in the example shown in **Figure 7**. The test procedure requires the subject to position the elbow and hand display to match the position and size of a wedge-shaped graphic target on the video screen. The allowable tolerances about the target are $\pm 5$ degrees (elbow) and $\pm 10$ degrees (hand). When a device is moved to

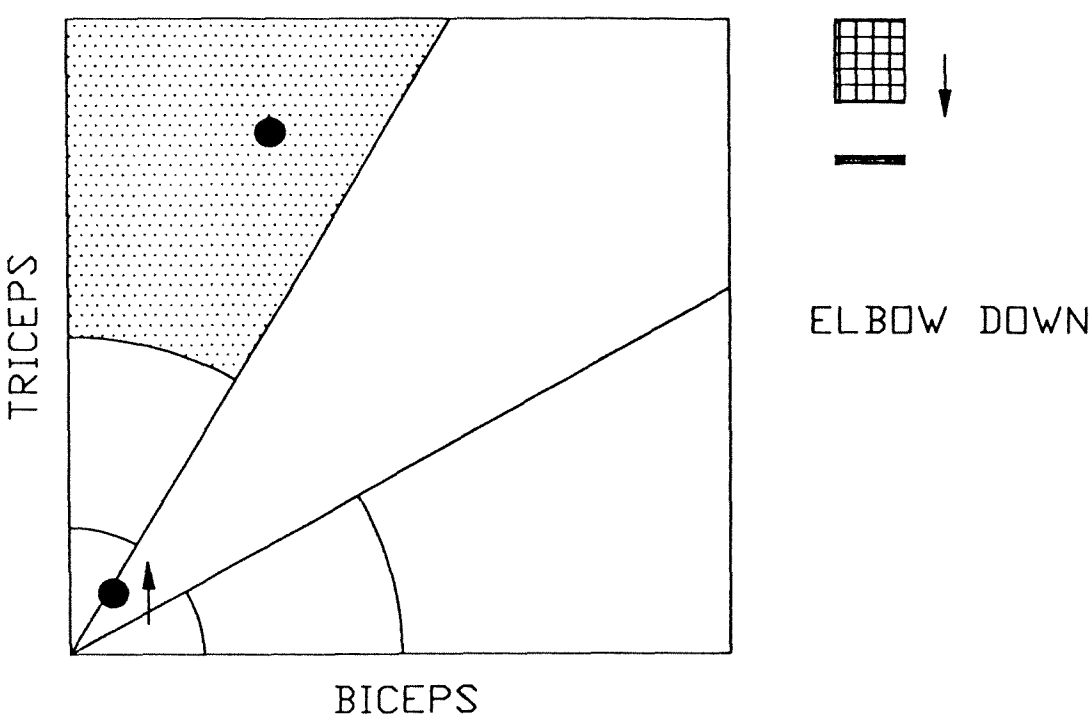


**Figure 6.**
Myoelectric Control Training display.

Journal of Rehabilitation Research and Development Vol 27 No 1 Winter 1990

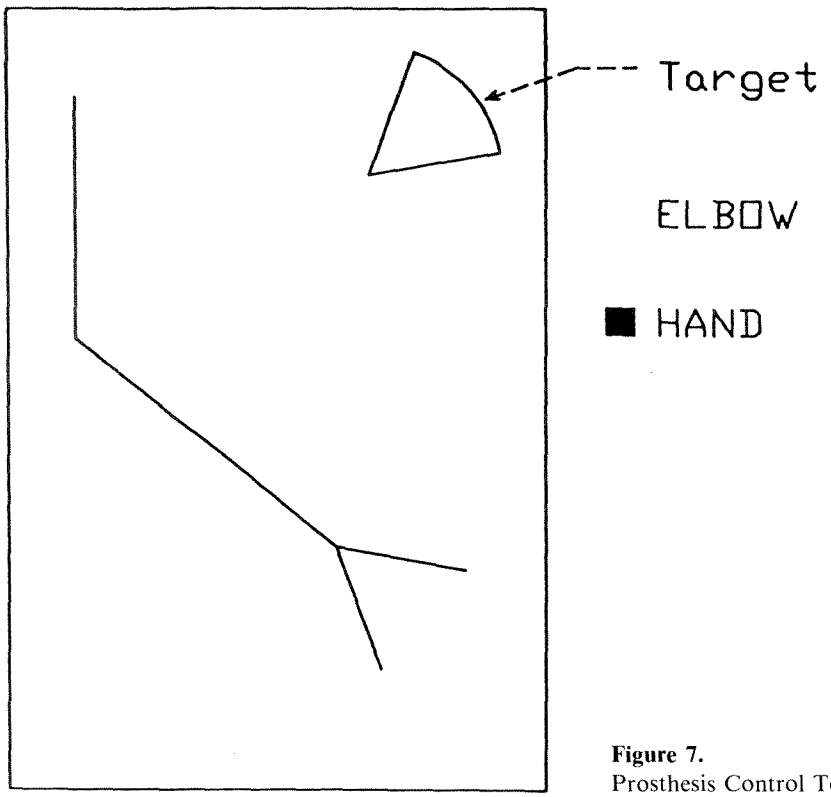


**Figure 7.**
Prosthesis Control Testing display.

within its tolerance region, an indicator is displayed on the video screen.

A maximum of 100 different randomly selected targets are presented to the subject within one half-hour session. In this preliminary study, five sessions were conducted over five successive days (one session per day). The same targets were used for each subject and each session. For each iteration during the Prosthesis Control test, the following data were recorded: 1) total time (TT), until both devices were stopped on-target; 2) residual angular error (RE) at task completion; 3) integral absolute angular error (IAAE) (for each device, this calculation was made while the device was off-target. The absolute value of the angular error at each sampling instant was integrated from the time of the test start, to the time of the test completion); and, 4) states selected en route to completion of the test.

## DATA ANALYSIS

The data collected from each test phase were analyzed to investigate differences in the groups' performance characteristics. For all data analyses, the data from the three subjects in each group were pooled together. This yielded information about a control strategy group in comparison to the other control strategy groups.

For Phase 1 testing, there is a single ensemble of data for each group. For Phase 2 testing, there are two ensembles of data for each group. The two ensembles for Phase 2 arise from separating the collected data into two test periods. The two test periods are the first three days (TP1), and the last two days (TP2) of prosthesis control testing (i.e., Phase 2). This data separation allows a single measure of improvement from test period 1 (TP1) to test period 2 (TP2).

As noted previously, the object of the experiment was two-fold: 1) an evaluation of the test system developed to determine if operators could successfully control a simulated prosthesis using the control strategies implemented; and, 2) a cursory investigation into the efficacy of four different control strategies by determining the relative performance capabilities of unbiased operators.

**Myoelectric Control Training data analysis**

Each of the four groups' data ensembles of the selection times for the single training session was tested for normality, and it was shown that the data distributions were significantly non-Gaussian. Comparisons of group data ensemble median values were conducted, and the statistical significance of noted differences were tested using a non-parametric Wilcoxian Rank-Sum test (W-test).

The results of ME Control Training are summarized in **Table 1**. The numbers are the median values of the data ensembles identified. The selection time scores include the one second of continuous state selection required to complete the task. For example, for group 2 (using CS2), the median time to select state 3 was 1.86 seconds. The asterisks indicate pairs in a state column which are not significantly different at the 1 percent level.

Other group scores of interest are the mean number of errant state selections per trial for each target state, and the rate of occurrence of test failure for each target state. These are presented in **Tables 2 and 3**, respectively.

**Prosthesis Control Testing data analysis**

Each of the four groups' data from the five prosthesis control testing sessions was divided into two ensembles: the first three days' results (TP1) and the last two days' results (TP2). This undoubtedly obscured some of the information associated with learning curves, i.e., the rate of change in performance abilities over time. However, the purpose of this data grouping was to obtain a single measure of improvement from the initial to the final control abilities.

The results of the prosthesis control testing phase are summarized in the tables below. All data ensembles except those for residual error (RE) were found to be significantly non-Gaussian. T-tests conducted on the residual error ensembles showed that there were no significant differences in the four groups' accuracy in positioning the devices. Non-parametric statistical testing was conducted on the total time (TT) and integral error (IE) data ensembles to determine the significance of differences in median values. **Table 4** shows the groups' median values of the total time (TT) for test periods 1 and 2 (TP1, TP2). Included in this table is a calculation of the percentage change from TP1 to TP2. **Table 5** shows the groups' integral errors (IEs) for TP1 and TP2, and the percentage change from TP1 to TP2.

The numbers in **Table 6** indicate the group number (CS, or control strategy, number) and the sequence indicates the numerical order of the median values (lowest on left). These differences were shown to be statistically significant using the W-test. Bracketed group numbers indicate that the median value for the group listed on the left was nominally lower than that of the other group, but this was not shown to be a significant difference.

## CONCLUSIONS

The test system works well and provides a basis for training operators and for objective evaluation of control performance. The test procedure allowed a cursory investigation into comparative operator

**Table 2.**
Mean number of errant state selections per trial.

| | State | | | |
|---|---|---|---|---|
| **Group** | **1** | **2** | **3** | **4** |
| 1 | 0.46 | 0.35 | 0.14 | 0.23 |
| 2 | 0.36 | 0.67 | 1.20 | 1.10 |
| 3 | 0.37 | 0.48 | 1.00 | 1.00 |
| 4 | 0.074 | 0.11 | 0.88 | 1.30 |

**Table 1.**
Median selection times (seconds).

| | State | | | |
|---|---|---|---|---|
| **Group** | **1** | **2** | **3** | **4** |
| 1 | 1.50* | 1.59* | 1.55 | 1.78* |
| 2 | 1.23 | 1.45* | 1.86* | 1.78* |
| 3 | 1.50* | 1.58* | 2.50* | 2.50 |
| 4 | 1.38 | 1.62 | 3.50 | 3.90 |

**Table 3.**
Rate of occurrence of test failure (percent).

| | State | | | |
|---|---|---|---|---|
| **Group** | **1** | **2** | **3** | **4** |
| 1 | 0.00 | 0.00 | 0.00 | 0.01 |
| 2 | 0.050 | 0.27 | 0.12 | 0.020 |
| 3 | 0.13 | 0.025 | 0.017 | 0.0083 |
| 4 | 0.10 | 0.033 | 0.37 | 0.44 |

**Table 4.**
Total time medians: TP1, TP2, and percent change.

| | Total time median (seconds) | | |
|---|---|---|---|
| **Group** | **TP1** | **TP2** | **% Change** |
| 1 | 10.1 | 8.6 | −14.9 |
| 2 | 14.3 | 10.45 | −26.9 |
| 3 | 8.1 | 7.0 | −13.6 |
| 4 | 11.05 | 8.0 | −27.6 |

performances. Thus, some insight was gained in the comparative effectiveness of different control strategies. A discussion of the performance of the operators in each CS group follows.

## Prosthesis Control Testing

Each of the subjects was able to comprehend the details of the control strategy and the test requirements. All subjects were able to adequately control the operations of the simulated prosthesis display. All four control strategies were deemed feasible methods of ME control of a multifunction prosthetic arm. The data are preliminary and with the small sample size, it is not possible to make definitive statements about the relative performance of the strategies. However, it is noted that in terms of total task time and integrated error measures, (**Table 6**), CS3 shows particular promise.

## Observations on Control Strategies

*Control Strategy 1.* Group 1 used a control strategy implementing a three-state myoelectric control system for each of the controlling muscles. While this implementation is easy to comprehend, it does not facilitate sequential operations as well as CS3; it is easier to change from state to state using CS3 than CS1.

**Table 6.**
Prosthesis control performance rankings.

| Parameter | TP1 | TP2 |
|---|---|---|
| Total time | 3,1,4,2 | 3,4,1,2 |
| IAAE (Elbow) | (1,3),4,2 | 1,3,(4,2) |
| IAAE (Hand) | 3,1,4,2 | 3,1,4,2 |

*Control Strategy 2.* Group 2 operators exhibited the greatest difficulty in hand control. However, the following must be said of this group's abilities. The performance improvement gradient is one of the greatest amongst the four groups. Therefore, it is possible that their performance capabilities would continue to approach those of the groups showing better initial performance.

*Control Strategy 3.* Control strategy 3 is ranked first in terms of total task time and integral error measures (**Table 6**). Sequential operation of the different prosthesis functions appeared to be quite easy for this group. It is noted that sequential operations are likely the most common use of a multifunction prosthesis. For example, reaching for an object and moving it to another location would require four different prosthesis operations, each of which is engaged by its own unique contraction pattern. The operators could produce the required contraction activity patterns adroitly, distinguish them from one another, and develop reasonable control of the prosthesis.

*Control Strategy 4.* The results for this control strategy demonstrate that it is a reasonable strategy for control of a multifunction prosthesis. Such a co-contraction switching system provides adequate ability to perform sequential prosthesis functions. A possible improvement is to shorten the relaxation time required to switch the active device from the

**Table 5.**
Median integral absolute angular errors.

| | Integral absolute angular errors (radian*seconds) | | | | | |
|---|---|---|---|---|---|---|
| | Elbow | | | Hand | | |
| **Group** | **TP1** | **TP2** | **% Change** | **TP1** | **TP2** | **% Change** |
| 1 | 1.60 | 1.38 | −13.5 | 5.72 | 4.56 | −20.3 |
| 2 | 2.73 | 1.72 | −37.0 | 7.37 | 5.47 | −25.8 |
| 3 | 1.66 | 1.47 | −11.4 | 4.33 | 3.74 | −13.6 |
| 4 | 2.15 | 1.61 | −25.1 | 6.85 | 4.76 | −30.5 |

hand back to the elbow. This would improve the ability to operate the prosthesis functions sequentially. The concept utilized in this control strategy holds great promise for multifunction prosthesis control in 5, 7, or 9 state systems. The co-contraction switching could be encoded at various levels (as in CS2) to switch the active device between 2, 3, or 4 devices.

## RECOMMENDATIONS FOR FUTURE WORK

A suggested improvement is to program the computer to analyze operator performance automatically during testing. Then, after a certain number of tests, the computer could provide some motivating feedback representing operator performance. Furthermore, an automated comparative analysis of subject versus group ensemble performances would be beneficial in a clinical environment. Computer-controlled optimization of control strategy parameters on the basis of current and past control performance might improve operator control ability.

Microprocessor implementation of myoelectric signal processing should be developed in order to minimize the circuitry required in utilizing different control strategies. Varying the system parameters would be easier using a microprocessor-based system. If the same code is executed in an external microcomputer using the same control signals, then the subject could train using a display similar to the one used in this study.

Replacing the stick figure display with actual prosthetics hardware while retaining the computer control of targets and computation of performance should be considered as a means of eliminating errors caused by inability to model system nonlinearities accurately. For those with an amputation who will eventually use such systems, hardware rather than computer graphics simulation probably would be more meaningful.

## REFERENCES

1. **Almstrom C, Herberts P:** Clinical applications of a multifunctional hand prosthesis. *Proceedings of the 5th International Symposium on External Control of Human Extremities,* 455-467, Yugoslav Committee for Electronics and Automation, Dubrovnik, Yugoslavia, 1975.
2. **Balasubramanian R, Scott RN:** Pattern recognition techniques for multifunction prosthesis control. *Proceedings of the 8th International Federation of Automatic Control Congress,* 171-176, Kyoko, Japan, 1981.
3. **Berube JL, Parker PA, Gander RE, Dunfield VA:** Digital myoelectric signal processor with adaptive decision boundaries. *Med Biol Eng Comput* 22(4):349-352, 1984.
4. **Dorcas DS, Scott RN:** A three-state myoelectric control. *Med Biol Eng Comput* 4(4):367-370, 1966.
5. **Dunfield VA, Shwedyk E:** Digital EMG processor. *Med Biol Eng Comput* 16(6):745-751, 1978.
6. **Fleisher SM, Shwedyk E:** Sequential multistate EMG signal processor. *IEEE Trans Biomed Eng* BME-26(10):549-556, 1978.
7. **Graupe D, Beex AAM, Monlux WJ, Magnussen I:** A multifunctional prosthesis control system based on time series identification of EMG signals using microprocessors. *Bull Prosthet Res* 10(27)4-16, 1977.
8. **Graupe D, Cline WK:** Functional separation of EMG signals via ARMA identification methods for prosthesis control purposes. *IEEE Trans Syst Man Cybern* SMC-5(2):252-259, 1975.
9. **Graupe D, Magnussen J, Beex AA:** A microprocessor system for multifunctional control of upper-limb prostheses via myoelectric signal identification. *IEEE Trans Autom Control* 23(4):538-544, 1978.
10. **Graupe D, Salahi J, Kohn KH:** Multifunctional prosthesis and orthosis control via microcomputer identification of temporal pattern differences in single-site myoelectric signals. *J Biomed Eng* 4(1):17-22, 1982.
11. **Graupe D, Salahi J, Zhang D:** Stochastic analysis of myoelectric temporal signatures for multifunctional single-site activation of prostheses and orthoses. *J Biomed Eng* 7(1):18-29, 1985.
12. **Herberts P, Almstrom C, Kadefors R, Lawrence PD:** Hand prosthesis control via myoelectric patterns. *Acta Ortho Scand* 44:389-409, 1973.
13. **Jacobsen SC, Knutti DF, Johnson RT, Sears HH** Development of the Utah artificial arm. *IEEE Trans Biomed Eng* 29(4):249-267, 1982.
14. **Jerard RB, Jacobsen SC:** Laboratory evaluation of a unified theory for simultaneous multiple axis artificial arm control. *J Biomech Eng* 102(3):199-207, 1980.
15. **Jerard RB, Williams TW, Ohlenbusch CW:** Practical design of an EMG controlled above elbow prosthesis. *Proceedings of the Conference on Engineering Devices in Rehabilitation* Boston, MA, 73-77, 1974.
16. **Lyman J, Freedy A, Solomonow M:** Studies toward a practical computer-aided arm prosthesis system. *Bull Prosthet Res* 10(22):213-225, 1975.
17. **Paciga JE, Richard PD, Scott RN:** Error rate in five-state myoelectric control systems. *Bull Prosthet Res* 18:287-290, 1980.
18. **Paciga JE, Scott RN (Eds.):** Clinical evaluation of UNB 3-state myoelectric control. *UNB Bioengineering Institute Progress Report No. 16*, 3, Sept 1978.
19. **Parker PA, Stuller JA, Scott RN:** Signal processing for the multistate myoelectric channel. *Proc IEEE* 65(5):662-674, 1977.
20. **Philipson L:** Adaptable myoelectric prosthetics control

with functional visual feedback using microprocessor techniques. *Med Biol Eng Comput* 23(1):8-14, 1985.

21. **Philipson L:** Digital approaches to myoelectric state control of prostheses. *Bull Prosthet Res* 18(2):3-11, 1981.
22. **Philipson L, Sorbye R:** Myoelectric elbow and hand prosthesis controlled by two muscles only, in a 9-year old girl. *Prosthet Orthot Int* 5:29-32, 1981.
23. **Philipson L, Sorbye R:** Control accuracy and response time in multiple-state myoelectric control of upper-limb prostheses: Initial results in non-disabled volunteers. *Med Biol Eng Comput* 25(3)289-293, 1987.
24. **Richard PD, Gander RE, Parker PA, Scott RN:** Multistate myoelectric control: The feasibility of 5-state control. *J Rehabil Res Dev* 20(1):84-86, 1983.
25. **Scott RN, Paciga JE, Parker PA:** Operator error in multistate myoelectric control systems. *Med Biol Eng Comput* 16(3):296-301, 1978.
26. **Wirta R, Taylor D, Finley F:** Pattern-recognition arm prosthesis: A historical perspective - a final report. *Bull Prosthet Res* 10(30):8-35, 1978.
27. **Yamada M, Niwa N, Uchiyama A:** Evaluation of a multifunctional hand prosthesis system using EMG controlled animation. *IEEE Trans Biomed Eng* 30(11):759-763, 1983.