Department of Veterans Affairs

Journal of Rehabilitation Research and Development Vol. 28 No. 4, 1991
Pages 39–46

A Technical Note

An interactive computer graphics system for the design of molded and orthopedic shoe lasts

David F. McAllister, PhD; Donald Carver, MS; Ravinder Devarajan, MS; Lou Harrison, MS; Jerry L. Pietenpol, PhD; Sz-hung Yang, MS
Department of Computer Science and N.C. State Computer Systems Laboratory, North Carolina State University, Raleigh, NC 27695-8206

Abstract—The Department of Computer Science at North Carolina State University, with support from the Department of Veterans Affairs and National Aeronautics and Space Administration (NASA) Langley Research Center, has developed an interactive graphics program for the development of shoe lasts from digitized images of feet or digitized images of commercial shoe lasts. The program runs on a Sun 3/260 computer with a TAAC-1 graphics accelerator. The program contains operations for region addition and deletion, techniques for narrowing the ankle area, methods for toe extension, operations to allow for shoe inserts, etc. Once the operations by the user are complete, the program will resample the resulting last in a 512×512 array. The user is then allowed to select an error tolerance which will guide a data reduction program to represent the last as Coons patches. These patches are then transmitted to a milling machine which will cut the last.

Key words: *computer-aided design/computer-aided manufacturing (CAD/CAM), foot disorders, orthopedic footwear, TAAC-1 graphics accelerator.*

INTRODUCTION

Foot disorders can be precipitated by trauma or may be the result of a systemic disease such as arthritis, diabetes, and circulatory disorders. There are also congenital deformities such as clubfoot. Though foot disorders can at best be managed by shoe modifications, the correction and alleviation of these foot disorders is possible only with the help of custom-designed footwear. Improper footwear can result in further deterioration, and may lead to amputation of the foot. Construction of these custom products is rapidly becoming a dying art. The dearth of skilled shoemakers has resulted in an increase in both the costs and the production times of custom-made shoes. For this and other reasons, there have been several efforts to automate various parts of the shoe manufacturing process (2,10,14).

One of the first commercial systems to combine three-dimensional (3-D) digitizing, computer graphics, and computer-aided manufacturing techniques to the design of shoe lasts was developed by LIC in Sweden.* Their system is driven by an IBM AT and represents a foot image using a low resolution wire frame approximation. The system is now being marketed in Europe. A more recent system which uses faster and more powerful workstations as graphics devices is being marketed by Gerber Systems Technology, Inc. (8). The system includes capabilities for creating 3-D lasts, 3-D styles, pattern engineering, tooling for stitch pallet, perforation dies and injection molding, and output to numerically controlled machines.

In 1987, several researchers at North Carolina State University, under the support of the Department of Veterans Affairs and the Technology Transfer Division of NASA Langley Space Flight Center, began the development of a computer-aided design/computer-aided manufacturing

Address all correspondence and requests for reprints to: David F. McAllister, Professor, Department of Computer Science, College of Engineering, North Carolina State University, Box 8206, Raleigh, NC 27695-8206.

This work was supported by National Aeronautics and Space Administration Grant NAG-1-096.

*Personal communication with Anders Norberg, LIC, Sweden, March, 1987.

DOI: 10.1682/JRRD.1991.10.0039

Journal of Rehabilitation Research and Development Vol. 28 No. 4 Fall 1991

(CAD/CAM) system for the production of custom-molded and orthopedic footwear. The system consists of a digital scanner with 1 mm accuracy which produces a 512×512 point 3-D model of a patient's foot or a commercial shoe last, and a computer graphics system which permits interactive manipulation of the foot or commercial shoe last to produce a custom-molded shoe or an orthopedic shoe last which will then pass to a numerically controlled milling step to cut the shoe last and the sole. The system also contains the necessary database and validation components.

HARDWARE

The graphics system is implemented in the C programming language on a Sun 3/260 computer with a TAAC-1 graphics accelerator. The TAAC-1 is a CISC processor with considerable parallelism which enables rapid rendering of a surface representation of the foot. The data is collected in slices perpendicular to an axis which runs from the toe section to the heel of the patient's foot. These 3-D points are converted to the standard triangular mesh of polygons and rendered using the internal z-buffer and Gouraud (smooth) shading of the TAAC-1. While the rendering speed of the TAAC-1 (5 M 24-bit polygons per sec) does not permit real time rotation of a smooth shaded image of 2^{19} triangles, the foot can be positioned in real time by rendering only the vertices of the polygons. Indeed, the user can work in any of three renderings: points, polygons with hidden lines removed (which will normally contain too much information to be useful), or a Gouraud-shaded image. Examples of the three are illustrated in **Figure 1**.

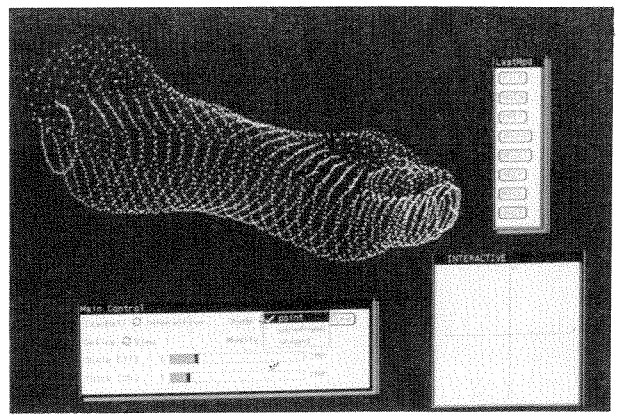

Figure 1a.
Point image.

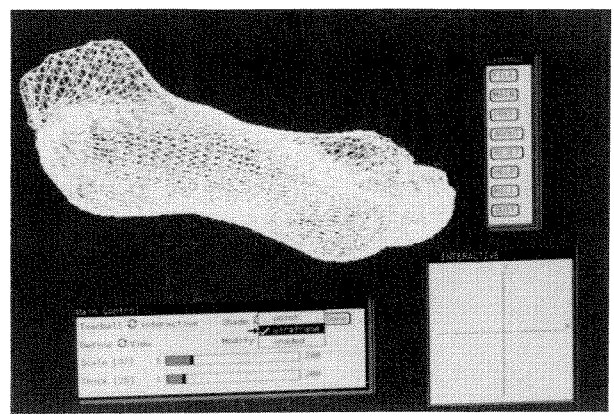

Figure 1b.
Wireframe image.

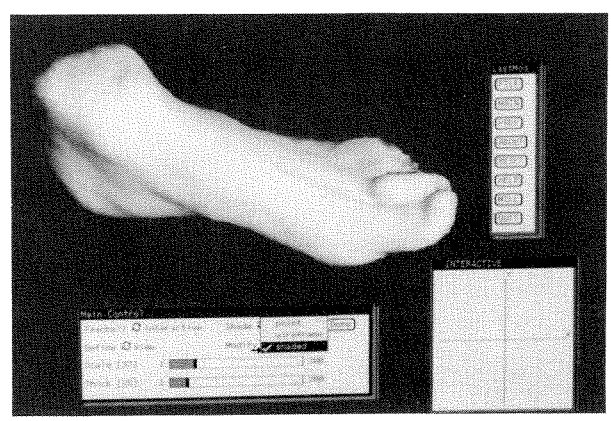

Figure 1c.
Gouraud-shaded image.

GRAPHICS SYSTEM USER INTERFACE

The system has been designed to include menus, dialog boxes, sliders, and other standard windowing devices. The windowing capability is provided by the SunView software program since the TAAC-1 does not have a direct windowing capability. There has been no assumption made that the user is computer-literate, and the interface is designed to enable custom shoe manufacturers to speed up their construction process while reducing costs.

There are several generic operations on the foot which are available to convert the model to a custom-molded shoe or an orthopedic shoe last. If we are developing a custom-molded shoe we begin with a digitized image of the patient's foot. In this case, operations include narrowing the ankle area and manipulation of the toe area to allow

for splay of a loaded foot. If we begin with a commercial shoe last, then removal or addition of material (to allow for an insert, relieve pressure on tumors and sores, accommodate amputations, etc.) are other operations which are necessary. We have adopted a data format which makes the search for point regions and modification simple.

The data is stored internally as an array of point coordinates (x,y,z) and an array of nodal incidences (i,j,k) of triangles. The data, which is originally collected as radial distances (longitudes) on slices (latitudes) perpendicular to an axis along the length of the foot, is converted to a polygonal representation. The polygons (i.e., triangles) are formed on the surface of a cylinder with n longitudes and m latitudes, as shown in **Figure 2**.

LastMod is the name of the computer-aided design graphics package. Upon starting *LastMod*, the *LastMod* Panel (as shown in **Figure 3**), appears on the graphics display. This panel has seven buttons. The buttons and their uses function as described below:

File opens the File panel, which is used for loading and storing foot models. The user can scan through patient files, load and save foot/last images, and get information on the current operation.

Main opens the Main control panel, which contains all the last manipulation operations, and opens the graphics window.

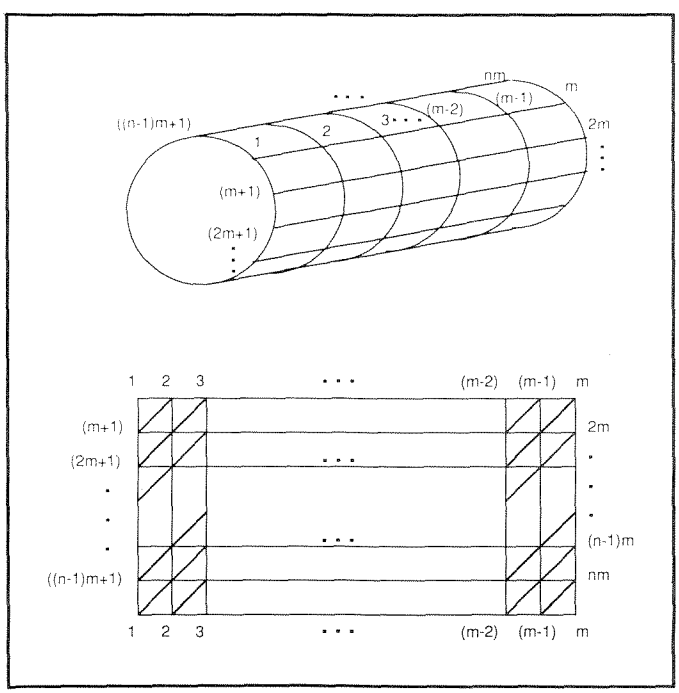

Figure 2.
Cylindrical mapping of sample points.

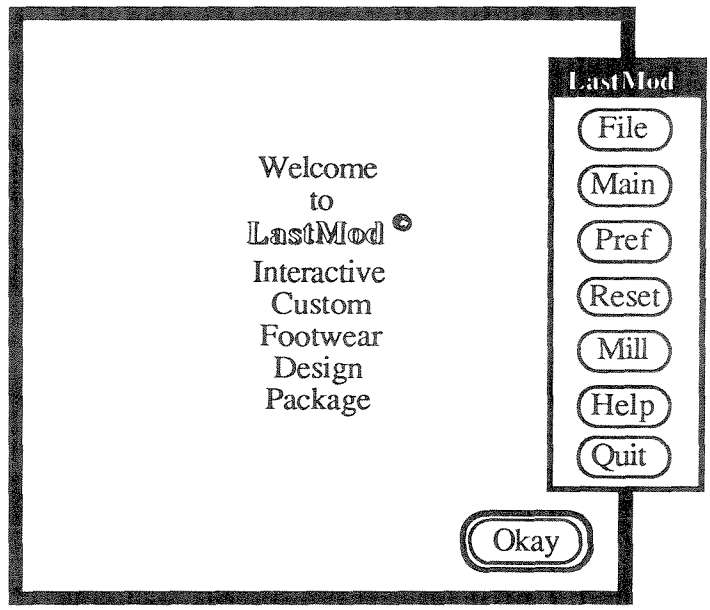

Figure 3.
The LastMod panel.

Pref opens the Preferences panel, which is used to customize the graphics display to suit individual taste. The user can change background color, foot image color, and the direction of a single light source for Gouraud shading.

Reset resets all control parameters to their default values.

Mill resamples the foot to maintain required tolerance and then perform a data reduction using the minimum number of Coons patches to represent the foot. This data is then passed to the milling process, and the foot is milled from wax or plaster. The resulting last is then used to construct a shoe.

Help opens a window that provides on-line information about the features of the *LastMod* system.

Quit allows the use to exit from the *LastMod* software package.

MODIFICATION OPERATIONS

Traditionally in creating molded shoes the operator used a plaster cast of the foot or, in the case of orthopedic shoes, the shoemaker begins with a commercial shoe last which was then modified by deleting or adding material. The plaster cast of the foot is taken under unloaded or semi-loaded conditions (i.e., the foot had little or no weight placed on it). Because of anatomical differences in individuals, it is common for a foot to change its shape drastically once weight is placed on it. In the past, it was the respon-

Journal of Rehabilitation Research and Development Vol. 28 No. 4 Fall 1991

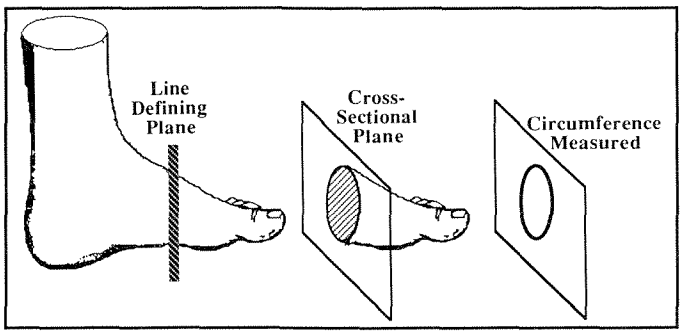

Figure 4.
Measuring cross-sectional surfaces.

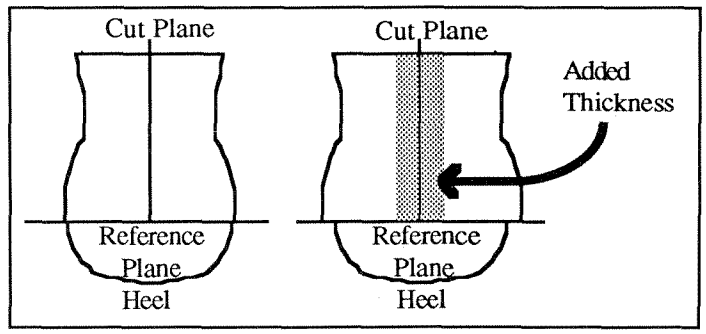

Figure 6.
Using Reference and Cut planes to add thickness.

sibility of the shoemaker to anticipate these changes by noting such things as the flaccidity of the foot and other properties, and to modify the cast or commercial shoe last accordingly. We observed several custom-shoe manufacturers and designed a system which incorporates most of the common operations. In addition to the common graphics operations of zoom, pan, rotate, and translate, the operator can use predefined views of the image such as *Back, Front, Top, Bottom,* etc. The system also has a measuring capability which allows the operator to measure straight line distances on the foot and cross-sectional circumferences (see **Figure 4**).

Adding and deleting material from the foot model are the most important operations used in creating a shoe last. There are several operations which have been implemented to enable this capability.

To remove or add large planar sections from the foot, a cut-plane can be defined which marks the center of the region to be deleted or augmented. A slider, which is a graphics input device appearing in a window of the screen, is used to control the thickness; material is then added or deleted parallel to the cut-plane. Such an operation is useful in adding material to the foot to allow for a shoe insert, for example. If the operator wishes to control the depth of the cut, a reference plane can be first defined which limits the region that will be modified as defined by the cut-plane. Since one rarely modifies the plantar surface except for the toe region, narrowing the ankle area can be easily accomplished by first defining a reference plane parallel to the bottom of the foot above the toes, and then defining a cut-plane perpendicular to the reference plane passing through the ankle area and removing material accordingly. Examples of these planes and procedures are shown in **Figure 5, Figure 6,** and **Figure 7**.

To provide routines that emulate the methods of last-makers, the LastMod package also supports the build-up of a region on the foot. We noted, by observation, that last-makers routinely use "almost oval" shapes, and our best approximation to this is the use of a convex region. This choice also affords some larger measure of robustness, since the default centroid will be contained within the region; in this case the region will grow "up" and not sideways. Ensuring smoothness of the build-up would be a non-trivial task without the restriction to convex regions.

Arbitrary convex polygonal regions can be marked on the foot. The system will then show the centroid of the

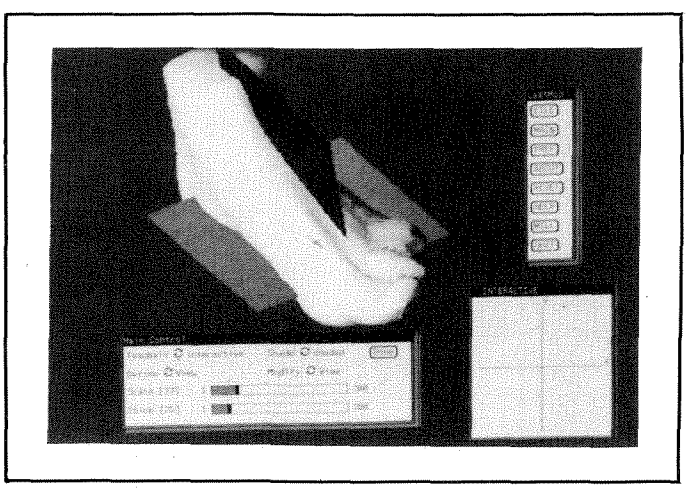

Figure 5.
Screen representation of defined Cut and Reference planes.

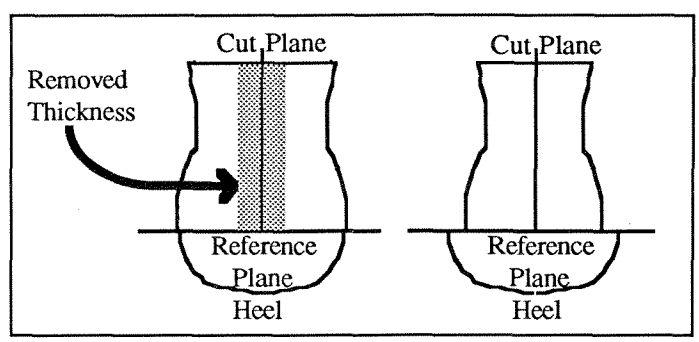

Figure 7.
Using Reference and Cut planes to remove thickness.

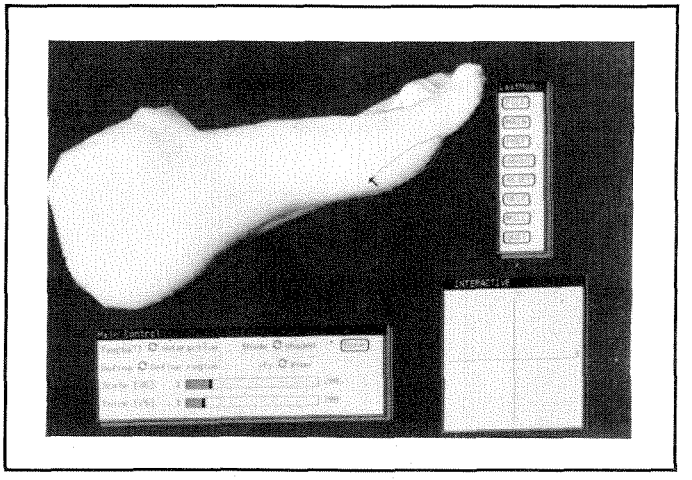

Figure 8.
Defining a convex region.

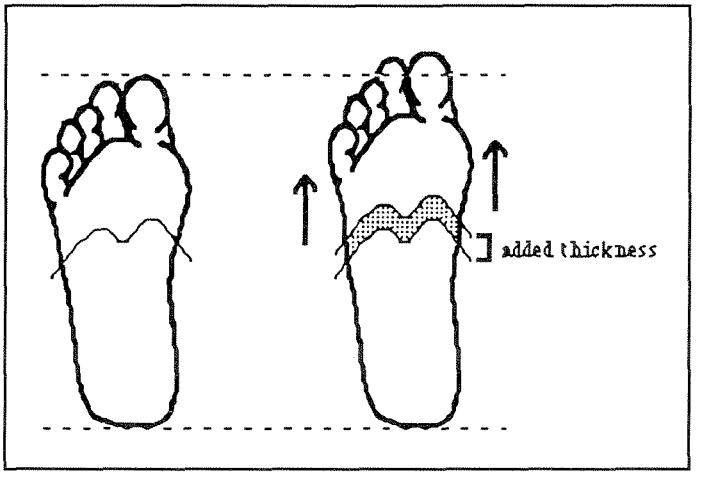

Figure 10.
User-defined linear spline (*left*) and result of added thickness (*right*).

region, which can be interactively changed. Material is added or deleted with maximum thickness defined at the centroid. The region is divided into triangles with the centroid as a common vertex, and then interpolating Hermite (3) surfaces are defined over each triangle to produce a continuous "bump." The boundary of the region will be smooth as shown in **Figure 8** and **Figure 9**.

Often the toe region must be modified to allow for splay under loaded conditions. Custom-molded shoe manufacturers normally cut a plaster cast along the joints where the metatarsals meet the proximal phalanges, and then add material to extend the toes. This cutting operation is simulated by allowing the operator to define a linear spline along the cut path. Material is then added uniformly according to a user-defined thickness. This operation is shown in **Figure 10**.

Finally, the tips of the toes are also extended. This is implemented by allowing the operator to use the *Region Define* command (see **Figure 8**) and define a direction in which the toe region is to be stretched. This operation is shown in **Figure 11**.

Details of the user interface can be found in the *LastMod User's Manual,* and programming details are

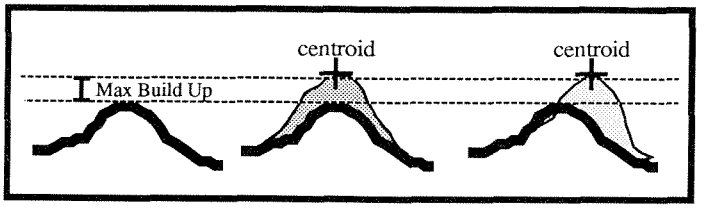

Figure 9.
Partial cross-section of sore region with various centroid definitions for the maximum build-up of the region.

described in the *LastMod Programmer's Reference Manual.* Pietenpol provides descriptions of the algorithms (9).

DATA REDUCTION

After the manipulations by *LastMod*, the points and polygons representing the foot will no longer contain the regularity described previously. In order to get regularly spaced data for the Coons patch representation (1,4,5), we must resample to regain the regularity required by APT (a numerical control program) for the milling process. New data will be bilinearly interpolated from the old. After resampling, and finding the associated slope and twist vectors at each point, we have a Coons patch representation of the last. However, this representation will contain on the order of 512×512 patches, and hence reduction in the amount of data is required to minimize milling time. We use a subdivision method similar to one proposed by Schmitt, Barsky, and Du (12) for Bernstein-Bézier surfaces; the details of this method are described by Harrison (7).

The Coons patch data can be thought of as a collection of "unit" Coons patches, and the objective is to place as many unit Coons patches as possible into one larger patch. The unit patch array is divided into a predetermined number of patches by choosing corner vertices more than one unit away from each other. The next step is to check each internal vertex for its distance from the larger patch covering it. A mapping is established between the larger patch and the corners of all the unit patches it envelops. Each of these corner points is compared with a corresponding point on the larger patch, and the maximum distance is found. If this maximum distance is greater than the speci-

Journal of Rehabilitation Research and Development Vol. 28 No. 4 Fall 1991

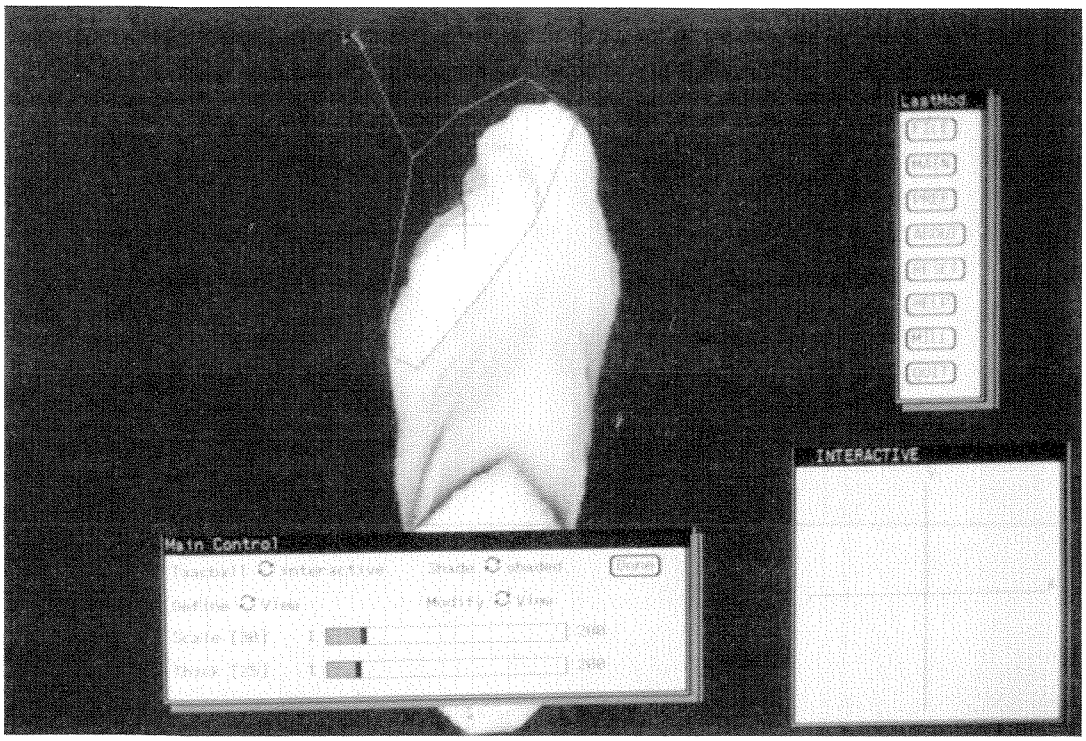

Figure 11a.
Stretching a region along a vector, before.

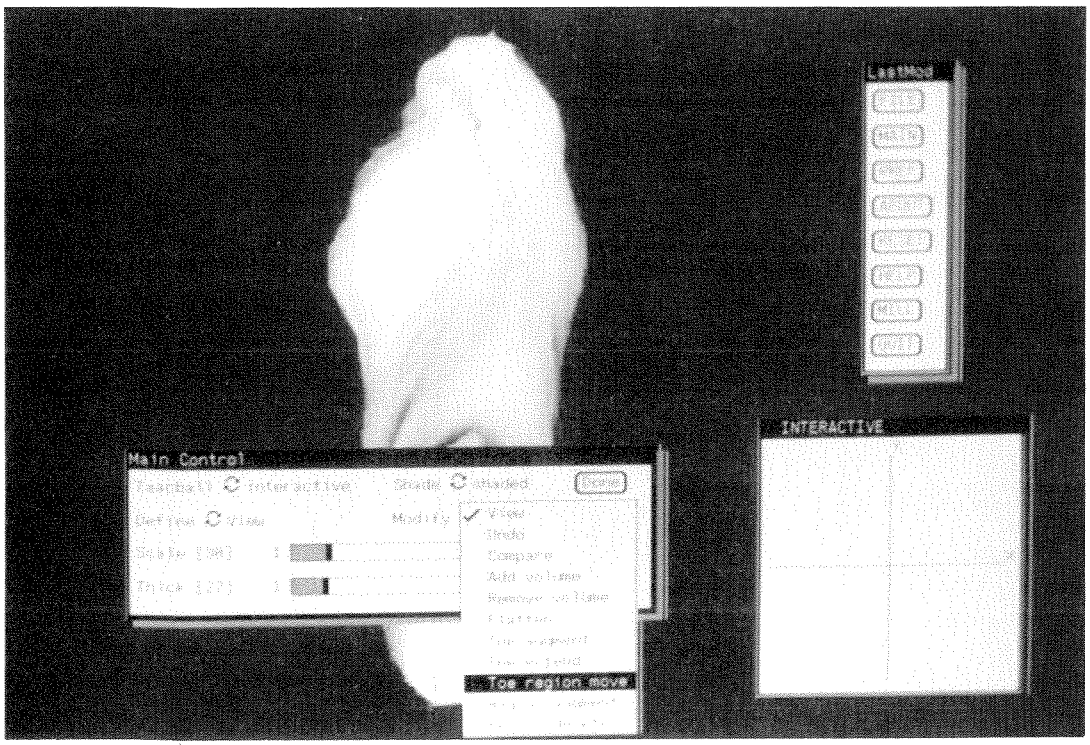

Figure 11b.
Stretching a region along a vector, after.

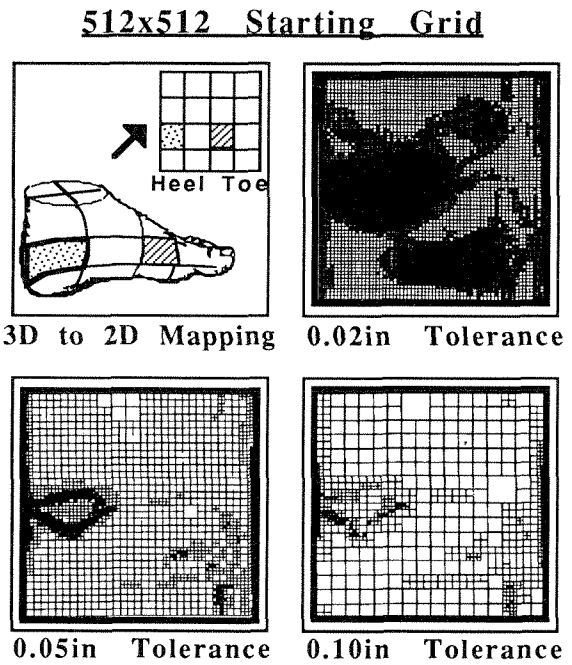

Figure 12.
Patch densities for various tolerances.

fied tolerance level, this patch must be subdivided into four smaller patches.

All subdivision occurs at the midpoint of the patch. Subdivision is continued on each of the larger patches until all fall within specified tolerance levels when compared to the unit patches. A 2-D map of the relative patch sizes of the final reduced last definition is suggested by **Figure 12**.

Results of initial testing with various resolutions are shown in **Table 1**. With this particular data file, we were able to achieve better than 75 percent reduction for most cases. This reduction will reduce the storage requirements considerably and make the milling process much more efficient.

Table 1.
Subdivision reduction per resolution and tolerance.

Resolution	Tolerance	Max Patches	Sub Patches	% Reduction
256x256	0.02 in	65536	53725	18
256x256	0.05 in	65536	8749	87
256x256	0.10 in	65536	2110	97
512x512	0.02 in	262144	59872	78
512x512	0.05 in	262144	7741	97
512x512	0.10 in	262144	1501	99

SYSTEM EVALUATION

We tested the system by digitizing plaster casts of a VA patient's feet. Arnie Davis of Davis Shoe Therapeutics, Inc. (San Francisco, CA), used the system to produce shoe lasts which were milled and redigitized to test the accuracy of the system.

A videotape was made which demonstrates some of the salient features of the graphics system. There was also a user's manual. After watching the tape and reading the user's manual, only a half-day training period was necessary for Davis to use the system effectively. There were several suggestions made by Davis to improve the system. The two most significant suggestions were the ability to allow the shoemaker to form a toe box around a modified foot image, and the ability to compare the final last with the original foot (memory limitations of the TAAC precluded more than one foot image on the screen at any one time). Other suggested modifications included the ability to: 1) hide cut planes; 2) make the cut and reference planes more visible from the side; 3) remove a wedge of material; and, 4) modify built-up regions without having to redefine the boundary of the selected region.

The system permits rapid digitization and development of shoe lasts. The data reduction step runs in the background and, because of the file sizes involved, can require considerable swap time unless sufficient memory is available. We estimate that an experienced last designer could produce a last ready to mill in less than 15 minutes. The current bottleneck in the system is the time required to mill a last. Because of antiquated equipment and the required 1 mm accuracy, this process currently takes hours. Faster milling equipment and higher tolerances could conceivably reduce this time to under 10 minutes. We expect that with improvements in hardware and some software modification, redesign of the system could produce a custom last every 30 minutes.

SUMMARY AND CONCLUSIONS

We have described a CAD system for the interactive modification of foot or commercial shoe last images to produce a last for making orthopedic footwear. We anticipate that the system will interface to a commercial pattern design and cutting program in the future. The system will enable custom shoe manufacturers to collect data on common operations which might be performed automatically. The VA has contracted the development of the 3-D scanner (Cyberware Inc., Monterey, CA). The 3M Company has

developed a plastic sock which molds to the foot and can be sent through the mail to a central site where a scanner is located. Scanned images can then be transferred by tape cartridge to the shoemaker for manipulation on a graphics workstation. Graphics workstations powerful enough to allow interactive manipulation of a foot image or a predigitized shoe last can be purchased for less than $20,000, and the costs continue to decrease. The milling machine can be very expensive but this process can also be done at a central site. Hence, the shoemaker need only purchase the graphics workstation.

We hope that at some time in the future it will be economically feasible for the general public to wear custom shoes.

REFERENCES

1. **Coons SA:** Surfaces for computer-aided design of space forms. *Technical Report TR-41, Project MAC.* Cambridge: Massachusetts Institute of Technology, 1967.
2. **Duncan JP, Dean DP, Pate GC:** Moire contourography and computer-aided replication of human anatomy. *Eng Med* 9(1):29-36, 1980.
3. **Farin G:** *Curves and Surfaces for Computer-aided Geometric Design,* 75-79. Boston: Academic Press, 1990.
4. **Foley JD, Wallace VL:** The art of natural graphic man-machine conversation. In *Proceedings of the IEEE,* 62(4): 462-471, 1974.
5. **Forrest AR:** On Coons and other methods for the representation of curved surfaces. *Comput Graphics Image Process* 1(4):341-359, 1972.
6. **Fuchs H, Kedem ZM, Uselton SP:** Optimal surface reconstruction from planar contours. *Commun ACM* 20(10):693-702, 1977.
7. **Harrison L:** Bridging a User Interface to Specific Hardware for an Interactive Orthopedic Footwear Package. Master's thesis, North Carolina State University, 1990.
8. **Kincman D:** Partnership with the future. *Am Shoemaking* 363(11):25-26, 1989.
9. **Pietenpol JL:** Computer Graphics System for the Interactive Design of Shoe Lasts. Master's thesis, North Carolina State University, 1989.
10. **Rasdorf WJ, Lakmazaheri S, Boose LK, Wallace RJ:** Architecture of an integrated CAD/CAM system for the design and manufacturing of custom orthopedic footwear. In *Managing Engineering Data: Emerging Issues,* 35-42, 1988.
11. **Rogers DF, Adams JA:** *Mathematical Elements for Computer Graphics,* 157-187. New York: McGraw-Hill Book Company, 1976.
12. **Schmitt FJM, Barsky B, Du W:** An adaptive subdivision method for surface-fitting from sampled data. *Comput Graphics* 20(4):179-188, 1986.
13. **Shneiderman B:** Direct manipulation: A step beyond programming languages. *Computer* 16(8):57-69, 1983.
14. **Smith PJ, Darvill AN:** Shoe design and manufacture by computer. In *Proceedings of the 6th Annual Conference on Design Engineering,* 195-205, 1983.