Department of Veterans Affairs

Journal of Rehabilitation Research and Development Vol. 32 No. 1, February 1995
Pages 1–16

Design of a controlled-energy-dissipation orthosis (CEDO) for functional suppression of intention tremors

Michael J. Rosen, PhD; Allison S. Arnold, MS; Ivan J. Baiges, MS; Mindy L. Aisen, MD; Sheila R. Eglowstein, BS
Eric P. and Evelyn E. Newman Laboratory for Biomechanics and Human Rehabilitation, Massachusetts Institute of Technology, Cambridge, MA 02139

Abstract—Conventional neurological practice is generally not successful in restoring independent upper extremity function to people with disabling tremors. The authors have been investigating an orthotic approach, the application of energy-dissipating loads to affected limbs, to allow voluntary intent to be expressed while attenuating tremor. CEDO 1 is a prototype Controlled-Energy-Dissipation Orthosis, which permits the 3 degrees of freedom (dof) needed for table-top activities. It mounts to the user's chair or table and applies velocity-proportional resistance to his/her forearm by means of computer-controlled magnetic particle brakes. The design incorporates a stiff linkage transmission to the elbow brake of the orthosis, allowing it to be fixed in the frame of reference. This eliminates its inertia from the moving linkage and provides virtually direct drive in all 3 dof. Initial experimental results show selective clinically significant tremor reduction during experimental tracking tasks.

Key words: *assistive technology, motor control, orthotics, rehabilitation engineering, tremor.*

INTRODUCTION

Tremor as a Clinical Problem

Pathological tremor is an involuntary rhythmic oscillation of the limbs, head, or trunk which affects an estimated one million Americans today (1). In its mildest form, pathological tremor impedes activities of daily living (ADL) and hinders social function. In more severe cases, however, tremor occurs with sufficient amplitude to obscure all underlying voluntary activity. For the large fraction (65 to 70 percent) of tremor-disabled individuals who have tremor in their shoulders, elbows, wrists, or hands, independent function is difficult or impossible (2).

The work described in this paper is directed specifically toward the management of action or "intention" tremor. This type of movement disorder is elicited or aggravated when the limb is involved in a voluntary motor task distinct from postural maintenance (3–6) and is commonly associated with damage to the spino-cerebellar and mid-brain centers that interact to coordinate purposeful movements (1,2). Head injury, multiple sclerosis (MS), Friedreich's ataxia, Joseph's disease, and some strokes and tumors can cause intention tremor. It may also arise from neurological degeneration caused by chronic alcohol intoxication or metabolic poisoning (3).

The most effective treatment available today for tremor-disabled individuals is medication used on a trial-and-error basis (3,6). Because clinicians cannot reliably predict an individual's response to a particular drug, it is standard procedure for clinicians to prescribe, in the order of decreasing expected effectiveness, the drugs known to reduce tremor. When a drug fails to provide relief, the dosage is altered or the next drug on the list is prescribed. Even when a drug does reduce tremor, its benefits must outweigh its undesirable side effects and potential for addiction before it is prescribed on a long-term basis (7). Common side effects of tremor medications include sedation, weight gain, nausea, diarrhea, rash, impotence, and depression (2).

Address all correspondence and requests for reprints to: Michael J. Rosen, PhD, Department of Biomedical Engineering, University of Tennessee, 899 Madison Avenue, Memphis, TN 38163.

This work was supported in part by the Burke Rehabilitation Center, White Plains NY; the NIDRR via the Harvard-MIT Rehabilitation Engineering Center; the National Science Foundation; and the MIT Undergraduate Research Opportunities Program.

Application of Mechanical Loading to Tremor Management

The difficulties with drug treatment of tremors have motivated the authors' work on functional limb loading. Rosen et al. have shown experimentally that people with abnormal intention tremor are disabled not because they lack useful levels of volitional control or adequate muscular strength, but because the magnitudes of their superimposed pathological oscillations approach the magnitudes of their purposeful actions (8–10). This suggests that if a loading orthosis could be designed to selectively suppress tremor while allowing voluntary movement, it would enable individuals with tremor to perform some daily tasks independently.

Encouraged by one-degree-of-freedom (dof) wrist tremor experiments in which viscous loads did selectively attenuate intention tremor (8,11) and by the theoretical rationale for tremor-suppression orthoses outlined below, Rosen et al. have more recently begun a program of designing and building active and passive devices capable of measuring tremor in multiple dof while simulating a variety of loads including inertia, elasticity, damping, rigid walls, force perturbations, and combinations of the above (10–18). All of these systems can be viewed as emulators or prototypes of tremor-suppression orthoses and assistive interfaces, and one of them—the CEDO 1 (Controlled-Energy-Dissipation Orthosis)—is the focus of this paper. CEDO 1 is a prototype 3-dof restraint system meant to enable tremor-disabled individuals to undertake a particular set of daily activities independently (12). In this paper, the design and initial human-subject testing of CEDO 1 is described and important design goals for tremor-suppression orthoses are discussed.

Theoretical Arguments for a Tremor-Suppression Orthosis

Three broad classes of hypothesized mechanisms are considered by most investigators as likely to play a role in generating or influencing the properties of normal physiological and pathological tremors to varying degrees:

1. biomechanical resonances, in which the limb oscillates at a tremor frequency related to its lumped passive mechanical properties and is forced by muscle noise that originates in a background of random motor unit firing or by cardioballistic oscillations (19–26);
2. reflex loop instabilities, in which neuromuscular transmission delays and/or increased gains reduce the phase margin of both segmental and transcortical reflex arcs, causing oscillation (27–30);
3. central nervous system (CNS) oscillators, in which autonomous sources in the CNS drive the affected muscle groups to produce oscillatory forces at fixed frequencies and amplitudes regardless of peripheral factors (13,31–35).

It may be shown qualitatively that achieving selective reduction in tremor (relative to voluntary movement) by means of viscous damping is a reasonable expectation for any of these three hypotheses. If a tremor is caused by biomechanical resonance, the addition of a parallel damper to the anatomical inertia and elasticity driven by the muscles will increase the damping ratio of the system and will thereby diminish the amplitude of its resonant peak. If a tremor is driven by an oscillatory reference signal from the CNS, then the damper to ground (the proximal limb segment) presents a 1/s load to the force measured at the limb and effectively attenuates the tremor relative to slower purposeful movement frequencies by 20 dB per decade of frequency difference. Finally, if an autonomous reflex oscillation is responsible for tremor, the "physical plant" driven by the closed-loop neural system is a series element in that loop. If damping alters the dynamics of that plant appropriately, it could reduce the tendency to oscillate.

Evidence from Experimental and Clinical Loading Devices

Many investigators have modified normal physiological tremor by altering mechanical conditions at the distal end of the tremorous limb. However, most of these studies have been directed specifically toward defining the tremorogenic mechanisms of physiological tremor (20–22,24,32). Very few studies have focused on pathological tremors (13,35–37), and the majority of these have been devoted to identifying mechanisms of pathological tremor, not to determining the effectiveness of loading as a basis for assistive technology.

The authors know of just two published studies other than their own in which damping loads were applied to the limbs of tremor-disabled persons specifically for the purpose of tremor management. Morrice et al. (38) applied mass loads, spring loads, and damping loads across the wrists of subjects with cerebellar ataxia in 1987 and discovered that the damping loads consistently improved subjects' accuracy in 1-dof tracking tasks. Sanes et al. (39) applied constant force loads, mass loads, and damping loads to the wrists of subjects with postural and action

tremors in 1988 and reported that the damping loads reduced subjects' tremors dramatically.

With regard to existing orthoses, the concept of using fixed-base orthotics to modify the performance of the human arm is not new. *Active* multi-dof experimental orthotics—such as the Case Western Reserve University "Arm Aid," a 5-dof exoskeletal robot meant to manipulate a paralyzed human arm (40); the Rancho Los Amigos Hospital "Electric Arm," a similar device which was actually developed into a commercial product (41,42); a remotely driven electric arm orthosis developed at the New York University Institute of Rehabilitation Medicine (43); the so-called man-amplifiers reviewed by Kazerooni (44); and teleoperators, robotic devices whose motion is controlled by an operator at a distance (45,46)—received considerable attention 2 to 3 decades ago. However, these systems were uniformly too complex in design, too demanding of the user, and cosmetically too obtrusive to be successful as orthotic devices for tremor-disabled users in daily activities. In contrast, the commercially available Mobile Arm Support, or "Ball Bearing Feeder" (47), is commonly used today to provide low-friction arm support for people with deltoid muscle paresis or paralysis. With regard to tremor management, Michaelis Engineering of Southampton, England has more recently developed and is commercially marketing two viscous-loading assistive devices—a feeding aid for tremor-disabled individuals called the "Neater Eater" and a computer mouse Tremor-Reducing Apparatus called the "MouseTRAp" (48). At the time the CEDO project was begun, however, the task remained to incorporate damping into a general-use orthosis that would meet realistic product-design goals.

METHODS

Design Goals for Tremor-Suppression Orthoses

The goals and constraints which determined the configuration and main features of CEDO 1 include:

- tremor reduction and selectivity of tremor reduction
- safety
- compatibility with anatomy and function
- comfort and ease of use
- economy

Other goals which, because of insufficient research or market information, were not used as a basis for designing CEDO 1, but which are expected to influence the success of tremor-suppression orthoses in the future include:

- minimization of fatigue
- minimization of long-term decrease in effectiveness
- minimization of negative after-effects of use
- reliability
- cosmesis

Goals which drove the CEDO 1 design features are discussed below as part of the description of those features. Goals which relate instead to user-device system performance are discussed in the context of the results from the initial subject testing.

Features of CEDO 1

Device Summary

CEDO 1, pictured in **Figure 1**, is a 3-dof computer-controlled energy-dissipating orthosis. It generates resistive loads by means of magnetic particle brakes whose torques are transmitted to the forearm of the user via a stiff low-inertia linkage. CEDO 1 was designed as a prototype assistive device for persons disabled by tremor, meant to

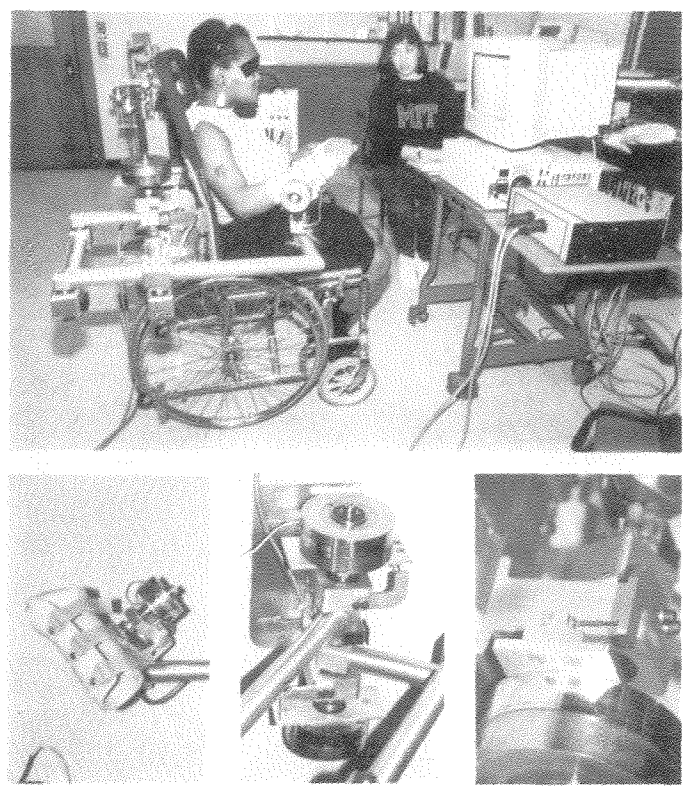

Figure 1.
a) CEDO 1, mounted on a standard wheelchair, undergoing experimental evaluation; b) wrist cuff and magnetic particle brake for distal limb tilt; c) magnetic particle brakes for damping in movement plane, mounted on base plate; d) flexure bearing for accommodating small runout of the brake shaft.

be evaluated by its intended users in abstract and functional tasks, and to generate improved designs. In research terms, CEDO 1 was built to validate the working hypothesis that velocity-dependent resistive loads can suppress intention tremor in more than one dof without unacceptably attenuating voluntary movement.

The main components of the CEDO 1 system are shown schematically in **Figure 2.** The forearm of the user is secured to the device via a rigid plastic cuff and Velcro straps. Potentiometers mounted at the three orthosis axes measure the forearm position, and differentiator circuits housed in an electronics box determine its velocity. These analog position and velocity signals are converted to digital signals via an analog-to-digital (A/D) converter, and the digital signals, in turn, are fed to a computer. To make CEDO 1 behave as a damper at the attachment to the user's arm, a computer program reads the position and velocity information and calculates the brake torques needed to generate a resistive force proportional to the user's velocity. Finally, the computer's digital torque commands are converted to analog signals via a digital-to-analog (D/A) converter, and the analog signals control the brake-driver circuits to activate the brakes.

Kinematic Configuration

Design of a tremor-suppression orthosis to accommodate unlimited function of the upper extremity would impose several classes of constraints on the device. These include:

1. Kinematics. The limb coupling of the orthosis must be able to attain any position and orientation of which the limb is capable via any trajectory.
2. Anatomical compatibility. The structure of the orthosis must not occupy volume intersecting with the space filled by the user's limb or other body segments.
3. Absence of singularities. The position and orientation of the limb coupler must uniquely determine the values of all other kinematic state variables of the orthosis.
4. Dynamics. The resistance imposed on the user's limb by the orthosis during the performance of functional movements must not exceed the sustained force and torque capabilities of the user.
5. Accuracy. The designed-in and incidental loading characteristics (e.g., inertia and Coulomb friction) of the orthosis must not unacceptably degrade the positioning accuracy of the user's limb.
6. Task environment compatibility. The mechanism of the orthosis must not interfere with objects with which the user interacts when undertaking personal, vocational, educational, or recreational tasks.

In the CEDO project, a decision was made to loosen these constraints by pursuing a more limited geometry and a smaller set of functional tasks. Our goal was to significantly reduce tremor in the performance of desktop and tabletop tasks; that is, in the interaction with objects in a horizontal volume of space over a surface: (i.e., "desk," reading, and eating) activities similar to those with which a standard mobile arm support is meant to be compatible. Thus, CEDO 1 was given the 3 dof shown in **Figure 3.** The first and second dof permit the user to move the midpoint of the forearm in a horizontal plane. The third permits the user to tilt the forearm about a horizontal axis perpendicular to the long axis of the forearm, shown as A-A in the figure. CEDO 1 also allows the user to pivot his/her forearm in the horizontal plane about an axis perpendicular to the forearm but this dof is not damped.

Three kinematic configurations were considered for achieving the horizontal planar motion of the two first dof:

- a Cartesian orthosis: one with two orthogonal prismatic (linear) joints defining x and y axes
- an R-Θ orthosis: one with a fixed-base revolute joint on which a prismatic joint provides a second, linear dof

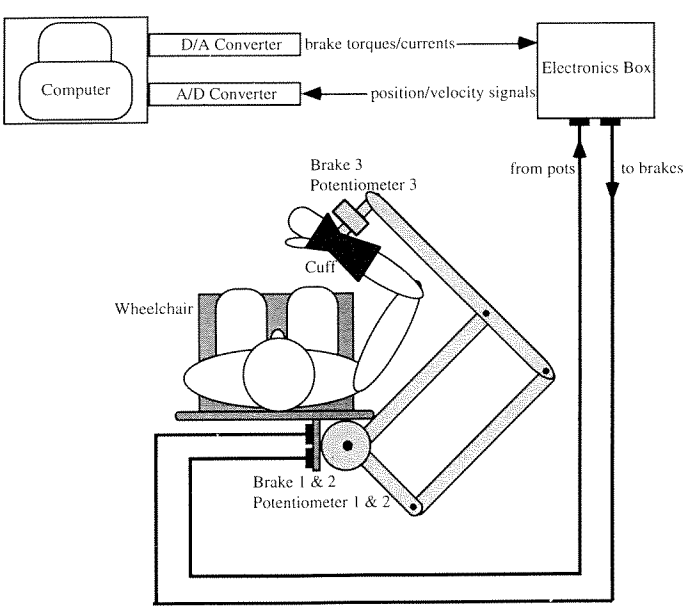

Figure 2.
Schematic of the CEDO 1 system.

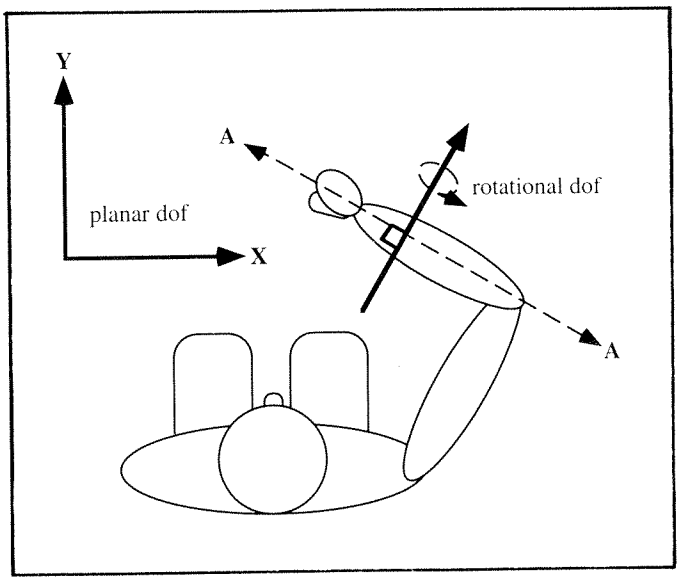

Figure 3.
CEDO 1 degrees of freedom.

- a Φ-Θ orthosis: one which consists of a two-bar open kinematic chain whose state is defined by two angles.

The third (tilt) dof was allocated to a distal revolute joint in all three approaches.

A Φ-Θ configuration was selected for CEDO 1 for several reasons. First, it has the same kinematic structure as the widely used mobile arm support, so its compatibility with a range of tabletop upper limb function has, in effect, been confirmed by naturalistic experiments. Second, the Φ-Θ configuration does not require linear joints. Endpoint stiffness would have been more difficult to achieve when transmitting loads through linear bearings than through revolute joints. Finally, the use of readily available (rotary) magnetic particle brakes to produce damping would have required one or two linear-to-rotary transmissions in the alternative designs and thus would have eliminated the desirable characteristics of direct drive. The CEDO 1 configuration is an "effectively direct-drive" design which avoids many of the problems associated with conventional transmissions such as belts (or cables or metal bands) and pulleys or a gear train. All of these would have introduced backlash, or a "dead zone" within which orthosis endpoint movement unloaded by the brakes would have been possible. Most would also have introduced friction substantially in excess of that contributed by the bearings, adding a finite breakaway force to the load function applied to the limb of the user. The only disadvantage of having used a direct drive system is that no step-up of the brake torques was obtained. This resulted in bigger brakes and/or lower endpoint damping than would have been possible with torque-multiplying transmissions.

Actuator Location

Two variations of the Φ-Θ orthosis are shown in **Figure 4;** both have the same kinematics, but the first configuration requires that the linkage "carry" one brake (defined from this point on as "brake 2"). Given that the various alternative damper technologies all have substantial mass (the selected particle brake weighs 12 lb), the user of an orthosis with the first configuration would feel a considerable endpoint inertia. The altered configuration on the right, chosen for CEDO 1, has brake 2 fixed in the external frame of reference with its shaft coupled to link 1 via a 1:1 linkage transmission consisting of links 4, 3, and the extension of 1. The joints and links of this transmission affect the inertia at the endpoint far less than the moving brake of the first configuration. The shafts of the two brakes are colinear but independent.

Sizing and Materials of Links

The dimensions and geometry of the CEDO 1 linkage are shown in **Figure 5.** Link sizes were based on fabrication of simple mockups to determine the minimum dimensions required for elbow clearance by a large user during tilt movements at various endpoint positions. The link material, 6061-T6 aluminum tube stock, was selected for its economy, availability, ease of fabrication, and low inertia. Wall thickness (0.13 in/0.33 cm) and outer diameter (1.5 in/3.81 cm) were specified to meet stiffness criteria for transmitting damping loads in the horizontal direction

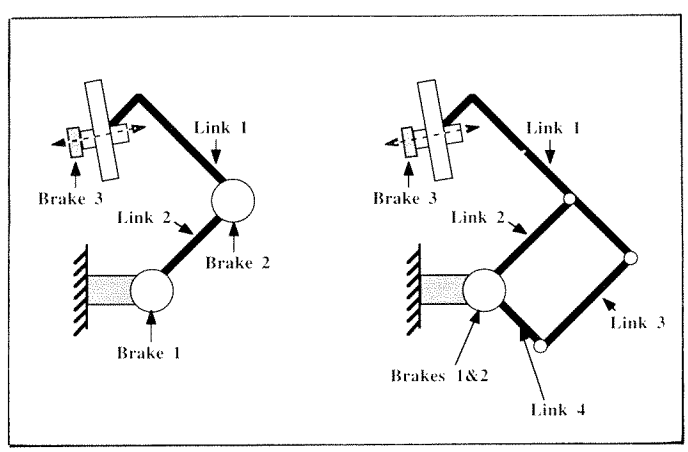

Figure 4.
Actuator relocation for CEDO 1.

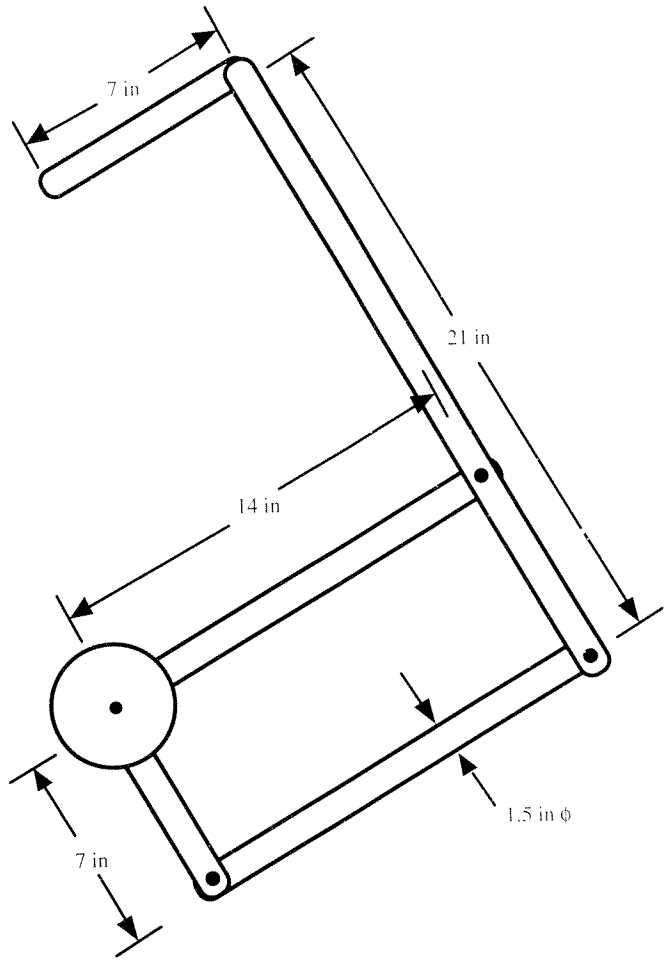

Figure 5.
Dimensions and geometry of the CEDO 1 linkage.

and for imposing rigid restraint in the vertical direction. Selected dimensions include a 50 percent safety factor against yield in any direction under conditions of expected worst case loading.

In the horizontal direction, compliance between the user and brake 2 posed a special concern. Recognizing that the orthosis itself would inevitably interpose inertia and elasticity between the user and the brakes, the orthosis was modeled as a grounded dashpot in series with a spring and a mass. Then, in the context of this model, the stiffness (K) and mass (M) of the orthosis were constrained by two concerns. First, if the damping value were allowed to approach $\sqrt{KM}/2$, the energy dissipation of the orthosis would be comparable to its energy storage and the orthosis could resonate. Given a desired maximum damping value, this problem could be avoided by maximizing stiffness and/or mass. Since it was also desirable to keep the resonant frequency $\sqrt{K/M}$ well above the tremor frequency—and because of concerns regarding muscle fatigue and overall device weight—the logical approach was to maximize stiffness while minimizing mass. The current CEDO 1 design has a measured (at $\Theta = 90°$) horizontal stiffness of 39,300 N/m for linkage 1,3,4; a calculated effective mass of 4.1 kg for the same mechanical system; and a measured (at the endpoint) maximum damping constant of 90 N/(m/s) for brake 2. Since this damping constant is less than $\sqrt{KM}/2 = 200$ N/(m/sec), the system cannot resonate and the dynamics design goal is met.

In the vertical direction, ad hoc experiments and consultation of the anthropometrics literature (49) led to the specification of a worst case downward load of 50 lb (22.7 kg) and a maximum deflection of 0.2 in (0.51 cm). Although the measured stiffness of CEDO 1 actually does not meet this specification—a 40 lbf (18.1 kgf) load produces a deflection of 0.5 in (1.27 cm) with the orthosis in its most extended configuration and 0.3 in (0.76 cm) with $\Theta = 90°$ (links 1 and 2 perpendicular)—it does meet the deflection specification under typical loads applied by tremor-disabled users. The greater-than-expected deflection measured in the vertical direction stems from play and compliance in the bearings and joints not accounted for in the original static stiffness calculations.

Finally, the interface of the links with the revolute joints was designed to avoid stress concentrations. Each bearing block (see **Figure 1**) incorporates a hollow plug with a tapering cross section onto which the tubular link slips. The junctions were machined to a slip fit and filled with Loctite 680.

Actuators and the Force-Velocity Colinearity Issue

Safety was given a very high priority in the design process and consequently only passive torque sources were considered for CEDO 1. This decision was pivotal in constraining other aspects of the CEDO design and performance, most specifically the relationship between kinematic configuration and the colinearity of force and velocity at the endpoint. Although active devices (e.g., DC motors or hydraulic actuators) would permit a broader range of loads to be evaluated, only passive sources cannot under any circumstances move the user's limb. Redundant safety features could certainly be built into an active torque system like the Adelstein manipulandum (14), but limit-setting functions add expense, are not perfectly reliable, and do not eliminate the (valid) perception that the system could fail unsafely.

Magnetic particle brakes were selected for the CEDO 1 actuators for the above safety reasons and because:

1. Unlike mechanical dampers, they are readily computer-controlled.
2. They are much less expensive than hydraulic actuators and their required valves.
3. They lack the undesirable series-compliance of pneumatics.
4. They require less maintenance than brakes which use friction surfaces in contact.
5. They are characterized by higher power-to-weight ratios than DC motors or hydraulic actuators, important in a system with direct drive.
6. They are a familiar technology with which the authors' laboratory has considerable experience (8,13).

The two large brakes at axes 1 and 2 (Placid Industries, Inc. model B150P-06) have a maximum voltage of 6 volts, a maximum current of 1.8 amps, a rated power of 11 watts, an electrical resistance of 3 ohms, a de-energized drag of 30 oz-in (2.16 kg-cm), an unforced response time (i.e., without speedup circuitry) of 130 ms, and a maximum output torque (60 percent greater than its continuous torque rating) of 250 lbf-in (288.0 kgf-cm). The small brake at axis 3 (Placid Industries, Inc., Lake Placid, NY, model B15P-24) has a maximum voltage of 24 volts, a maximum current of 250 mA, a rated power of 6 watts, an electrical resistance of 105 ohms, a de-energized drag of 5 oz-in (360 g-cm) an unforced response time of 25 ms, and a maximum output torque of 35 lbf-in (40.3 kgf-cm).

As mentioned above, force-velocity colinearity—the ability to generate a resistive force vector along the line of action of the velocity vector—is a desirable property for a tremor-suppression orthosis. Because of the disadvantages associated with alternative kinematics and the high priority given to safety, the current CEDO 1 design was pursued despite the fact that it is *not* characterized by colinearity for all endpoint locations and directions of movement. The absence of colinearity in this prototype should allow, through experiments currently underway, determination of the extent to which non-colinearity is acceptable. A geometric demonstration of the non-colinearity properties of CEDO 1 follows.

In **Figure 6,** an idealized sketch of CEDO 1 is presented with Θ at an indeterminate angle greater than 90°. Throughout this analysis and **Figures 6** and **7,** the line between the base joint and the endpoint is always drawn parallel to the long axis of the page. This is meant to emphasize that the base angle (Φ)—the rotational position of the whole orthosis—is irrelevant; it simply rotates the sectors of colinearity and non-colinearity derived here.

In **Figure 6a,** the sign of Θ-dot was chosen arbitrarily as positive (orthosis elbow flexing) and the sign of Φ-dot was chosen as negative (proximal link rotating clockwise). The purely resistive torques T_Θ and T_Φ generated by the brakes at the joints act in directions *opposite* to Θ-dot and Φ-dot as shown in the figure. The two velocity vectors, V_Θ and V_Φ, drawn at the CEDO endpoint, represent the local endpoint velocities resulting from pure rotation at one joint or the other. The two force vectors F_Θ and F_Φ represent the forces generated at the endpoint as a result of each of these one-joint rotations and are drawn in the directions in which they impinge on the limb of the user.

The directions of F_Θ and F_Φ bear explanation. F_Θ is aligned with the orthosis axis, the line joining the CEDO endpoint and the base joint. The force generated by a torque at Θ with the Φ brake off *must* be in this direction because

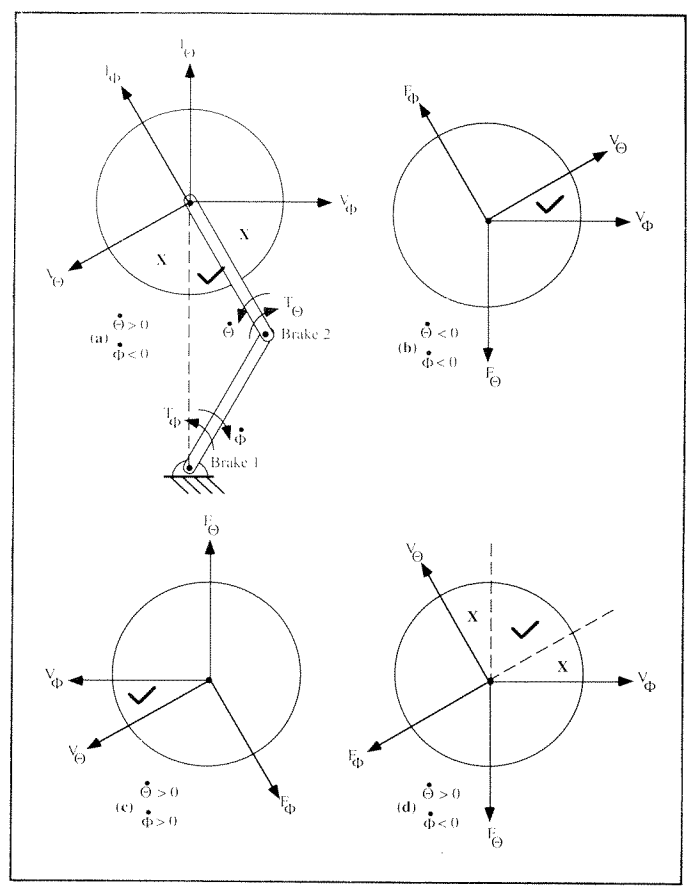

Figure 6.
Force and velocity contributions from the two joints for the four combinations of angular velocity direction.

a component in any other direction would require a moment about the base joint. By the same reasoning, F_Φ must be aligned with the distal link since a component in any other direction would imply the existence of a moment at the elbow joint, a moment which is impossible without torque at the elbow. Note that these arguments are completely general and do not depend in any way on the values of Θ or Φ.

The force the user feels, given the specified rotational directions, must lie within the angular sector defined by the extensions of F_Θ and F_Φ. For given endpoint velocities, its actual direction depends only upon the relationship between the damping constants of the two brakes. The critical observation is that the range of net force directions at the endpoint (in **Figure 6a**) is narrower than the range of possible movement directions which result from the same combination of joint rotations. This implies that whenever the endpoint movement direction falls outside the zone indicated with a check, the resistive force vector cannot be aligned with the endpoint velocity vector.

Parts b, c, and d of **Figure 6** repeat this analysis for the three other combinations of rotation direction. In **Figure 7,** colinearity circles are presented for two extreme cases of CEDO configuration to illustrate the observation that endpoint distance from the base joint has a dramatic effect on the relative sizes of colinear and non-colinear zones.

Flexure-Bearing Brake Mounts

The brake mounts depicted in **Figure 1** are flexure bearings meant to accommodate small runout (deviations from straightness) of the brake shafts. The base joints of links 2 and 4 (the proximal links which couple to the brake shafts) incorporate pairs of tapered roller bearings *in addition to* the bearings in the brakes. This was necessary since the bearings of the brakes were insufficient to transmit the expected radial loads to ground. As a result, however, the brakes could not be rigidly mounted to ground. The short segments of welding rod, shown in **Figures 1c** and **1d,** deflect relatively easily to accommodate the (barely perceptible) wobble of the brakes, while providing much higher stiffness in compression and tension to transmit the brakes' functional reaction torques to ground.

Limb Coupling

The primary issue considered in the limb coupler cuff design was comfort. The cuff-skin contact area had to be large enough to prevent uncomfortable pressure concentrations, yet conforming enough to prevent excessive compliance. Further, the position of the orthosis had to be designed so that the user would not be compelled to accept an uncomfortable position or sustain muscular effort to avoid it.

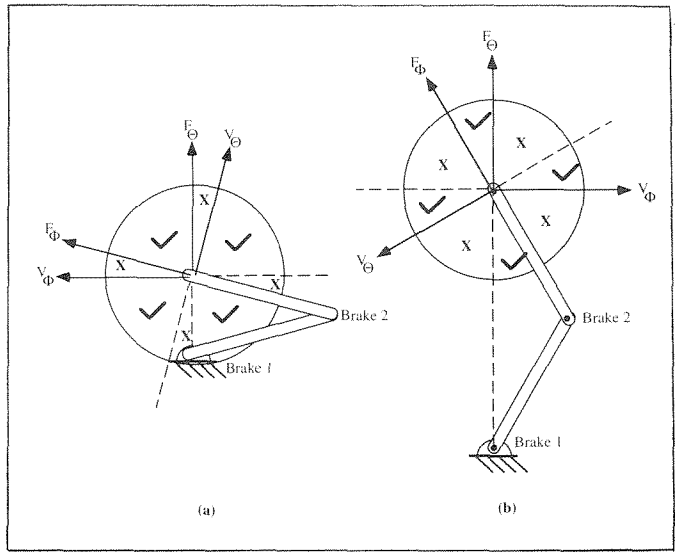

Figure 7.
Non-colinearity diagrams for very extended and very flexed CEDO 1 configurations.

The cuff and dovetail joint pictured in **Figure 1** are used to transmit the resistive loads of the CEDO to the forearm of the user and to prevent wrist flexion/extension and forearm pronation/supination. Three different-sized cuffs, Ali-Med Wrist-Hand Orthosis, Models #5842, 5844, and 5846 (Ali-Med, Inc., Dedham, MA) are available to comfortably accommodate a variety of short-term experimental subjects. The dovetail joint allows the attachment between the cuff and the CEDO 1 linkage to be adjusted easily between a point very close to the wrist and a point more proximal on the forearm of the user. For future tests of functional use, it may be necessary to custom-form a cuff for each user. Using the current design, some subjects in preliminary studies reported (typically after an hour-long testing session) that the cuff felt too tight. It has also become apparent that the point at which the cuff supports the forearm is too distal for some subjects who must maintain shoulder muscle activity, particularly deltoids, to keep their elbows from dropping.

Another concern regarding limb coupler design is the presence of soft tissue: the muscle forces that generate tremor are directly applied to the skeleton, while practical orthotic restraint systems are limited to applying their loads through the skin. In effect, CEDO 1 must transmit damping forces through an anatomical series spring, and as a result,

the thickness and compliance of the soft tissue layers set a lower limit on the amplitude to which tremor can be reduced. While this limit can be minimized by applying external loads through limb sections where the soft tissue layer is relatively thin and stiff (e.g., the dorsal surface of the hand or the bony prominences of the wrist), this approach may conflict with comfort issues. Estimates of the stiffness of the current limb coupler and underlying soft tissue (15) suggest that at the maximum damping loads, CEDO 1 will allow a deviation of 5.5 mm between the distal CEDO joint axis and the user's wrist joint, below which tremor amplitudes cannot be damped.

Circuits and Sensors

The CEDO 1 circuitry and sensors serve two functions. First, to obtain the angular position and angular velocity signals needed for control and data collection, the three joints of the orthosis are instrumented with conductive plastic 1 percent linear potentiometers. The potentiometer outputs are conditioned by analog circuits, and the conditioned signals input to practical operational amplifier differentiators to obtain angular velocity signals. Second, to generate the current to activate the brakes, three brake-driver circuits, essentially voltage-controlled current sources which include lead compensation to account for the response times of the brakes, are used. All DC voltages needed for the CEDO 1 circuitry are provided by a 110-watt switching power supply.

Control Algorithm

CEDO 1's damping action is controlled through software using feedback of joint angles (it has no endpoint force transducer). All software was developed on a Leading Edge model D2 AT-compatible computer configured with an 80287 math coprocessor, an EGA enhanced graphics display adaptor, a Data Translation DT2814 A/D converter, a MetraByte DAS-8 A/D converter, and a MetraByte DDA-06 D/A converter. The MetraByte A/D board has an Intel 8254 programmable interval timer which is used to generate the 60 Hz control cycle signal. A flow chart for the CEDO control algorithm is shown in **Figure 8.**

Step 1 in the control algorithm is to read from files data required to set the endpoint damping to the desired value. In step 2, timer initialization sets clock and counter parameters for the control cycle. In step 3, position signals from the three potentiometers and velocity signals from the analog differentiator circuits are digitized, converted into physical units, and input to the control algorithm. In steps 4 and 5, a model of the CEDO 1 kinematics is employed to calculate endpoint position and endpoint velocity from the measured joint positions and computed joint velocities and to determine the brake torques needed to produce the desired endpoint force. In step 6, the sign of the required power at each joint is checked. Because the CEDO 1 is equipped with energy-dissipating brakes, not motors, it cannot meet a positive power requirement and therefore cannot produce a resistive force vector aligned with endpoint velocity for certain directions and certain CEDO linkage configurations. If positive power is required at a joint, the brake torque at that joint is set to 0. In step 7, the torque-current curves of the brakes (obtained by fitting second-order polynomial equations to torque-current data from the brake manufacturer's specification sheets) are used to determine the brake current needed to generate the joint torques computed in steps 5 and 6. Finally, in step 8, analog signals representing the desired current for each brake are sent via the D/A converter to the brake-driver circuitry. The control algorithm continues until a set num-

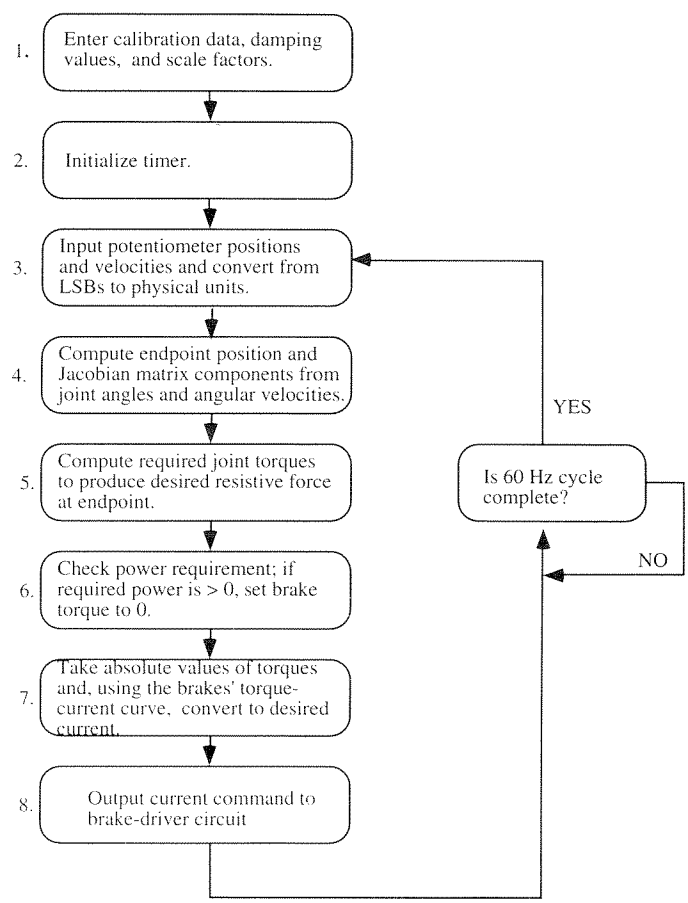

Figure 8.
Schematic of the CEDO 1 control algorithm.

ber of loops have been completed or until the user presses a key on the keyboard to terminate the control program.

RESULTS

Tremor Reduction Effectiveness

The primary goal of CEDO 1 is, of course, to reduce tremor by a functionally significant factor. The standard for complete success is reduction to the amplitude of physiological tremor. For improvements short of this ideal, "How good is good enough?" depends on the activities the user wishes to be able to undertake independently (with orthotic support) and on his/her personal tradeoffs between functional benefit and the various costs of using the CEDO. An individual whose financial independence and personal satisfaction depended, for example, on performing electronic assembly tasks would impose tighter specifications for tremor reduction on the CEDO than someone whose primary need was to turn pages. Further, since the CEDO is meant to be used in functional activities by individuals whose tremors are present during voluntary movement, it must attenuate abnormal movements relative to voluntary movements. This means that an objective evaluation of the effectiveness of the orthosis must also reflect the extent to which the user's actual movements represent his/her intent.

Ongoing experiments with tremor-disabled subjects have demonstrated that viscous loads applied by CEDO 1 can significantly and selectively attenuate upper-limb intention tremor. Preliminary results from an early subject tested by author Baiges are presented below, and a more extensive report is found in Arnold, et al. (50).

Subjects using CEDO 1 were asked to perform pursuit tracking tasks. These tasks served two purposes. First, because they required subjects to perform specific motor acts, the tasks induced the subjects' intention tremors. Second, the tasks permitted the subjects' voluntary movements to be distinguished from their involuntary movements under the assumption that motions linearly related to the target were voluntary and motions not linearly related to the target were involuntary. (Given the frequency separation between the target frequency range and tremor frequencies, harmonics of the target frequencies, if present in the subject's movements, are small relative to noise due to tremor.)

During a tracking task, two markers were shown on a computer screen, a target that moved along a pre-programmed trajectory, and a response that moved as the subject's arm moved. Subjects were asked to move their limb so that the response marker coincided with the target marker as accurately as possible. Targets for the tracking task were generated by summing five sine waves with frequencies below 0.41 Hz (well below the expected 2–4 Hz tremor frequencies) in 2 dof. Movements of the CEDO 1 linkage in the left-right direction corresponded to movements of the response marker in the horizontal or X direction, and movements of the CEDO 1 linkage in the front-back direction corresponded to movements of the response marker in the vertical or Y direction. The mapping between subjects' movements in space and the response cursor's movements on the screen was scaled such that the subjects worked within a 20 cm by 15 cm area. During an experimental session, trials were done at four different levels of damping. Each trial lasted one minute, and each level of damping was repeated three times per session in three different sessions. The order of the trials within each session was random. Subjects were encouraged to practice at the beginning of each test session, to rest between trials as needed, and to ask questions or make comments about CEDO 1 and its damping loads. Target and response trajectories from each trial were sampled at 60 Hz and stored for subsequent data processing.

Results from the tracking experiments are shown in **Figures 9** and **10**. While these data were collected on one 34-year-old woman with severely disabling intention tremor due to chronic progressive MS, the results are representative of the results obtained thus far from other subjects and other etiologies. In **Figure 9**, typical target and response trajectories in the X and Y directions (in units of actual movement) are plotted versus time for each damping level. The tremor amplitude is clearly reduced with the addition of damping, falling from approximately 5 cm peak-to-peak in the undamped trial to less than 1 cm peak-to-peak in the highest damped trial.

In **Figure 10**, data averaged over trials from all three test sessions are shown processed in the frequency domain. Each plot was generated by first computing the auto-and cross-power spectral densities of the target and response trajectories for the X and Y components from each trial using the Welch method of power spectral estimation. Then the coherence function was used to subtract from each response spectrum the component of the response linearly related to the target. Finally, the residual tremor spectra from all trials at a given damping level were averaged. As indicated in the figure, tremor peaks which appear at frequencies near 1 and 2 Hz in the X and Y undamped power spectra are substantially attenuated in the damped power spectra.

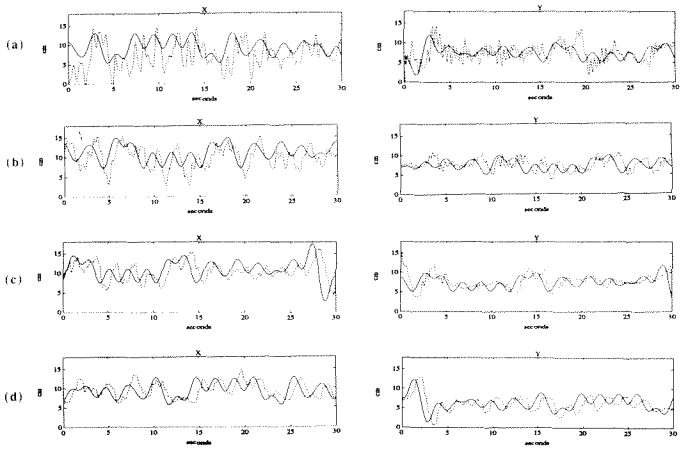

Figure 9.
Target and response time trajectories in the X and Y directions for (a) no damping, (b) low damping, (c) medium damping, and (d) high damping.

A measure of tremor power was also obtained for each trial by computing the area under the tremor power density curve between 0.6 Hz and 3 Hz (the frequencies which bound the subject's tremor band) and averaging tremor power measures for all trials at a given damping level. Compared to the undamped tremor power, the damped tremor power values were reduced by approximately 65, 83, and 85 percent for low, medium, and high levels of damping, respectively.

Finally, the magnitude and phase of the transfer function relating the target and response trajectories, averaged over the target frequencies, were examined to monitor the selectivity of the tremor reduction. These results verified that while the subject's tremor was diminished significantly in the damped trials, the subject's tracking performance was not significantly hindered. In the X direction, the transfer function magnitude remained constant although the subject lagged the target an additional 30° on average in the most damped trials. In the Y direction, the average transfer function magnitude *increased* with the application of damping while the phase remained relatively constant.

User Comments

All subjects tested to date have offered positive remarks on the effect of damping. Typical comments include: "I feel more comfortable with damping"; "My tremor is much worse without damping"; "More damping!"; and "Damping helps me do the tracking task better." In contrast, few of the subjects have been able to envision

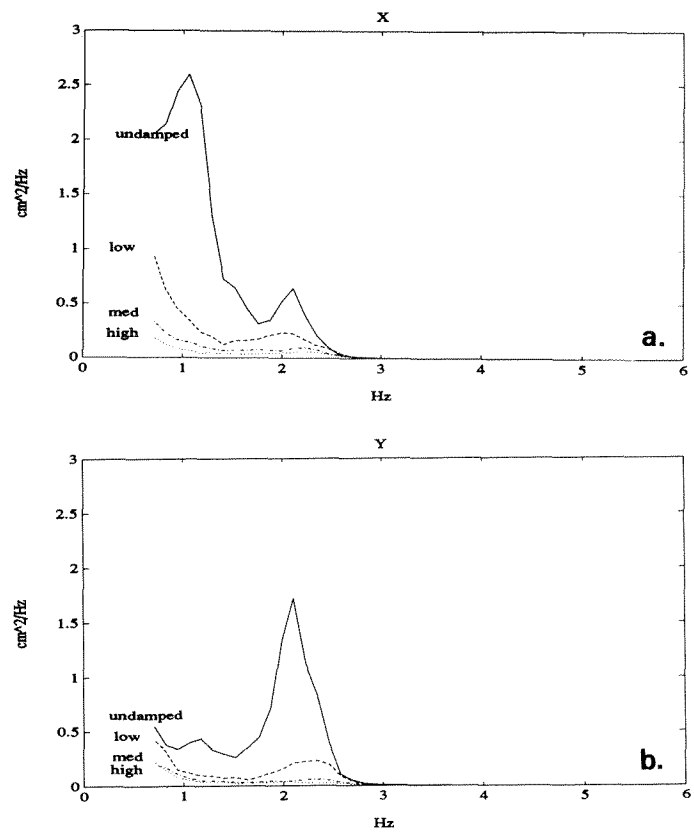

Figure 10.
Averaged tremor power spectra in the X and Y directions for no damping, low damping, medium damping, and high damping.

a commercial orthotic device that would be useful in reducing tremor in a functional setting. The authors believe this reflects the unfamiliarity of the subjects with the notion of mechanical approaches to tremor management and also the non-idealities of the current design.

Subjects' awareness of the non-colinearity of the present CEDO design have varied in an apparently systematic way with the severity of their tremors and the level of damping. When asked to remark on the 'feel' of CEDO 1 and any changes with damping level, the subjects with the most severe tremors made no comments that indicated that they had noticed the non-colinearity or had been bothered by it. Subjects with less severe tremors and non-disabled control subjects noticed nothing remarkable at damping levels up to 35 N/(m/sec), while for higher damping levels they commented on sensations of lumpiness or jerkiness, whose end point position-dependence suggested that they were aware of locations where the non-colinearity was worst.

Conjecture and Observations on Short- and Long-Term After-Effects

To provide a basis for design optimization, detailed experimental data must be gathered on the mechanisms of tremor; the effects of loading; and the relationships between tremor, loading, and the physiology of fatigue and strengthening. More specifically, a physiological understanding of why damping loads attenuate tremor and how they might cause undesirable (*or* desirable) fatigue effects, 'carryover' effects, or strengthening effects from daily use is essential for designing better, more effective tremor-suppression orthoses. Future testing of the CEDO should provide not only the additional data needed to test the effectiveness of the orthosis as a product in ADL, but should also allow the following hypotheses about fatigue, carryover, and strengthening effects to be tested experimentally.

Potential Fatigue Effects

When using CEDO 1, the user's musculature is required to produce three classes of forces: those normally required for intended movement to overcome the impedances and external forces imposed by the limb and the environment; those necessary to move the *orthosis* at the frequencies of the voluntary activity; and those associated with tremor. The onset and development of fatigue depends on the populations (not necessarily distinct) of muscle fibers meeting each of these force requirements, the levels of force required of each population, their fatigue properties, *and* on how all these characteristics vary among tremor types. While there is considerable literature on the metabolic mechanisms of muscle fatigue (51) and on the fatigue characteristics of fiber types I, IIa, and IIb (52,53), there are very few publications on the specificity of involvement of distinct fiber types in pathological tremors or on how normal fiber recruitment patterns are altered by tremorogenic pathologies. Edstrom (54) and Shahani and Wierzbicka (55) have reported some observations of motor unit recruitment and fiber type involvement in Parkinson's disease, essential tremor, spasticity, and cerebellar ataxia, but detailed facts are unavailable. Fatigue effects may also be influenced by the mechanism by which tremor is attenuated. If tremor is centrally driven and tremorogenic muscle torques are undiminished by the presence of damping, for example, fatigue may occur at a different rate than if the applied damping effectively compensates oscillatory reflex dynamics such that the tremor torques themselves are reduced.

CEDO 1 has not yet been used in experimental sessions which approximate a full work day. Rather, experimental sessions to date have run 1.5 hours at most, during which the ratio of tracking time to rest time was 1 to 3 and the duration of each experimental trial was from 30 to 60 seconds. A consistent observation from such sessions is that subjects often describe themselves as being tired when the session is over. One should recognize, however, that virtually all of the subjects were unaccustomed to being physically active due to their disability and that they probably would have found the tracking tasks to be as tiring (or *more* tiring) without damping, that is, it seemed to be limb use in general that the subjects found tiring. In future investigations, the CEDO will be used in ADL during which muscular fatigue is monitored more carefully, perhaps by recording surface myoelectric activity (56,57).

Potential Carryover Effects

A question often raised by clinicians with regard to tremor-suppression orthoses is whether 'carryover' effects might occur immediately after decoupling the limb of the user from the orthosis. To date, no experimental evidence for either a sudden aggravation of tremor or a prolonged attenuation of tremor immediately following the withdrawal of an energy-dissipating load has been reported, nor have data been published which suggest that tremor is generated by a physiological regulator which is adaptive (i.e., one that makes parametric adjustments to maintain a reference level of tremor in spite of external changes which tend to diminish it).

In experiments with CEDO 1 thus far, evaluation protocols have not yet focused on detecting and quantifying beneficial or detrimental after-effects of its use. However, certain related observations have been made. None of the objective performance data analyzed to date have indicated a statistically discernible trend toward increase or attenuation of tremor over the course of a multiple-day series of trials; in other words, use of the CEDO on day i was not consistently followed by higher or lower tremor on day i + 1. One subject did show a dramatic reduction in tremor following the first five or six trials of each session. The protocol did not, however, allow a distinction to be made between a physiologically-mediated tremor-reduction after-effect of damping and other possible effects such as fatigue, (re)familiarization with the tracking task, or hypothetical 'warm-up' effects of the CEDO itself.

Potential Strengthening Effects

A possible longer term result of using the CEDO on a daily basis is related to its incidental function as an exercise device. If CEDO 1 increases the strength of the loaded muscles, then its tremor reduction effectiveness *may be diminished* over time by increasing the forces generated by a given level of tremorogenic motoneuron activity. The potential for such a strengthening effect may depend upon the mechanism by which loading affects tremor; loading which only diminishes movement resulting from unaltered rhythmic muscle force might alter muscular strength differently than loading which reduces muscle force oscillations themselves.

The authors have found no literature to date which explains the long-term effects of pathological tremor on muscle strength or the interaction between exercise physiology and tremor physiology. The literature on muscle response to exercise, however, does make it possible to state explicitly the conditions which must be met for prolonged use of the CEDO to yield muscle changes which decrease its effectiveness. First, to attain the increase in fiber diameter necessary for increased strength, the fast-twitch glycolytic IIb muscle fibers must be recruited during short duration high-intensity exercise (like weightlifting). Lower intensity sustained exercise (like long-distance running) does not increase strength, but rather improves endurance by increasing the number of mitochondria in the I and IIa muscle fibers and by improving the microcirculation around these fibers (58). Diminished effectiveness of the CEDO from extended use would thus require movement with the CEDO requiring force levels sufficient to exercise the IIb fibers, thereby increasing their strength, and larger amplitude tremor resulting from strengthened IIb fibers (i.e., IIb fibers playing a role in tremor movement and, when strengthened, producing higher forces *from the same level of tremorogenic efferent neural activity,* as opposed to just increasing the maximum IIb force level). If these conditions are not met, prolonged use of the CEDO might actually prove favorable if endurance is increased by exercising type I fibers or if strength is increased (countering disuse atrophy or degeneration) by exercising type II fibers in a manner that does not increase tremor amplitude.

Another issue related to strengthening is the phenomenon of fiber type conversion, that is, the documented change in the contractile properties of fast-twitch fibers to slow-twitch characteristics in response to sustained electrical stimulation (59) and the apparent change in the proportion of more fatigue-resistant IIa fibers relative to IIb fibers in endurance-training athletes. If there is an advantageous relationship between the latter effect, any specificity of fiber type involvement in tremor, and any specificity of fiber type strengthening by viscous loading, then the possibility exists that the strengthening effects of a tremor-suppressing orthosis would be *favorable* by means of another mechanism. This too must be the focus of extended-use experiments with the CEDO.

Economy

Estimating an acceptable range for purchase price for a product which provides the functional gains of the CEDO is in part a matter of guessing the policies which third-party payers would adopt if such a product became a reality. A reasonable approach is to identify upper and lower bounds by noting the costs of existing products which are in various ways comparable. Examples include:

1. the standard (passive, free-moving) mobile arm support such as the Jaeco Friction Controlled Arm Positioner priced at $175 (Jaeco Orthopedic Specialities, Hot Springs, AR);
2. an adjustable (passive, rigid) leg orthosis for training which can be found for $700 to $900;
3. a continuous passive motion device for upper extremity therapy which costs approximately $2,500;
4. an above-knee prosthesis which costs anywhere from $2,500 to $20,000 including the fitting and component selection services of a prosthetist;
5. a typical powered wheelchair, which ranges in price from $1,700 for a 3-wheeled scooter to $3,800 for a standard-configuration chair to $10,000 for a unit with extra features, such as special interfaces and power-adjustable seating.

These benchmark prices suggest that a CEDO should be marketed for between $2,500 and $5,000 in order to align with pricing of comparable products. Based on the approximate costs of systems, materials, and labor for fabrication of CEDO 1, it appears that the technology required to produce functionally significant tremor reduction could be sold for a price the market will accept.

Cosmesis

An informal survey of assistive technology presently on the market will quickly reveal that it is difficult to define even a conventional wisdom regarding the appearance of

products for users with disabilities. The recent growth in consumerism among members of this market segment emphasizes that, like the population in general, the consumers of assistive technology assign importance to—and show the same diversity of preference with regard to—the aesthetic impact of what they use. Commercialization of the CEDO, if it is successful, will require careful identification of distinct market segments within the population of tremor-disabled potential customers.

In the absence of any formally-gathered market data, the design of CEDO 1 was guided by a few generic notions of what constitutes acceptable appearance. Other factors being equal, the appearance of a design is improved by being visually and auditorily unobtrusive; by having a look and feel similar to other technology in the user's environment; by avoiding an intimidating or hazardously technological appearance to the user and to those around him or her; and by contributing to a look of dignity, competence, and seriousness of purpose of the user.

DISCUSSION AND FUTURE PLANS

The outcome of this project was the completion, characterization, and initial human-subject testing of CEDO 1, a prototype fixed-base 3-dof orthosis for functional attenuation of intention tremor. Early data collected in 2-dof tracking tasks with tremor-disabled subjects indicates that CEDO 1 can produce sufficient tremor attenuation with sufficient selectivity to permit independent function in some activities which would be impossible without assistance. Further, the apparent success of CEDO 1 was accomplished with commonplace materials and components. A design using off-the-shelf particle brakes, standard aluminum alloy, no force-sensing, and a conventional linkage configuration has apparently met our initial goals, and it has done so with absolute safety.

CEDO 1 is, of course, not an outcome at all in the sense that research and development based on it are ongoing. Most obviously, experiments are planned to test its objective effectiveness with clinically homogeneous groups of subjects with a tremor disability. It is also clear from observing preliminary users that a mechanical design change is needed at the arm cuff to clear the space between the arm of the user and functional tabletop tasks. The most obvious alternative is to suspend the coupler and the user's arm below the orthosis so that little or no mechanism intrudes between the splint and the table surface. In addition, mounting the CEDO base at the front of a user's desk (i.e., *across* from him/her rather than behind and to one side) will allow a more flexed state of the orthosis for the most frequent endpoint positions, mitigating the effects of force-velocity colinearity. Finally, the CEDO 1 loading characteristics themselves must also be subjected to more detailed engineering characterization. If the endpoint is moved through a known controlled time course, will the endpoint forces required to produce that trajectory be predictable from a dynamic model? Do the brakes need altered compensation to improve the simulation of viscous damping?

Once CEDO 2 has been built with these and other altered characteristics, functional evaluation will be undertaken in ADL settings for extended periods. This beta testing will not only provide the additional data needed to test the effectiveness of the orthosis as a product, but also allow the authors' hypotheses about fatigue and exercise effects to be tested experimentally. Finally, a professional approach to market research will be necessary to firmly establish the demand for CEDO, to test the likelihood of third-party reimbursement, and to determine how best to make tradeoffs between competing product features and how the answers to these questions vary among identifiable market segments. This will need to be an ongoing process as new approaches to financing assistive technology are put in place, as new entitlement and civil rights legislation is written, and as consumers with disabilities continue to make themselves heard in the marketplace.

ACKNOWLEDGMENTS

Special thanks to Norm Berube for machining CEDO 1, to Ralph Burgess for designing the flexure-bearing brake mounts, and to Stacy Ho for designing and fabricating parts of the analog circuitry.

REFERENCES

1. Chen A. Analysis of the rehabilitation of tremor patients (Thesis). Cambridge, MA: Sloan School of Management, MIT, 1991.
2. Elble R, Koller W. Tremor. Baltimore: The Johns Hopkins University Press, 1990.
3. Rondot P, Jedynack C, Ferrey G. Pathological tremors: nosological correlates. In: Desmedt JE, ed. Physiological tremor, pathological tremor and clonus. Programs in clinical neurophysiology. Vol. 5. Basel: Karger, 1978:5:95–113.
4. Struppler A, Erbel F, Velho F. An overview on the pathophysiology of Parkinsonian and other pathological tremors. In: Desmedt JE, ed. Physiological tremor, pathological tremor and clonus. Programs in clinical neurophysiology. Vol. 5. Basel: Karger, 1978:5:114–28.

5. Freund HJ, Dietz V. The relationship between physiological and pathological tremor, physiological tremor, pathological tremor and clonus. In: Desmedt JE, ed. Physiological tremor, pathological tremor and clonus. Programs in clinical neurophysiology. Vol. 5. Basel: Karger, 1978:66–89.
6. Shahani BT, Young RR. Action Tremors: a clinical neurophysiological review. In: Desmedt JE, ed. Physiological tremor, pathological tremor and clonus. Programs in clinical neurophysiology. Vol. 5. Basel: Karger, 1978.
7. Aisen M, et al. Glutethimide treatment of disabling action tremor in patients with multiple sclerosis and traumatic brain injury. Arch Neurol 1991:49:513–5.
8. Rosen M, Adelstein B. The effect of mechanical impedance on abnormal intention tremor. In: Proceedings of the 9th Annual Northeast Bioengineering Conference. Elmsford, NY. New York: Pergamon Press, Inc., 1981.
9. Rosen M, Gesink J, Rowell D. Suppression of intention tremor by application of viscous damping. In: Proceedings of the 4th Annual New England Bioengineering Conference, New Haven, CT. 1976:391–4.
10. Rosen M, Sloan M, Biber C. A damped joystick: adaptive control for the tremor-disabled. In: Proceedings of the 2nd Interagency Conference on Rehabilitation Engineering, Atlanta, GA, August 1979:74–9.
11. Dunfee D. Suppression of intention tremor by mechanical loading (Thesis). Cambridge, MA: MIT, 1979.
12. Baiges I, Rosen M. Development of a whole-arm orthosis for tremor suppression. In: Proceedings of the 12th Annual RESNA Conference, New Orleans, LA. Washington: RESNA Press, 1989:290–1.
13. Adelstein B, Rosen M, Aisen M. Differential diagnosis of pathological tremors according to mechanical load response. In: Proceedings of the 10th Annual RESNA Conference, San Jose, CA. Washington: RESNA Press, 1987:829–31.
14. Adelstein B, Rosen M. A high performance two degree-of-freedom kinesthetic interface. In: Proceedings of the Engineering Foundation Conference on Machine Interfaces for Teleoperators and Virtual Environments, Santa Barbara, CA, 1990:108–13.
15. Maxwell S. A modulated-energy-dissipation manipulator and application to suppressing human arm tremor (Thesis). Cambridge, MA: MIT, 1990.
16. Brongo D, Rosen M. Design of the patient interface for a computer-based tremor characterization system. In: Proceedings of the 14th Annual RESNA Conference, Kansas City, MO. Washington: RESNA Press, 1991:128–30.
17. Beringhause S, Rosen M, Huang, S. Evaluation of a damped joystick for people disabled by intention tremor. In: Proceedings of the 12th Annual RESNA Conference, New Orleans, LA. Washington: RESNA Press, 1989:41–2.
18. Hendriks J, Rosen M, Berube N, Aisen M. A second-generation joystick for people disabled by tremor. In: Proceedings of the 14th Annual RESNA Conference, Kansas City, MO. Washington: RESNA Press, 1991:248–50.
19. Bishop G, Clare M, Price J. Patterns of tremor in normal and pathological conditions. J Appl Physiol 1948:1:123–47.
20. Robson J. The effect of loading upon the frequency of muscle tremor. J Physiol 1959:149:29P–30P.
21. Randall J, Stiles R. Power spectral analysis of finger acceleration tremor. J Appl Physiol 1964:19:357–60.
22. Stiles R, Randall J. Mechanical factors in human tremor frequency. J Appl Physiol 1967:23:324–30.
23. Brumlik J, Yap C. Normal tremor: a comparative study. Springfield, IL: Charles C. Thomas, 1970:3–15.
24. Joyce G, Rack P. The effects of load and force on tremor at the normal human elbow joint. J Physiol 1974:240:375–96.
25. Vilis T, Hore J. Effects of changes in mechanical state of limb on cerebellar intention tremor. J Neurophysiol 1977:40(5):1214–24.
26. Marsden C, Meadows J, Lange G, Watson R. The role of the ballistocardiac impulse in the genesis of physiological tremor. Brain 1969:92:647–62.
27. Lippold O. Oscillation in the stretch reflex arc and the origin of the rhythmical 8–12 Hz component of physiological tremor. J Physiol 1970:206:359–82.
28. Young R, Hagbarth K. Physiological tremor enhanced by manoeuvres affecting the segmental stretch reflex. J Neurol Neurosurg Psychiatry 1980:43:248–56.
29. Burne J. Reflex origin of Parkinsonian tremor. Exp Neurol 1987:97:327–39.
30. Flament D, Hore J. Comparison of cerebellar intention tremor under isotonic and isometric conditions. Brain Res 1988:439:179–86.
31. Joffroy A, Lammare Y. Rhythmic unit firing in the precentral cortex in relation with postural tremor in a deafferented limb. Brain Res 1971:27:386–9.
32. Elble R, Randall J. Motor unit activity responsible for the 8 to 12 Hz component of human physiological finger tremor. J Neurophysiol 1976:39:370–83.
33. Jankovic J, Fahn S. Physiologic and pathologic tremors. Ann Intern Med 1980:93:460–5.
34. Elble R. Physiology and essential tremor. Neurology 1986:36:225–31.
35. Elble R, Higgins C, Moody C. Stretch reflex oscillations and essential tremor. J Neurol Neurosurg Psychiatry 1987:50:691–8.
36. Chase R, Cullen J, Sullivan S, Ommaya A. Modification of intention tremor in man. Nature 1965:206(4983):485–7.
37. Homberg, V, Hefter H, Reiners K, Freund H. Differential effects of changes in mechanical limb properties on physiological and pathological tremor. J Neurol Neurosurg Psychiatry 1987:50:568–79.
38. Morrice B, Lee R, Becker W, White D, Hoffer J. Viscous loading improves manual tracking accuracy in humans with cerebellar in coordination. Abstracts of the Society for Neuroscience 17th Annual Meeting 1987:13(3):1700.
39. Sanes J, LeWitt P, Mauritz K. Visual and mechanical control of postural and kinetic tremor in cerebellar system disorders. J Neurol Neurosurg Psychiatry 1988:51:934–43.
40. Corell R, Wijnschenk M. Design and development of the Case research arm aid. Report number EDC 4-64-4. Cleveland, OH: Case Institute of Technology and Highland View Hospital, 1964.
41. Nickel V. Investigation of externally powered orthotic devices. Final project report V.R.A. Grant RD-518. Downey, CA: Attending Staff Association of the Rancho Los Amigos Hospital, Inc., 1964.
42. Karchak A Jr, Allen J. Investigation of externally powered orthotic devices. Final project report V.R.A. Grant Rd-1461-m-67. Downey, CA: Attending Staff Association of the Rancho Los Amigos Hospital, Inc., 1968.

43. Lehneis H, Wilson R. An electric arm orthosis. Bull Prosthet Res 1972:10(17):4–20.
44. Kazerooni H. Human/robot interaction via the transfer of power and information signals, part I: dynamics and control analysis. In: Proceedings of the IEEE International Conference on Robotics and Automation, Scottsdale, AZ, May 1989, 1990:20(2):450–63.
45. Fornoff H, Thornton W. Experimental evaluation of remote manipulator systems. Remotely manned systems: exploration and operation in space. In: Proceedings of the First National Conference, California Institute of Technology, Pasadena, CA, 1972:43–61.
46. Vykukal H, King R, Vallotton W. An anthropomorphic master-slave manipulator system. Remotely manned systems: exploration and operation in space. In: Proceedings of the First National Conference, California Institute of Technology, Pasadena, CA, 1972:199–205.
47. Jaeco Orthopedic Specialities, Hot Springs, AR. Jaeco Arm Positioner. Product literature.
48. Michaelis J. Introducing the neater-eater, Graham Jones, reporter. Action Research: The Magazine of the National Fund for Research into Crippling Diseases 1988:6(1).
49. Van Cott HP, Kinkade RG, eds. Human engineering guide to equipment design. Washington, DC: Superintendent of Documents, US Government Printing Office, 1972.
50. Arnold A, Rosen M, Aisen M. Assessment of a controlled-energy-dissipating-orthosis for the measurement and management of upper extremity intention tremor. J Electromyog Kinesiol 1993:3(3)131–48.
51. Edwards RHT. Human muscle function and fatigue. In: Human muscle fatigue: physiological mechanisms. Ciba Foundation Symposium '82. London: Pitman Medical, 1981.
52. Binder M. Properties of motor units. In: Patton H, et al. eds. Textbook of physiology: excitable cells and neurophysiology, 21st ed. Philadelphia: W.B. Saunders Company, 1989:1–18.
53. Williams C. Metabolic aspects of exercise. In: Reilly, et al. eds. Physiology of sports. London: E. & F.N. Spon, 1990:1–40.
54. Edstrom L. Selective changes in the sizes of red and white muscle fibers in upper motor lesions and Parkinsonism. J Neurolog Sci 1970:11:537–50.
55. Shahani B, Wierzbicka M. Assessment of motor control in normal subjects and patients with movement disorders. In: Chokroverty, ed. Movement disorders. Costa Mesa, CA: PMA Publishing Corp., 1990:87–111.
56. Merletti R, DeLuca C. New techniques in surface electromyography. In: Desmedt JE, ed. Computer-aided electromyography and expert systems. New York: Elsevier Science Publishers B.V., 1989:115–24.
57. Furr P, et al. Use of quantitative electromyography (EMG) in the evaluation of fatigue associated with pressure glove work. In: SAE technical paper series 891473, 19th Intersociety Conference on Environmental Systems, 1989.
58. Vander A, Sherman J, Luciano D. Human physiology: the mechanisms of body function. 4th ed. New York: McGraw Hill Company, 1985.
59. Edstrom L, Grimby L. Effect of exercise on the motor unit. Muscle Nerve 1986:9:104–26.