Department of Veterans Affairs

Journal of Rehabilitation Research and Development Vol. 32 No. 2, May 1995
Pages 128–134

The prediction of metabolic energy expenditure during gait from mechanical energy of the limb: A preliminary study

Scott A. Foerster; Anita M. Bagley, PhD; C. Dan Mote, Jr., PhD; Harry B. Skinner, MD, PhD
AT&T Bell Laboratories, Whippany, NJ 07981; Motion Laboratory, Shriners Hospital, Greenville, SC 29601; University of California–Berkeley, Berkeley, CA 94720; Department of Orthopaedic Surgery, University of California–San Francisco, San Francisco, CA 94143; VA Medical Center, Long Beach, CA 90822

Abstract—Measurements of metabolic energy consumption and free-walking velocity were recorded for four persons with trans-femoral amputation with variations of prosthesis mass and mass distribution. Hot-film anemometers, rate gyroscopes, and a force platform were used to measure prosthetic limb segment velocities and ground reaction forces. Metabolic energy consumption for the nine configurations of mass and mass distribution averaged 1.177 cal/kg/m with a standard deviation of ±0.052 cal/kg/m. Two measures of mechanical work of the amputated extremity, one based on power developed across joints (W_1) and the other based on changes in energy of the body segments (W_2), were computed to be 0.162 ±0.014 and 0.175 ±0.025 cal/kg/m, respectively. A linear regression model led to rejections of both W_1 and W_2 as predictors of metabolic energy expenditure of the amputee at a significance level of 0.05.

Key words: *amputation, energy expenditure, gait analysis, rehabilitation.*

Address all correspondence and requests for reprints to: Harry B. Skinner, MD, PhD, UCI Medical Center, Department of Orthopaedic Surgery, 101 City Drive South, Building 29-A, Orange, CA 92668-5382.

Mr. Foerster is on the technical staff of AT&T Bell Labs; Dr. Bagley is with the Motion Laboratory of the Shriners Hospital for Crippled Children; Dr. Mote is Vice Chancellor of University Relations, University of California, Berkeley; and Dr. Skinner is Professor and Chairman of Orthopedic Surgery at the University of California, Irvine, and is also affiliated with the VA Medical Center, Long Beach, CA.

This project was supported by the Department of Veterans Affairs Rehabilitation Research and Development Service, Washington, DC.

INTRODUCTION

A major problem in the rehabilitation and reintegration of persons with amputation has been identified as the high metabolic energy cost of ambulation (1,2). This is particularly so for dysvascular trans-femoral (AK) amputees who approach anaerobic conditions during ambulation (3). If specified mechanical energy measurements reliably and accurately predicted metabolic energy expenditure, several benefits would be realized in regard to optimizing lower-limb prosthesis performance. Since prostheses can be designed in terms of mechanical variables, changes in design would be reflected in changes in metabolic energy expenditure. The establishment of a metabolic energy predictor, based on mechanical measurements, would also allow the energy aspects of gait to be studied through computer simulation. Instantaneous sources of energy expenditure during the gait cycle could be identified, and such analysis could be used in rehabilitation of pathological gait.

In a review of the measurement of mechanical energy associated with human movement, Winter notes that consensus is lacking in regard to the best method of calculating mechanical energy expenditure (4). Methods can be grouped into three categories. The first and second categories include work calculations based on power developed across joints and on changes in the energy of the body segments, respectively. In the third category, a separate energy

for the body center of mass and energy of the limbs relative to the center of mass are calculated (5). Although mechanical work is always less than the metabolic energy expenditure, since many physiological muscle processes are not represented in the model, mechanical work measures might be used to predict metabolic energy expenditure.

Human locomotion is accomplished by the exertion of muscle moments across the joints. Direct measurement of muscle force is impractical, but statically equivalent moments at the joints can be computed from ground reaction forces and limb segment accelerations. The muscle work of a rigid, linked model of N segments can be computed by:

$$W_1 = \int_{t_1}^{t_2} \sum_{i=1}^{N-1} M_{i,i+1}\left(\dot{\theta}_{i+1} - \dot{\theta}_i\right) \qquad [1]$$

where $M_{i,i+1}$ is the muscle moment acting between body segments i and i+1, and $\dot{\theta}_{i+1}$ and $\dot{\theta}_i$ are the angular velocities of segments i+1 and i, respectively. Only single joint muscles are modeled by Equation 1 (6). In addition, isometric contractions, elastic energy storage in muscles, and co-contractions of antagonistic muscles are not modeled, and are substantial limitations. Work calculated by Equation 1 is positive for concentric contraction and negative for eccentric contraction. The metabolic energy cost is always positive. A measure of metabolic energy expenditure associated with muscle work of Equation 1 is proposed:

$$W_1 = \int_{t_1}^{t_2} \sum_{i=1}^{N-1} \left|M_{i,i+1}\left(\dot{\theta}_{i+1} - \dot{\theta}_i\right)\right| dt \qquad [2]$$

Aleshinsky concluded W_1 is the most promising measure of mechanical work (7).

A measure of mechanical work based on changes in the energy of the leg can also be formulated. The total energy of the leg is the sum of the potential plus kinetic energies of the thigh and shank (including the foot). The instantaneous energy "rigid-body" model for motion in the sagittal plane is:

$$\begin{aligned} E_{leg} = {} & m_s g z_{cms} + \tfrac{1}{2} m_s\left(\dot{x}_{cms}^2 + \dot{z}_{cms}^2\right) + \tfrac{1}{2} I_s \dot{\theta}_s^2 \\ & + m_t g z_{cmt} + \tfrac{1}{2} m_t\left(\dot{x}_{cmt}^2 + \dot{z}_{cmt}^2\right) + \tfrac{1}{2} I_t \dot{\theta}_t^2 \end{aligned} \qquad [3]$$

where m_s, m_t are the segment masses, z_{cms}, z_{cmt} are the heights of the segment centers of mass above a defined reference, $\dot{x}_{cms}$, $\dot{x}_{cmt}$, $\dot{z}_{cms}$, $\dot{z}_{cmt}$ are the velocity components of the segment centers of mass, Is, It are the rotational inertias about the segment centers of mass and θ_s, θ_t, are the angular velocities of the segments. For positive metabolic work only, the work measure proposed can be represented by:

$$W_2 = \int_{t_1}^{t_2} \left|\frac{dE_{leg}}{dt}\right| dt \qquad [4]$$

The metabolic energy expenditure during gait for the entire organism will be greater than that for the trans-femoral prosthetic limb. However, since the energy expenditure of persons with trans-femoral amputation is significantly increased above normal (1), it was hypothesized that metabolic energy expenditure by the subject may be adequately predicted by one of these measures of mechanical energy of the limb.

METHODS

Four male subjects with traumatic trans-femoral amputation participated in this study (**Table 1**). All subjects were accustomed to wearing a prosthesis and did not suffer from residual limb pain, swelling, or pressure sores. Each subject signed a consent form approved by the University of California, San Francisco, Human Studies Committee. A lightweight prosthesis, consisting of a Teh Lin (Daw Industries, Inc., Eden Prairie, MN) graphite single-axis knee unit with adjustable constant friction and an adjustable internal extension assist, a Teh Lin graphite pylon and foot adapter, and a SACH foot, was constructed for each subject. Also, a lightweight polyester resin duplicate of each subject's current total-contact suction socket was fabricated. The addition of a swing phase control unit to the prosthesis was unnecessary because only free-walking velocity was studied. This also reduced the weight of the prosthesis. No mandate on footwear was imposed.

Instrumentation was developed to evaluate both W_1 and W_2. Calculation of W_2 required measurement of segment masses and the velocity of the centers of mass, as well as the inertias and angular velocities. In addition, measurement of the floor reaction forces was necessary to estimate the hip moment (M_h) for calculation of W_1 (**Figure 1**).

The mass, center of mass location, and inertia of each subject's residual limb were calculated by discretizing it into 2-cm thick elliptical slices. Measurements of the an-

Journal of Rehabilitation Research and Development Vol. 32 No. 2 1995

Table 1.
Anthropometric data.

Subj.	Age	Body Mass Length (kg)	Height (m)	Residual Limb Length (m)	Floor-to-Knee Axis (m)	Combined Residual Limb and Socket Parameters M (kg)	Y_{cm} (m)	I_{cm} (kg-m²)	Combined Prosthetic Shank and Shoe Parameters M (kg)	X_{cm} (m)	Y_{cm} (m)	I_{cm} (kg-m²)	Combined Normal Shank and Foot Parameters M (kg)	Y_{cm} (m)	I_{cm} (kg-m²)
1	63	77.5	1.74	.260	.514	3.09	.220	.0540	1.65	.023	.325	.0611	3.86	.249	.103
2	58	81.8	1.70	.290	.551	4.71	.204	.0583	1.75	.035	.350	.0727	4.39	.239	.131
3	66	79.3	1.79	.270	.533	4.89	.265	.0855	1.69	.030	.327	.0709	3.97	.239	.121
4	68	74.5	1.79	.370	.503	4.45	.215	.0682	1.73	.029	.329	.0615	4.17	.238	.116

M = mass; Y_{cm} = center of mass coordinate in distal direction (reference is knee axis); X_{cm} = center of mass coordinate in interior direction (reference is knee axis); I_{cm} = Inertia about an axis perpendicular to the sagittal plane and located at the center of mass.

terior-posterior and medial-lateral dimensions of each slice were used to estimate major and minor axes of the ellipse. An average uniform density of 1050 kg/m³ was assumed (8). The center of mass of the prosthetic leg was determined by suspending it from two points and locating the intersection of the vertical lines through the support points. The inertia of the prosthetic leg was predicted from the measured period of oscillation when it was suspended at the knee axis. The center of mass and inertia of the thigh portion of the prothesis were determined in the same manner.

Translational velocities of the limb segments were measured using hot film anemometry. Dual sensor, x-configuration (TSI 1240-20, TSI Inc., St. Paul, MN) probes enabled velocity determination in the sagittal plane. Probes operated at 350° F, and were calibrated to yield an air velocity vector in polar coordinates that was determined uniquely in a 90° range. Sun, et al. assessed the accuracy of the hot film measurements to be ±0.1 m/s and ±10° at speeds greater than 0.25 m/s (9). Pendulum calibration methods have since been refined to yield ±5° accuracy in angle measurement for speeds greater than 0.25 m/s.

Miniature rate gyroscopes (United States Time Corp. #400) were used to measure the angular velocities of the thigh and shank. These units have a nominal full scale range of 400°/s, are linear within ±1.0 percent of full scale, and weigh 120 g. **Figure 2** shows the instrumented prosthesis. Identical hot film probes and rate gyroscopes were attached to the thigh and shank.

Ground reaction forces were recorded with a Kistler piezoelectric, multi-component, measuring platform (type 9261A, Kistler Instrument Corp., Amherst, NY). Precision and accuracy given by the manufacturer, are ±2 percent of full scale for force components.

Walking trials were conducted in a 12-m long gait laboratory. The configurations of distribution of mass on the prosthesis that were tested were 0, 1.70 kg, 2.84 kg, and 3.97 kg of added mass located 17, 25, and 33 cm distal to the knee axis. Configurations were tested in a random order, and two trials were recorded for each configuration. The prosthetic knee friction setting was adjusted between trials, and data were recorded after the subjects felt accustomed to a new configuration. A starting location that allowed at least four gait cycles before stepping on the force plate was selected. Data were recorded beginning with the first step.

All data were recorded on an IBM PC/AT using the ASYSTANT (Asyst Software Technology, Inc., Rochester, NY) data acquisition software package. Subjects wore a compact backpack (1.0 kg) which housed the hot film and rate gyroscope electronic units, and a 15 m cable linked the backpack to the computer. Signals were sampled at 150 Hz and collected for 10 seconds.

The work measures were calculated for the gait cycle starting when the prosthetic heel contacted the force plate. The anemometers measured the direction of the velocity vector relative to a reference frame fixed to the leg. The linear velocities in earth-fixed coordinates were deter-

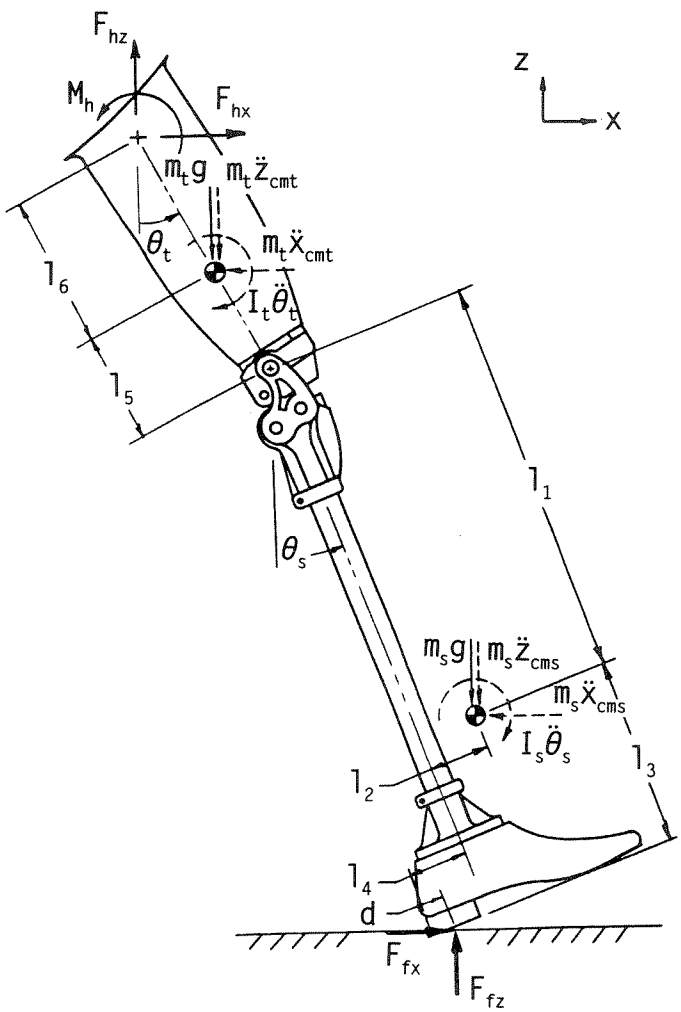

Figure 1.
Free-body diagram showing the forces and moments acting on the prosthetic leg. The moment at the hip is calculated from the equation:

$$
\begin{aligned}
M_h &= I_t\ddot{\theta}_t + I_s\ddot{\theta}_s + m_s\ddot{X}_{cms} \\
&\left(l_1\cos\theta_s - l_2\sin\theta_s + l_6\cos\theta_t + l_5\cos\theta_t\right) \\
&+ m_s(\ddot{Z}_{cms} + g)(l_1\sin\theta_s + l_2\cos\theta_s + l_6\sin\theta_t + l_5\sin\theta_t) \\
&+ m_t\ddot{X}_{cmt}l_6\cos\dot{\theta}_t + m_t(\ddot{Z} + g)\, l_6\sin\theta_t \\
&- F_{fx}(l_1\cos\theta_s - l_2\sin\theta_s + (l_4 + l_2 - d) \\
&\sin\theta_s + l_3\cos\theta_s + l_6\cos\theta_t + l_5\cos\theta_t) \\
&- F_{fz}(l_1\sin\theta_s + l_2\cos\theta_s + (-l_4 - l_2 + d) \\
&\cos\theta_s + l_3\sin\theta_s + l_6\sin\theta_t + l_5\sin\theta_t)
\end{aligned}
$$

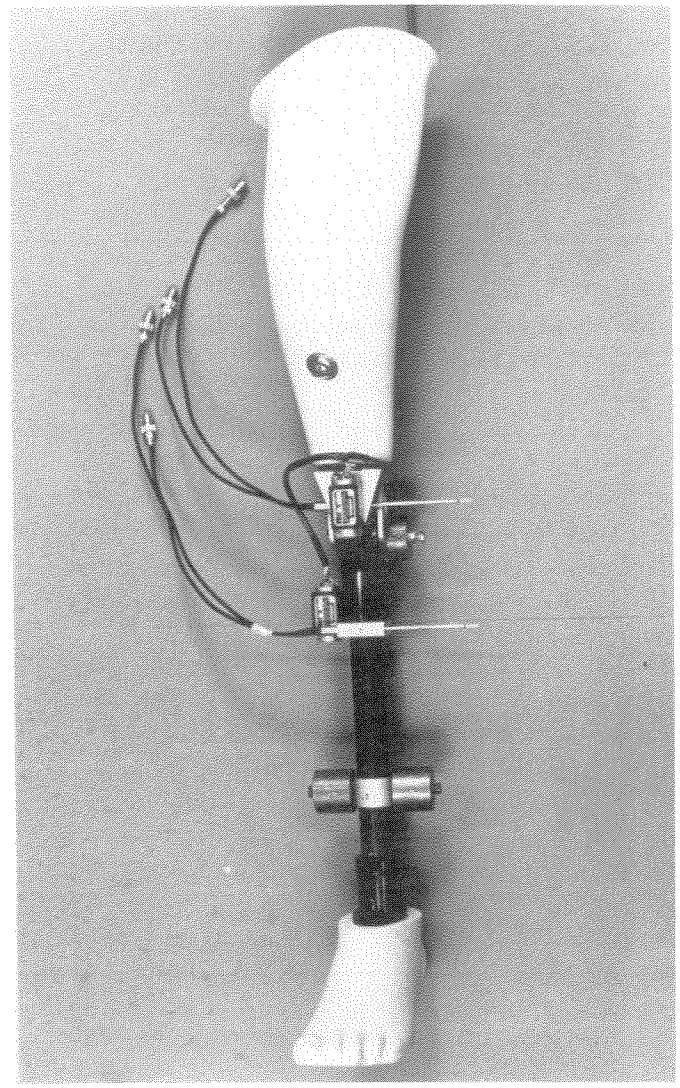

Figure 2.
Prosthesis instrumented for measurements of mechanical work. Two horizontal hot film probes used for linear velocity measurement are located at "knee" level and several inches below. The small rectangular box attached to each probe is a rate gyroscope used for angular velocity measurement.

mined by transformation using the orientation of the limb segments calculated by integrating the angular velocities. The velocity of the center of mass of a segment was calculated from the linear velocities at the anemometer and the segment angular velocity. The height of the center of mass was computed by integrating the vertical velocity. Energy was computed from the measured and computed data. Linear and angular accelerations of the thigh and shank were required to compute the hip moment (**Figure**

1 and Equation 2). Accelerations were calculated from the derivative of cubic splines fit to the linear and angular velocity data in a least squares sense (10). W_1 and W_2 were normalized by body weight and distance traveled to facilitate comparison with metabolic energy values.

The precision of W_1 and W_2 was studied by superimposing normally distributed, zero mean, stochastic errors on measured velocities and forces from a sample gait trial and recalculating work parameters 100 times.

Metabolic energy expenditure measurements were conducted in a 50-meter long straight and level corridor using indirect calorimetry by collecting exhaled gases in a 60-liter Douglas bag. Only free-walking velocity trials were investigated. The subject was given sufficient time to become accustomed to the prosthesis changes before the experiments. Total test time was approximately 5 minutes consisting of a 3-minute warm-up period to ensure that the muscles did not utilize anaerobic sources of energy (11), 1 minute to prime the airways, and 1 minute of exhaled gas collection. The order of test configurations was random, and three consecutive replications of the test were recorded at each configuration. Fatigue was minimized by allowing subjects to rest during the changing of weights.

The oxygen content of the exhaled gas was measured with a blood gas analyzer (Instrumentation Laboratory, IL 13040). A spirometer (RamAir 9200) was used to measure gas volume. Energy values were calculated from the formula recommended by Durnin and Passmore (11) and converted to units of cal/kg-m.

RESULTS

A summary of the data is given in **Table 2.** The average metabolic energy expenditure for the nine configurations of mass and mass location was 1.177 ±0.052 cal/kg/m. This compares with averages of 0.162 ±0.014 cal/kg/m and 0.175 ±0.025 cal/kg/m for W_1 and W_2, respectively. Units of cal/kg/m can be converted to mlO_2/kg/m by dividing by 5.

A linear regression relating metabolic energy expenditure to added mass, mass location, and W_1 or W_2, with tests for differences in subjects, was examined (12). All variables were rejected as predictors of metabolic energy expenditure at a significance level of 0.05. W_1 was calculated with a precision of ±0.0028 cal/kg-m (95 percent confidence) based on computations with random errors superimposed on measured variables from a sample gait trial. The precision of W_2 was ±0.0054 cal/kg-m (95 percent confidence). Linear regression of W_2 on W_1 yielded no relationship (p=0.18).

DISCUSSION

Previous investigators have examined the relation of metabolic energy consumption to mechanical work measures (13,14). Ralston and Lukin reported that W_2 correlated with metabolic energy consumption for changes in the total energy level of the body (13). However, Burdett et al. reported the absence of a correlation (r=0.18) when work measures were expressed per unit distance traveled (14). Neither author investigated mechanical measure W_1.

This study addressed the relation between metabolic energy expenditure and mechanical work measures of the prosthetic lower extremity. A significant relation would permit simplified evaluation and feedback in the rehabilitation of the person with amputation. The lack of correlation between W_1 or W_2 and metabolic energy expenditure in subjects with trans-femoral amputation may be related to the fact that these measures were based on the affected limb only. The metabolic demands placed on the person with amputation due to his prosthesis may be reflected in the work performed by his unaffected limb and the remainder of his body.

Hot film anemometers and rate gyroscopes proved to be an effective and automated means of measuring the velocities of the thigh and shank. The precision of hot film velocity measurements is comparable to that of video imaging systems (10), and manual coordinate-tracking is not required. Also, synchronization of film and force plate data is not problematic because all measurements are recorded as electrical signals. Hot films and rate gyroscopes are less expensive than electro-optical systems that automatically digitize data. However, hot film anemometers are fragile, requiring careful handling and a calibrating system. Also, subjects were required to carry an electronics backpack. Rigid mounting of the anemometers and gyroscopes to a prosthesis is easily done, though similar attachment to a normal leg would be more difficult.

The average metabolic energy expenditure in this study for all prosthesis configurations was lower than previously reported (1). The highest energy configurations of this study correspond to the previous reports for traumatic trans-femoral amputees. This may suggest that the measurements of previous studies were made with less energy efficient prostheses.

Table 2.
Summary of average energy data for trans-femoral amputees with various weights at 3 locations (standard deviations are given in parentheses).

Mass (kg)	Energy Measure (Cal/kg/m)	Base Prosthesis		Location of Mass from Knee Axis (cm) 17		25		33	
0	W_1	0.144	(0.063)						
	W_2	0.103	(0.027)						
	Metabolic	1.301	(0.238)						
1.70	W_1			0.152	(0.032)	0.153	(0.033)	0.142	(0.035)
	W_2			0.143	(0.043)	0.158	(0.056)	0.146	(0.026)
	Metabolic			1.108	(0.143)	1.190	(0.191)	1.158	(0.208)
2.84	W_1			0.159	(0.035)	0.158	(0.048)	0.174	(0.063)
	W_2			0.162	(0.046)	0.171	0.047)	0.181	(0.065)
	Metabolic			1.118	(0.237)	1.208	(0.183)	1.238	(0.220)
3.97	W_1			0.158	(0.042)	0.178	(0.056)	0.185	(0.051)
	W_2			0.204	(0.068)	0.201	(0.049)	0.211	(0.077)
	Metabolic			1.160	(0.213)	1.150	(0.198)	1.263	(0.272)

CONCLUSIONS

Added mass, mass location, W_1, and W_2 of the prosthetic extremity were rejected as predictors of metabolic energy expenditure (cal/kg-m) at a significance level of 0.05. Measurement of mechanical work of the prosthetic limb would not be beneficial in managing the rehabilitation of persons with trans-femoral amputation. No relationship was found between W_1 and W_2.

ACKNOWLEDGMENTS

This project would not have been possible without the participation of the four amputee subjects. Their cooperation, patience, and genuine interest in the progress of research will be remembered.

REFERENCES

1. Bagley AM, Skinner HB. Progress in gait analysis in amputees: a special review. Crit Rev Phys Rehabil Med 1991:3:101–20.
2. Nissen SJ, Newman WP. Factors influencing reintegration to normal living after amputation. Arch Phys Med Rehabil 1992:73:548–51.
3. Waters RL, Perry J, Antonelli D, Hislop H. Energy cost of walking of amputees: the influence of level of amputation. J Bone Joint Surg 1976:58A:42–6.
4. Winter DA. Calculation and interpretation of mechanical energy of movement. In: Hutton RS, ed. Exerc Sport Sci Rev. Philadelphia: Franklin Institute Press, 1979.
5. Aleshinsky SY. An energy 'sources' and 'fractions' approach to the mechanical energy expenditure problem—I. basic concepts, description of the model, analysis of a one-link system movement. J Biomech 1986:19:287–93.
6. Bresler B, Berry FR. Energy and power in the leg during normal level walking. Prosthetic Devices Research Project, University of California, Berkeley, Series 11, Issue 15, 1951.
7. Aleshinsky SY. An energy 'sources' and 'fractions' approach to the mechanical energy expenditure problem—IV. Criticism of the concept of 'energy transfers within and between links'. J Biomech 1986:19:307–9.
8. Schutte LM. Determination of inertial properties of the body for sports biomechanics. Biomechanics in Sport—A 1987 Update 1987:6:27–31, DE-Vol 13, BED Vol 6.
9. Sun SC, Mote CD Jr, Skinner HB. Use of hot wire anemometry to measure velocity of the limb during human movement. J Biomed Eng 1992:14:435–39.

10. Soudan K, Dierckx P. Calculation of derivatives and Fourier coefficients of human motion data, while using spline functions. J Biomech 1979:10:21–6.
11. Durnin JVGA, Passmore R. Energy, work and leisure. Toronto: Heinemann Educational Books Ltd., 1967.
12. Devore JL. Probability & statistics for engineering and the sciences. Monterey: Brooks/Cole Publishing Co., 1982.
13. Ralston HJ, Lukin L. Energy levels of human body segments during level walking. Ergonomics 1969:12:39–46.
14. Burdett RG, Skrinar GS, Simon SR. Comparison of mechanical work and metabolic energy consumption during normal gait. J Orthop Res 1983:1:63–72.