Department of Veterans Affairs

Journal of Rehabilitation Research and Development Vol. 32 No. 2, May 1995
Pages 141–148

Volumetric determinations with CAD/CAM in prosthetics and orthotics: Errors of measurement

Magnus Lilja, CPO, Lic Med Sci and Tommy Öberg, MD, PhD
Department of Biomechanics and Orthopaedic Technology and Department of Orthopaedic Surgery, University of Linköping, Linköping, Sweden; Department of Biomechanics and Orthopaedic Technology, University College of Health Sciences, Jönköping, Sweden

Abstract—During the next decade CAD/CAM technique will probably become routine in prosthetics and orthotics, not only as a complement to manual techniques, but also introducing new possibilities. However, even complex and sophisticated techniques have errors of measurement that must be considered. Such errors are of two principal kinds: systematic errors and random errors. In this study we have evaluated the Swedish CAPOD system with respect to volumetric determinations. We used two types of reference objects for volume determinations: cylinders and amputation residual limb models. Three different sizes were examined of each type of object. Volume measurements with CAPOD were compared with volumes obtained by water immersion or mathematical calculation (cylinders only). We found a constant, linear systematic error of +2.5%. Such an error can easily be corrected for. The random error, represented by the coefficient of variation, was 0.5%, which means that there is a theoretical possibility to detect volume changes exceeding 1%. We consider the precision sufficient for clinical practice in prosthetics and orthotics. Biological variations due to soft tissue deformation must be added on top of these errors. Such deformations were not evaluated in this study.

Key words: *amputation, CAD/CAM, errors of measurement, trans-tibial, volumetric.*

Address all correspondence and requests for reprints to: Magnus Lilja, CPO, Lic Med Sci, Department of Biomechanics and Orthopaedic Technology, University College of Health Sciences, P.O. Box 1038, S-551 11, Jönköping, Sweden.

INTRODUCTION

During the last decade, several CAD/CAM systems have been developed for use in prosthetics and orthotics (1,2). The potential advantages of this new technique are 1) even quality of prosthetic sockets, 2) time saving, 3) better fitting of sockets, and 4) lower cost. The new technique can be used not only as a complement to traditional prosthesis making, but also in new applications. For example, volumetric determinations can be used to decide the proper time for permanent prosthetic fitting. The computer technique also makes computer integrated manufacturing (CIM) possible, integrating the production of prosthetic sockets with administrative routines such as patient records, appointments, deadlines for follow-up, and economy (3). Nevertheless, use of the CAD/CAM technique is rare in daily prosthetic and orthotic practice, and is still considered exclusive. Over the next decade, however, with further technical advances, we can foresee an increased use of this technique, which will probably become routine (3). With more sophisticated and complex instruments, there is a danger that we rely too much on the instruments and do not consider the errors of measurement. All instruments, no matter how sophisticated, have errors of measurement. Error estimations related to calibration methods for CAD/CAM have been published by Kofman et al. (4), but to our knowledge no study has yet been published on measurement errors in CAD/CAM technique applied to residual limb models or real residual limbs.

Journal of Rehabilitation Research and Development Vol. 32 No. 2 1995

In all kinds of experimental work, the degree of accuracy and precision is of utmost importance. Errors of measurement are unavoidable, and they can—especially if they are unknown—seriously jeopardize the whole measurement. If, however, they are known and quantified, it is possible to handle them and maybe also to correct for them. If we do not know anything about the measurement errors, the measurement will be of almost no value. For this reason it is necessary to estimate such errors, especially if the instrument is to be used in research studies.

Accuracy and precision are not ends in themselves. In basic research we do not always know the final use of a measurement or a new technique. Consequently, it may be justified to be more careful than what is demanded from the actual problem, because the extra accuracy and precision may be needed to solve specific problems later on. Furthermore, the more accurate and precise, the more fields of application the new technique will find.

The sources of measurement errors may be (5,6):

- the observer/experimenter
- the instrument
- the environment
- the object under observation.

The experimenter may be tired or careless, or poorly informed or trained. There may be no standardized measuring procedures or guidelines for the measurement. The instruments may be badly calibrated, the algorithms for calculation may be erroneous, there may be approximation errors, the environment may not be standardized, the test objects may change during the measurement, etc.

Three questions of interest may arise in the context of measurement (7): 1) How accurate are the measurements—are we measuring what we are supposed to be measuring (accuracy, validity)? 2) How reproducible are the numbers we produce (precision, reproducibility, reliability)? and 3) What do those numbers convey about the condition of the test patient (utility)? The first two aspects are considered in this study.

Error Calculation

A test measurement x_i (x_i denotes an arbitrary measurement value) is in itself quite worthless if it is not related to the "true" value ξ_i and the error of measurement ε_i. We can assume the following simple structure for a test measurement:

$$x_i = \xi_i + \varepsilon_i \qquad [1]$$

Errors of measurement are of two main types (8,9): systematic errors (bias, deterministic errors, inaccuracy) and random errors (irregular errors, stochastic variation, imprecision). If we know the "true" value, the systematic error or bias is the difference between the average of a number of test measurements and the "true" value. This error may be constant or it may follow some mathematical function, for example a periodic error. It can be impossible to separate instrument errors from errors due to the experimenter.

There is always a true value, but often we do not know it. If, however, measurements can be performed a number of times on a standardized test object, under strictly standardized conditions, and with methods that are well established, the average values from such measurements can be used as reliable estimates of the "gold standard." The best estimate of the gold standard is the mean of repeated measurements with calculation of the boundaries within which it may be included (8,10). In practice, the systematic error of a measurement is essentially a comparative judgment—a measure of the extent to which the average of different measurements agree or disagree in terms of results obtained by measurement on a given test object. We have used this method in the present study.

According to the central limit theorem, random errors follow the Gaussian distribution (7,9):

$$\varphi(\varepsilon) = \frac{1}{\sigma\sqrt{2\pi}} e^{\varepsilon^2/2\sigma^2} \qquad [2]$$

Given a sample of n replicated measurements x_i on a single test object, the sample mean μ should converge in probability (as n increases) to the "true" value ξ_i, unless there is a systematic error (bias). The error mean μ_ε converges to zero, and the error variance σ^2_ε is equal to the variance σ^2 of the replicated measurements. The standard deviation σ is a direct measure of the imprecision (random error) of the measurement (8).

Often the error is calculated as the relative error, that is, ε_i/ξ_i. ξ_i is unknown. If, however, the error is small, the relative error can be calculated as ε_i/x_i or $100 \times \varepsilon_i/x_i$ (percentage error relative to the measurement). The error of measurement can never be estimated by one single measurement. To reveal errors of measurement, the same observer can perform repeated measurements on the same test object.

If the measured data are to be used in further calculations, the problem of error propagation must be considered. Such error propagation can be calculated with

methods based on differential calculus, but are not considered in this article (6,9–11).

Aim of the Study

If CAD/CAM technique is used in research and practice, it is necessary to evaluate the different kinds of measurement errors associated with this technique. In a previous study, we have compared CAD/CAM made prosthetic sockets with conventionally made ones (12). We used the Swedish CAPOD system (13). The aim of the present study was to examine errors of measurement of the CAPOD system in volumetric measurements using cylinder and residual limb models with known volumes.

METHOD

Test Objects

Two types of objects were used: cylinders and residual limb models of different sizes.

Cylinder models: Three homogeneous aluminum models were used. The diameters were 69.5 mm, 100.0 mm and 150.0 mm respectively. The height of the models was 200.0 mm. They were measured with a vernier caliper and their surfaces were painted white to increase their reflectivity to laser light.

Residual limb models: Three plaster-of-Paris models of below-knee amputation residual limbs were made. Three different sizes were used. They were lacquered several times to make them water resistant.

Reference Measurements of Volume

Water immersion technique: The test objects were immersed in a vessel filled with de-ionized water. At the water level there was a spout, through which any displaced water was released. The cylinders were totally immersed, and the residual limb models were partially immersed to a black level mark at the position of the knee joint. The displaced water was collected and weighed on a precision balance. Temperature and atmospheric pressure were recorded in order to have control over considerable alterations. The density of de-ionized water at 22° C is 0.997770 kg/dm^3. From the weight of the displaced water, the volume of the immersed object was calculated. Five repeated measurements were performed on each object. The experimental set-up is shown in **Figure 1.**

Due to the capillary forces (forces of surface tension and adhesive forces acting on the test object) the water surface is curved near the test object. This phenomenon could introduce a small error of measurement. This error was calculated and was found to be less than 0.1 percent (the calculations are not included in this article). We regard this error small enough to be discarded in the further calculations.

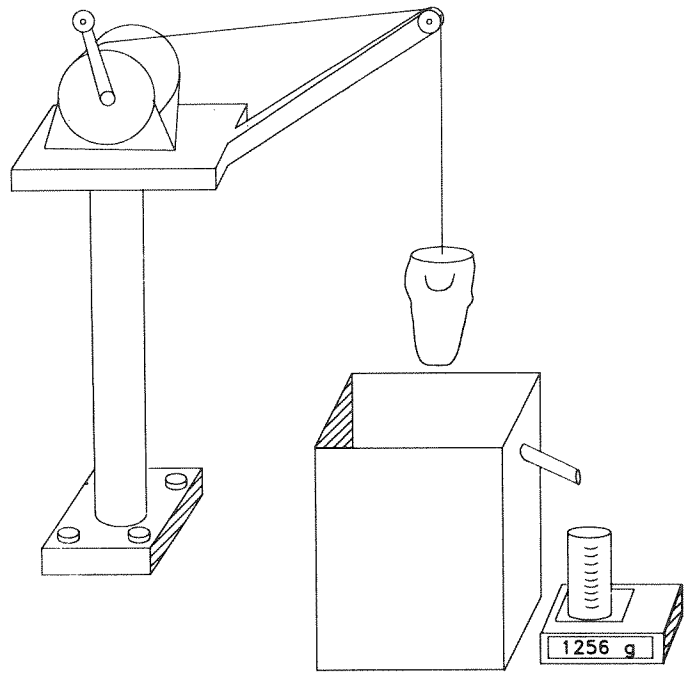

Figure 1.
Equipment for volume measurement with water immersion technique.

Mathematical calculation of cylinder volumes: The cylinder volumes were calculated according to standard mathematics.

CAPOD measurements of volume: The CAPOD system has been described in an earlier article by Öberg et al. (13). The system consists of a laser scanner for noncontact scanning, a CAD software to perform socket design rectifications and a milling machine to mill the socket mold. The CAD/CAM system was used without any modifications for the study. The system was calibrated according to the guidelines given by the CAPOD Systems CO (4). Two different laser scanners were tested: one in Jönköping and one in Uppsala, Sweden.

The test objects were scanned, and the volumes were computed. For the cylinders, the total volume was calcu-

lated; for the residual limb models, the volume up to the black level mark was calculated. Five repeated measurements were performed on each object.

Statistical Analysis

Means, variances, standard deviations (SD), coefficients of variation (CV, standard deviation as percent of the mean value), and students *t*-values were calculated according to standard procedures (14).

RESULTS

Systematic Errors

The absolute volumes of the cylinder and residual limb models, calculated with different methods, are shown in **Tables 1** and **2.** In **Tables 3** and **4**, the differences between the CAPOD measurements and the results obtained with the reference methods are shown.

Cylinder models: For the cylinder models, the differences are not consistent and in many cases not statistically significant. **Figure 2** shows that the measurements with all methods are close to each other.

Residual limb models: For the residual limb models there was a systematic difference of about 2.5 percent in all cases. The CAPOD system overestimated the volumes. The differences were statistically significant and of the same magnitude for both suites of test equipment. These differences are clearly seen in **Figure 3.**

Random Errors

The random errors were estimated by SD and CV. The values are shown in **Tables 1** and **2.** The CV was very small, in most cases below 0.5 percent. Thus, 95 percent of the random variation may be included within an interval of mean volume ±1 percent (mean ±2CV).

DISCUSSION

One idea underlying the introduction of CAD/CAM technique in prosthetics and orthotics has been that contacting methods may introduce measurement errors due to deformation of the soft tissues or plaster cast, while noncontacting optical scanning may enable measurement of higher accuracy (4). But CAD/CAM methods cannot only replace conventional methods, they also have a new potential of themselves. For example, volume determination can be used to decide when postoperative volume changes cease. This is probably the proper time for permanent prosthetic fitting. Hitherto, we have not had simple methods for such volume determinations. Fernie et al. (15) developed one complex method to evaluate volume fluctuations and some other volume studies with water displacement methods have been performed (16,17).

We chose two different methods for volume determinations as references to represent the gold standard. The mathematical calculations have no systematic errors, and the random errors were considered negligible. The water

Table 1.
Cylinder volumes (ml). Means, standard deviations (SD) and coefficients of variation (CV).

Method		Model 1	Model 2	Model 3
Mathematical calculation		758.7	1572.4	3534.3
Water immersion	mean	754.9	1570.1	3529.3
	SD	3.04	13.30	7.35
	CV	0.40%	0.85%	0.21%
CAPOD Jönköping	mean	770.0	1583.0	3518.8
	SD	5.39	4.06	1.9
	CV	0.70%	0.26%	0.05%
CAPOD Uppsala	mean	768.2	1566.0	3523.6
	SD	4.82	7.65	9.10
	CV	0.63%	0.49%	0.26%

Table 2.
Stump volumes (ml): Means, standard deviations (SD) and coefficients of variation (CV).

Method		Model 1	Model 2	Model 3
Water immersion	mean	1020.00	1202.2	1458.6
	SD	6.71	6.41	15.76
	CV	0.66%	0.53%	1.08%
CAPOD Jönköping	mean	1051.0	1234.0	1489.8
	SD	6.44	4.53	8.14
	CV	0.61%	0.37%	0.55%
CAPOD Uppsala	mean	1045.2	1233.4	1492.8
	SD	3.56	3.13	5.76
	CV	0.34%	0.25%	0.39%

Table 3.
Difference between mean volumes (ml): Cylinder models.

Method		Model 1	Model 2	Model 3
CAPOD-J	Mathematical calculation	11.3	10.6	−15.5
		(1.49%)	(0.67%)	(−0.44%)
		t=4.90	t=6.04	t=−18.02
		p<0.01	p<0.01	p<0.001
CAPOD-U	Mathematical calculation	9.5	−6.4	−10.7
		(1.25%)	(−0.41%)	(−0.30%)
		t=4.64	t=−1.87	t=−0.42
		p<0.01	N.S.	N.S.
CAPOD-J	Water immersion	15.1	12.9	−10.5
		(1.99%)	(1.07%)	(−0.72%)
		t=3.39	t=3.67	t=−1.32
		p<0.01	p<0.01	N.S.
CAPOD-U	Water immersion	13.3	−4.1	−5.7
		(1.73%)	(0.26%)	(−0.16%)
		t=3.30	t=−0.38	t=−0.76
		p<0.05	N.S.	N.S.

N.S. = Not significant J = Jönköping equipment U = Uppsala equipment

Table 4.
Difference between mean volumes (ml): Stump models.

Method		Model 1	Model 2	Model 3
CAPOD-J	Water immersion	31.0	31.8	31.2
		(3.04%)	(2.65%)	(2.14%)
		t=7.45	t=9.07	t=3.93
		p<0.001	p<0.001	p<0.01
CAPOD-U	Water immersion	25.2	31.2	34.2
		(2.47%)	(2.53%)	(2.29%)
		t=7.42	t=9.39	t=4.56
		p<0.001	p<0.001	p<0.01

J = Jönköping equipment U = Uppsala equipment

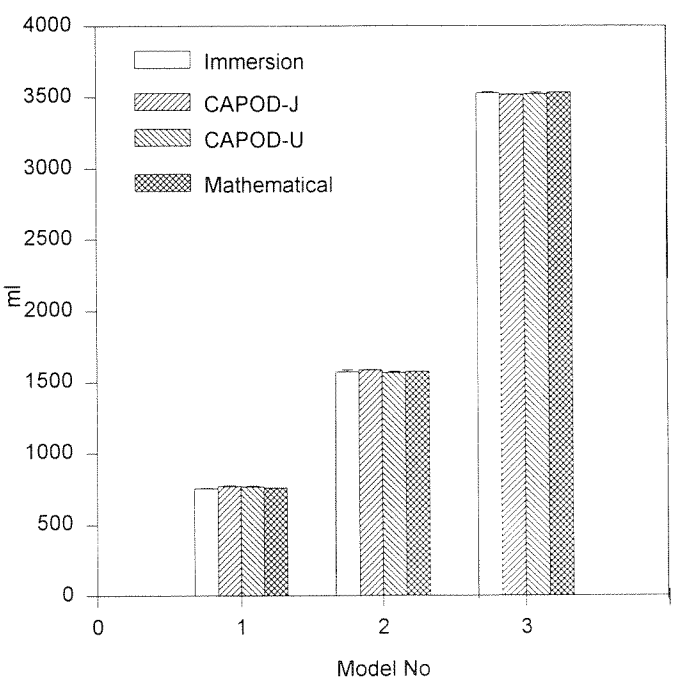

Figure 2.
Diagram showing mean cylinder model volume, measured with four different methods. Error bars indicate the standard deviation.

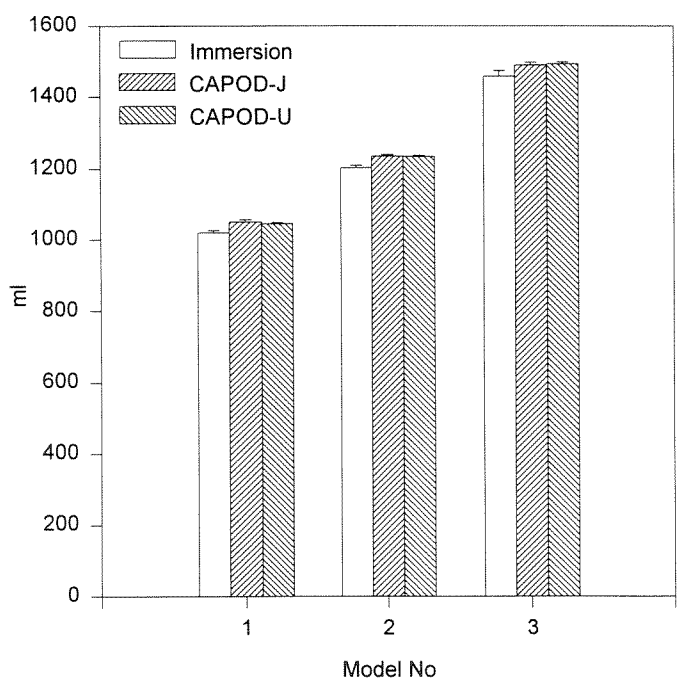

Figure 3.
Diagram showing mean residual limb model volume, measured with three different methods. Error bars indicate the standard deviation.

immersion method is well established since the days of Archimedes, and it was considered free from systematic errors. Thus, the mean of repeated measurements could represent the "true" volume of both cylinders and residual limb models.

For the cylinder models, we found a statistically significant difference between CAPOD measurements and the reference methods only for the smallest model. For the residual limb models, however, we found a systematic error of about +2.5 percent for all models. These results

indicate that the calculation algorithm of the CAPOD system gives a good approximation of the volume for simple, regular objects such as a cylinder, but systematically overestimates the volume of irregular objects such as amputation residual limbs. The difference in the results can be due to methodological differences between measuring the residual limb model and the cylinder model. The error, however, was linear and almost constant throughout the range of measurement, and can easily be corrected for. The CAPOD system has an option for scaling up and down the dimensions of the scanned object.

The reproducibility was good, as represented by the CV, and was less than 0.5 percent (i.e., less than the variation of the water displacement method). Consequently 95 percent of random errors will be included within an interval of ±1 percent. Kofman et al. (4) present two calibration and 3-D reconstruction methods, dependent and independent of camera parameters. They found that their measurements were more than adequate for residual limb-shape measurement and prosthetic fitting. In their study, however, calibration measurements were made on a stepped cylinder with known dimensions. No measurements were performed on a residual limb model or a real residual limb. Thus it is only possible, from their study, to draw conclusions about their test object, not about residual limb models or residual limbs, as measured in the present study.

We want the measurement errors to be as small as possible, but more accuracy and more precision requires greater complexity and cost. If, as was the case in this study, the systematical error is easy to correct for, this should be done, otherwise we must consider whether the error is acceptable or not. The interpretation of the random errors depends on the tolerance and precision that is necessary. Volume changes larger than 1 percent can be detected with the CAPOD system.

Volume determinations are also important as validity tests of the CAD/CAM technique. As one of the ideas was a reduction of errors, it is important that the new technology does not introduce new errors that are larger than the old technique.

In the clinical situation we do not measure standard objects, but living people with residual limbs consisting of soft tissues that can be deformed. Such variations are not related to the CAD/CAM system per se, but must be added on top of the other random errors. Such errors are, however, not the topic of this study.

It is important for users of different measuring devices to control accuracy and precision. This can be done by regular and standardized calibration measurements. The equipment must be checked with reference objects of known form and volume. It is also important to use reference objects that simulate real test objects, such as amputation residual limbs. Such test objects should follow the delivery of CAD/CAM systems, and the calibration procedures must be simple and preferably automatic.

CONCLUSIONS

In the present study, we have examined the accuracy (validity) and precision (reproducibility) of a CAD/CAM system—the Swedish CAPOD system—when used for volumetric determinations. We found a linear, almost constant systematic error of +2.5 percent, which could easily be corrected for, and a small random error, represented by a CV of less than 0.5 percent.

It is important that new technical systems are evaluated with respect to errors of measurement, not only by the manufacturer, but also by independent research groups. To our knowledge, the present study of the CAPOD system is the only one of its kind. We believe that unknown errors of measurement are even more dangerous than known errors, because the latter can often be corrected or compensated for. In our opinion, the systematic error should be corrected for by the built-in possibility to scale the volume up and down. The precision permits detection of changes larger than 1 percent. We consider the precision sufficient for routine clinical practice in prosthetics and orthotics.

REFERENCES

1. Brüssel A. CAD/CAM-technologien in der orthopädietechnik: eine kritische analyse. Orthopädie Technik 1990:41:634–42.
2. Brüssel A. CAD/CAM in prosthetik und orthotik—stand der technik. Orthopädie Technik 1991:42:487–95.
3. Lilja M, Öberg T, Karsznia A. The applications of CAD/CAM technique in prosthetics and orthotics. Biomech Sem 7, 1993:157–62. ISSN 1100-2247.
4. Kofman J, Öberg K, Karlsson A, Lindström B. Comparison of camera-parameter dependent and independent methods of optical scanner calibration and 3-D residual limb-shape reconstruction. In: Proceedings of 7th World Congress of ISPO, 1992:152.
5. Ackoff R. Scientific method: optimizing applied research decisions. New York: Wiley, 1970.
6. Bevington PR, Robinson DK. Data reduction and error analysis for the physical sciences. 2nd ed. New York: McGraw-Hill, 1992:1–51.

7. Strike PW. Statistical methods in laboratory medicine. Oxford: Butterworth-Heinemann, 1991.
8. Barford NC. Experimental measurements: precision, error and truth. 2nd ed. Chichester: Wiley, 1985:85–117.
9. Gellert W, Gottwald S, Hellwich M, Kästner H, Küstner H. Calculus of errors, adjustment of data, approximation theory. In: Gellert, et al. The VNR concise encyclopaedia of mathematics. 2nd ed. New York: Van Nostrand Reinhold, 1989:607–13.
10. Topping J. Errors of observation and their treatment. New York: Chapman & Hall, 1974.
11. Deming WE. Statistical adjustment of data. New York: Dover Publications (Facsimil 1964), 1943:37–48.
12. Öberg T, Lilja M, Johansson T, Karsznia A. Clinical evaluation of below-knee prostesis sockets: a comparison between CAD/CAM made and conventionally made sockets. Prosthet Orthot Int 1993:17:164–71.
13. Öberg K, Kofman J, Karlsson A, Lindström B, Sigblad G. The CAPOD system—a Scandinavian CAD/CAM system for prosthetic sockets. J Prosthet Orthot 1989:1:139–48.
14. Armitage P, Berry G. Statistical methods in medical research. 2nd ed. Oxford: Blackwell, 1987.
15. Fernie GR, Holliday PJ, Lobb RJ. An instrument for monitoring residual limb oedema and shrinkage in amputees. Prosthet Orthot Int 1978:2:69–72.
16. Fernie GR, Holliday PJ. Volume fluctuations in the residual limbs of lower limb amputees. Arch Phys Med Rehabil 1982:63:162–5.
17. Golbranson FL, Wirta RW, Kuncir EJ, Lieber RL, Oishi C. Volume changes occuring in postoperative below-knee residual limbs. J Rehabil Res Dev 1988:25:11–8.