Department of Veterans Affairs

Journal of Rehabilitation Research and Development Vol. 33 No. 1, February 1996
Pages 45–55

CLINICAL REPORT

Life-Cycle Analysis of Depot versus Rehabilitation Manual Wheelchairs

Rory A. Cooper, PhD; Rick N. Robertson, PhD; Brad Lawrence, BS; Tom Heil, BS; Steven J. Albright, BS; David P. VanSickle, MS; Jess Gonzalez, BS

Human Engineering Research Laboratories, Highland Drive Department of Veterans Affairs Medical Center, Pittsburgh, PA 15206; University of Pittsburgh, Pittsburgh, PA 15261; University of Pittsburgh Medical Center, Pittsburgh, PA, 15213-3221

Abstract—The proper selection of a wheelchair requires making several critical decisions, not the least of which is what type of wheelchair is appropriate. The International Organization for Standards (ISO) continues to develop and refine wheelchair standards. Standards allow the objective comparison of products from various sources, permitting consumers or clinicians to assess wheelchairs with which they are not familiar by comparing test results.

This study consisted of three components: 1) the comparison of fatigue test results with a planar ANSI/RESNA test dummy to a HERL contoured test dummy; 2) the comparison of fatigue test results for common depot versus common rehabilitation manual wheelchairs; and 3) the comparison of fatigue test results for manual rehabilitation wheelchairs with solid 8-inch casters versus those with pneumatic 8-inch casters.

Rehabilitation wheelchairs lasted on average 13.2 times longer than the depot wheelchairs. Both types, tested with the standard ISO-ANSI/RESNA dummy, lasted on average 2.1 times longer than those wheelchairs tested using the contoured dummy. The three rehabilitation wheelchairs equipped with 8-inch pneumatic casters lasted on average 3.2 times longer than the 6 rehabilitation wheelchairs equipped with solid 8-inch casters. The depot wheelchairs cost about 3.4 times as much to operate per cycle or per meter than the rehabilitation wheelchairs. The rehabilitation wheelchairs tended to experience component failures, while the depot wheelchairs tended to experience frame failures. Our testing indicates that the tests in the ISO-ANSI/RESNA standards can relate design features to fatigue test results and durability. Rehabilitation wheelchairs tend to use higher quality materials and better manufacturing practices, and they provide greater mobility for wheelchair users. Purchasers and prescribers of wheelchairs should consider the life-cycle cost and not just the purchase price for wheelchairs.

Key words: *cost-analysis, fatigue, purchasing standards, test-dummies, wheelchairs.*

INTRODUCTION

The proper selection of a wheelchair requires making several critical decisions, not the least of which is

This material is based upon work supported by the Department of Veterans Affairs Rehabilitation Research and Development Service, Washington, DC 20420; Paralyzed Veterans of America; National Institute on Disability and Rehabilitation Research through the Rehabilitation Engineering Research Center on Improving Wheelchair Technology; and the U.S. Department of Education, Rehabilitation Service Administration.

All of the authors are affiliated with the Highland Drive Department of Veterans Affairs Medical Center, Pittsburgh, PA; Drs. Cooper and Robertson are additionally affiliated with the Department of Rehabilitation Science and Technology of the University of Pittsburgh and with the Division of Physical Medicine and Rehabilitation, Department of Orthopaedic Surgery, University of Pittsburgh Medical Center. Messrs. Lawrence and Albright are also affiliated with the Department of Rehabilitation Science and Technology of the University of Pittsburgh; Mr. Lawrence is additionally with the Mechanical Engineering Department of that University. Mr. VanSickle is with the Bioengineering Department of the University of Pittsburgh, and Mr. Gonzalez is with the Division of Physical Medicine and Rehabilitation, Department of Orthopaedic Surgery, University of Pittsburgh Medical Center.

Address all correspondence and requests for reprints to: Rory A. Cooper, PhD, Human Engineering Research Laboratories, Highland Drive VA Medical Center, Pittsburgh, PA 15206; email: rcooperpitt.edu.

what type of wheelchair is appropriate (1,2). It is enticing to choose a wheelchair with which one is familiar, or, as is often the case, a wheelchair that is least expensive. As with most things, initial purchase price is only one factor which should be considered. Clinicians understand that function is a very important factor for their patients. Consumers understand that function and reliability are important for their independent mobility. Engineers understand the importance of durability, reliability, and performance. Rehabilitation professionals have espoused the benefits of a team approach to design and assessment for a number of years. Bringing together professionals with a wide variety of perspectives is invaluable. However, these professional teams require valid information in order to make wise decisions (3–8). From a clinical treatment perspective, this has led to the development of outcomes research, and from an engineering perspective, this has led to standards.

The International Organization for Standards (ISO) continues to develop and refine wheelchair standards (9–11). The American National Standards Institute (ANSI) and RESNA are the member organizations for the United States (12,13). Since June 1979, the ANSI/RESNA Wheelchair Standards Committee has produced 18 test procedures on how to perform tests or measurements on wheelchairs (14). The test procedures can be grouped into three categories: performance, safety, and dimensions.

Standards allow the objective comparison of products from various sources. This allows the consumer or clinician to assess wheelchairs with which they are not familiar by comparing test results. The use of standards permits a definition of quality based upon fact and quantitative data to permeate clinical practice rather than a definition based upon opinion and experience (15). While wheelchair manufacturers have conducted evaluations of their own and their competitor's products for nearly 25 years, this information has been virtually inaccessible to the prescriber and consumer (3). More recently, some manufacturers have volunteered some test data for publication in comparison articles (16–18). However, much of this information is difficult to interpret because the reported results are typically similar. While it is comforting to learn that a minimum level of quality is being established through the standards process, it would be more useful to know, for example, which products last longer or require less maintenance.

Some comparison data are available. The National Rehabilitation Hospital in Washington, DC and ECRI gathered some data on rehabilitation technology and published a series of reports (19). Although these reports are helpful, continued effort is required. Several of the wheelchairs tested were unable to meet the requirements for one or more of the 18 ANSI/RESNA standards. Ten electric powered wheelchairs were fatigue tested using ANSI/RESNA procedures. Using 200,000 double-drum cycles and 6,666 curb-drop drops as the test criteria, 2 of the 10 wheelchairs failed. The weld attaching the battery support frame to the wheelchair frame broke on the E&J Tempest after 203,135 double-drum cycles, and 3,335 curb-drop drops. The welds on the seat frame broke on the Permobil Max 90 after 102,597 double-drum cycles and 3,414 curb-drop drops. Testing was stopped when the criteria were met; therefore, the number of cycles to Class III failure are unknown for the remaining wheelchairs. Several power wheelchair manufacturers did not participate in this study.

The Paralyzed Veterans of America publishes a list of wheelchairs and their ANSI/RESNA standards test results provided by the wheelchair manufacturers (14,16–18). Listing test results is optional, but the information contained in the articles is useful for comparing various wheelchairs. Most of the results reported in these articles use the 200,000 double-drum and 6,666 curb-drop cycles required by the proposed ISO standard for wheelchair fatigue testing. This makes comparison of durability difficult, because manufacturers either report the level proposed by the ISO standard or provide no test results at all.

Wheelchair test laboratories have existed in Europe for several years, and many countries have minimum performance standards that all wheelchairs must exceed (20–22). However, there has been no common test method for determining fatigue life. Some countries have used obstacles attached to the belts of treadmills, some various obstacles attached to rollers, some eccentric rollers, some obstacles mounted to the floor and the chair pulled by a carousel, and others have used chairs pulled over a linear test track. Therefore, comparison data have not been reported. Moreover, most countries, including those in Europe, are adopting ISO 7176 Wheelchair Testing standards which define using a double-drum tester and curb-drop tester for fatigue testing. Hence, there is little motivation for developing comparison methods for the non-ISO standard fatigue tests being phased out. In the future, standardized testing methods and equipment should provide useful comparison data from test laboratories around the

world. Some useful data on properties of wheelchairs are included in published reports sponsored by the European Community (23,24). European Community standards will be established as of January 1996, which should help to produce a database of wheelchairs that meet the minimum performance standards (25).

Several research groups have investigated means of modeling wheelchairs and wheelchair fatigue (26–30). Fatigue of a wheelchair is a complex process. The only reliable means of predicting the fatigue life of a wheelchair is currently to perform fatigue testing. Baldwin, et al. have examined modeling methods for strain along components of wheelchair structures (31–36). Hekstra, et al. have examined modeling of occupant loads (22,25). VanSickle, et al. have examined the transmission of road loads through the wheelchair (37). The work of these engineers is building the foundation for the systematic improvement of wheelchair durability, reliability, and comfort.

This study focused on two aspects of the standards: test dummies and fatigue testing. Most wheelchair testing is conducted with the wheelchair loaded with a dummy (9,13). The design of the dummy may affect the results of testing (38,39). The dummy must be realistic enough to produce meaningful results, but it must also yield consistent test results. Fatigue testing is used to provide an objective measure of the durability of the wheelchair and its components. Durability is assessed by subjecting the loaded wheelchair to a large number of low level stresses, similar to the stresses endured by a wheelchair during daily use (9,13).

METHODS

This study consisted of three components: 1) the comparison of fatigue test results for a planar ANSI/RESNA test dummy versus a contoured HERL test dummy (**Figure 1**); 2) the comparison of fatigue test results for common depot versus common rehabilitation manual wheelchairs; and 3) the comparison of fatigue test results for manual rehabilitation wheelchairs with solid 8-inch casters versus pneumatic 8-inch casters. A depot wheelchair was defined as a manual wheelchair designed for hospital or institutional use (i.e., generic wheelchair). A rehabilitation wheelchair was defined as a manual wheelchair designed for an individual's use as a long-term mobility aid. Fifteen manual wheelchairs (six depot wheelchairs and nine rehabilitation wheelchairs with identical dimensions), commonly purchased

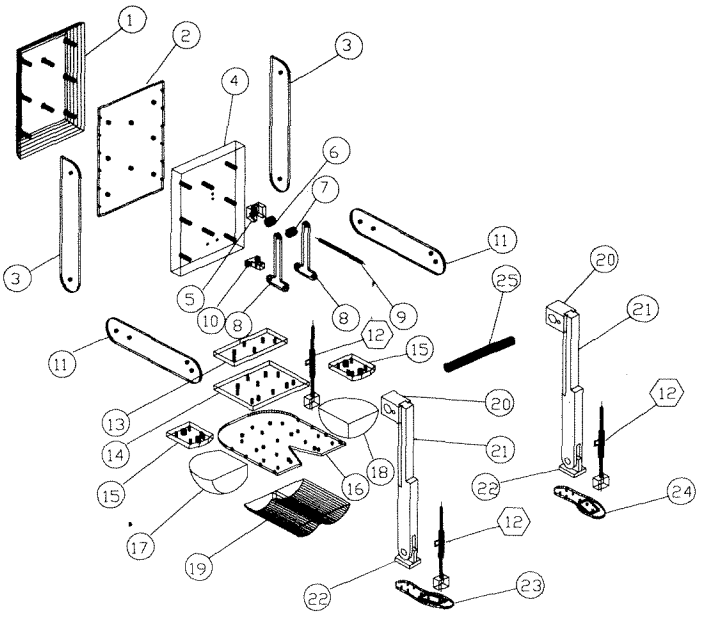

Figure 1.
Blow-up view of HERL contoured wheelchair test dummy.

by the VA and other third party providers, were tested using ANSI/RESNA double-drum and curb-drop testers (9,13,40). All of the wheelchairs were folding models. The depot wheelchairs were placed on a double-drum tester for 10,000 cycles and then moved to a curb-drop tester for 350 drops. This process was repeated in sets of 10,000 and 350 until the wheelchair either broke or was permanently deformed. Similarly, the rehabilitation wheelchairs were placed on a double-drum tester for 100,000 cycles and 3,500 drops for a curb-drop tester. Previous experience with these types of chairs led us to choose the number of cycles in each set, so that both types of chairs would experience about the same percentage of double-drum and curb-drop equivalent cycles during their lifetime (41). Testing was terminated after a Class III failure or 2.05 million equivalent cycles. The following formula was used to compute the number of equivalent cycles:

$$\text{Total Cycles} = (\text{Double-Drum Tester Cycles}) + 30\cdot(\text{Curb-Drop Tester Drops})$$

This equation is based upon the ratio for double-drum cycles and curb-drop drops in ANSI/RESNA Wheelchair Standard, Part 08 (13,14). All chairs were loaded with 100 kg test dummies (13,14). The critical characteristics of the wheelchairs are presented in **Table 1.** All of the wheelchairs were made to the same dimensional specifications. These dimensions were chosen as they

Table 1.
Critical characteristics of test wheelchairs.

Class	Back Height	Seat Depth	Seat Width	Frame Tubing	Legrest Type	Tire	Rear Wheel Size	Rear Wheel Type	Caster Wheel Size	Caster Wheel Tire
Rehab 1	18 in	16 in	16 in	Alum.	S-A	Air	24 in	Mag	8 in	Solid
Rehab 2	18 in	16 in	16 in	Alum.	S-A	Air	24 in	Mag	8 in	Solid
Rehab 3	18 in	16 in	16 in	Alum.	S-A	Air	24 in	Mag	8 in	Solid
Rehab 4	18 in	16 in	16 in	Alum.	S-A	Air	24 in	Mag	8 in	Solid
Rehab 5	18 in	16 in	16 in	Alum.	S-A	Air	24 in	Mag	8 in	Solid
Rehab 6	18 in	16 in	16 in	Alum.	S-A	Air	24 in	Mag	8 in	Solid
Rehab 7	18 in	16 in	16 in	Alum.	S-A	Air	24 in	Mag	8 in	Air
Rehab 8	18 in	16 in	16 in	Alum.	S-A	Air	24 in	Mag	8 in	Air
Rehab 9	18 in	16 in	16 in	Alum.	S-A	Air	24 in	Mag	8 in	Air
Depot 1	18 in	16 in	16 in	Steel	S-A	Solid	24 in	Mag	8 in	Solid
Depot 2	18 in	16 in	16 in	Steel	S-A	Solid	24 in	Mag	8 in	Solid
Depot 3	18 in	16 in	16 in	Steel	S-A	Solid	24 in	Mag	8 in	Solid
Depot 4	18 in	16 in	16 in	Steel	S-A	Solid	24 in	Mag	8 in	Solid
Depot 5	18 in	16 in	16 in	Steel	S-A	Solid	24 in	Mag	8 in	Solid
Depot 6	18 in	16 in	16 in	Steel	S-A	Solid	24 in	Mag	8 in	Solid

NOTE: S-A = swing away legrest, Air = pneumatic tire with tube, Mag = plastic wheel and spokes.

represent the most commonly purchased size as reported by the manufacturers. Dimensions were verified prior to testing using an ANSI/RESNA reference loader gage (13,14). All wheelchairs of a like kind used identical components. Rated tire pressure was maintained for all pneumatic tires throughout the testing.

Each depot wheelchair was made of non-heat-treated AISI 1020 steel and weighed approximately 38 lbs (17.1 kg), while each rehabilitation wheelchair was made of SAE 6061-T6 aluminum and weighed about 27 lbs (12.15 kg) with all components and accessories. The steel frames were welded using furnace brazing methods; the aluminum wheelchairs were welded using tungsten inert gas (TIG) methods. None of the wheelchair frames were heat treated post welding. All caster spindles were SAE grade 5 material, 12 mm (1/2 inch) in cross-sectional diameter, and approximately the same length (see **Figure 2C**). Critical dimensions of the failures are presented in **Figures 2** and **3.** The suggested retail price, provided by the manufacturers, for each depot wheelchair was about $450, while the suggested retail price for each rehabilitation wheelchair was about $1,700. All wheelchairs began testing on a double-drum tester and then were moved to a curb-drop tester. Three of the rehabilitation wheelchairs (with solid caster tires) were tested with the planar dummy, the remainder were tested with the HERL contoured dummy. Three of the depot wheelchairs were tested with the planar dummy and three with the contoured dummy. The order in which the wheelchairs were tested and dummies used was randomized. The standard 100 kg dummy is a version of the ANSI/ISO Wheelchair Test Dummy called out in part WC-11 of the ANSI/RESNA standards (13,14). The 100 kg HERL contoured dummy has been described previously in the literature (38,39) and is shown in **Figure 1.**

Multiple analysis of variance (MANOVA) and analysis of variance (ANOVA) with levels of significance of $p \leq 0.05$ were used to test four hypothesis:

1. The total equivalent number of cycles would be significantly different for the two types of wheelchairs (i.e., rehabilitation versus depot).
2. The total equivalent number of cycles would be significantly different for the two types of dummies (i.e., planar versus contoured).
3. The total equivalent number of cycles would be significantly different for the rehabilitation wheelchairs equipped with pneumatic front casters versus solid front casters.
4. The cost per total equivalent cycle would be significantly different for the two types of wheelchairs (i.e., rehabilitation versus depot).

Scheffe's post hoc analysis was used to determine significant interactions. The small sample and cell sizes are clearly limitations to the statistical analyses. How-

ever, the cells are balanced, and this is the largest study of its kind involving wheelchairs. The use of MANOVA and ANOVA implies the assumption that the number of total cycles to failure can be represented by a normal distribution or bell curve. All tests were performed by thoroughly trained and experienced wheelchair testing engineers.

RESULTS

The number of cycles completed on a double-drum test machine and the number of curb-drop tester drops are related. Therefore, only the total cycles were used for comparison. The results of testing for each wheelchair are presented in **Table 2.**

Means and standard deviations for the double-drum cycles, curb-drop drops, and total cycles are presented in **Table 3.** The rehabilitation wheelchairs lasted on average 13.2 times longer than the depot wheelchairs. The wheelchairs, both depot and rehabilitation, tested with the standard ISO-ANSI/RESNA dummy lasted on average 2.1 times longer than those wheelchairs tested using the contoured dummy. ANOVA revealed that the total cycles before Class III failure were significantly greater ($F=31.41$, $p=0.0005$) for the rehabilitation

Table 2.
Results of wheelchair fatigue testing.

Classification	Dummy Type	Double Drum	Curb Drop	Total Cycles	Failure
Rehab 1	Standard	400,000	10,890	726,700	Footrest
Rehab 2	Contour	300,000	9,060	571,800	Cross Brace
Rehab 3	Standard	610,000	21,060	1,241,800	Caster Spindle
Rehab 4	Contour	100,000	2,291	168,730	Footrest
Rehab 5	Standard	400,000	10,500	715,000	Caster Spindle
Rehab 6	Contour	253,733	7,000	463,733	Caster Spindle
Rehab 7	Contour	1,000,000	35,000	2,050,000	None
Rehab 8	Contour	1,000,000	35,000	2,050,000	None
Rehab 9	Contour	1,000,000	35,000	2,050,000	None
Depot 1	Contour	13,175	350	23,675	Caster Mount
Depot 2	Standard	59,785	1,750	112,285	Side Frame
Depot 3	Contour	19,676	350	30,176	Side Frame
Depot 4	Standard	20,002	350	30,502	Side Frame
Depot 5	Contour	40,001	1,050	71,501	Caster Mount
Depot 6	Standard	15,129	350	25,629	Caster mount

NOTE: Total Cycles = (Two-Drum Tester Revolutions) + 30·(Curb-Drop Tester Drops)

Table 3.
Results of fatigue testing by wheelchair type, dummy type, and caster tire type (mean ± standard deviation).

	Wheelchair Type		Dummy Type		Rehabilitation Wheelchairs Caster Tire Type	
	Rehab.*	Depot	Contoured*	Standard	Pneumatic	Solid
Double Drum	343,960	27,961	121,100	250,820	1,000,000	343,960
	±171,260	±18,292	±125,340	±252,520	±0	±171,260
Curb-Drop	10,134	700	3,350	7,483	35,000	10,134
	±6,206	±586	±3,750	±8,242	±0	±6,206
Total Cycles	647,960	48,961	221,600	475,320	2,050,000	647,960
	±355,740	±35,764	±237,660	±498,000	±0	±355,740

*NOTE: Only rehabilitation wheelchairs with solid casters were used in these calculations.

wheelchairs than for the depot wheelchairs. ANOVA also revealed that the total cycles before Class III failure were significantly higher (F=5.63, p=0.045) for the standard dummy than for the contoured dummy. There were no significant interactions (p>0.05).

The three rehabilitation wheelchairs equipped with 8-inch pneumatic casters lasted on average 3.2 times longer than the six rehabilitation wheelchairs equipped with solid 8-inch casters. ANOVA showed the pneumatic casters to cause a significant increase (F=43.49, p=0.0003) in fatigue life.

When evaluating wheelchairs, the initial purchase price can be misleading. Therefore, the suggested retail price for each wheelchair was divided by the total number of cycles until a Class III failure occurred to yield the dollars per equivalent cycle. **Table 4** presents the results of our analysis of cost to first Class III failure, giving a simple measure of how much it costs to operate a wheelchair until it needs to be replaced (i.e., the wheelchair has some retail value when new and no value once destroyed). The depot wheelchairs cost about 3.4 times as much to operate per cycle or per meter as did the rehabilitation wheelchairs. ANOVA showed that the costs per cycle were significantly higher (F=10.06, p=0.01) for the depot wheelchairs than for rehabilitation wheelchairs. The 6 rehabilitation wheelchairs equipped with solid 8-inch casters cost 3.2 times as much per cycle as did the 3 identical rehabilitation wheelchairs with pneumatic 8-inch casters. The effect of tire costs is insignificant in this analysis as only one chair, Rehab 6, experienced a leak in the tube of a front caster tire at a cost of less than $5.00 for repair. No other repairs were performed. ANOVA revealed that costs per cycle were significantly higher (F=43.49, p=0.0003) for the rehabilitation wheelchairs equipped with solid casters than for the rehabilitation wheelchairs equipped with pneumatic casters.

DISCUSSION

Proposed ISO static, impact, and fatigue strength testing standards require wheelchairs to complete 200,000 double-drum cycles followed by 6,666 curb-drop tester drops without a failure (9,19). This is equivalent to about 159 km (100 miles) of moderately rough terrain. We have tested approximately 50 wheelchairs to ISO-ANSI/RESNA standards. Much to our dismay, a disproportionate number of these wheelchairs fail prematurely (19,41). The results of this study confirm the results of previous studies, in that wheelchairs designed using quantitative test data exceed ANSI/RESNA-ISO requirements. A substantial number of popular rehabilitation wheelchairs fall into this category. Seven of the 15 wheelchairs tested experienced a Class III failure prior to completing 200,000 double-drum cycles. Six of the failed wheelchairs were of the depot type. Recently, we tested a similar depot wheelchair commonly purchased by the VA and other hospital systems for use on patient wards. The wheelchair was placed on our curb-drop tester, without prior double-drum testing, and the frame permanently deformed within 10 drops, when it should have exceeded 6,666 drops before failing. The results of this study, combined with previous fatigue studies, clearly illustrate that there may be problems with wheelchair purchasing strategies (i.e., it may be more cost effective for the agency and more beneficial for patients if large institutions purchased rehabilitation wheelchairs instead of the depot type). If an international group of experts in wheelchair design, testing, use, and manufacture can agree that a wheelchair, manual (depot or rehabilitation) or electric powered, must withstand 200,000 cycles on a double-drum tester, and a substantial number of wheel chairs do not meet that standard, then there is need for change. The standards proposed by the experts who

Table 4.
Dollars per equivalent (i.e. combined double-drum and curb-drop) cycle during fatigue tests.

	Wheelchair Type		Rehabilitation Wheelchairs Caster Tire Type	
	Rehabilitation* (N=6)	Depot (N=6)	Pneumatic (N=3)	Solid (N=6)
Dollars per cycle	0.0038 ±0.0032	0.0128 ±0.0061	0.0008 ±0.0000	0.0038 ±0.0032

*NOTE: Only rehabilitation wheelchairs with solid casters were used in these calculations.

make up the ISO wheelchair standards committee have only set the fatigue life prior to failure of a key component at about 159 km (9,14,19). Albeit, these are 159 km of rough road, but most people would think twice before buying a car that only lasted 1590 km before needing to be replaced (a compact automobile costs about 10 times the cost of a manual rehabilitation wheelchair; for one-tenth the cost most people would expect at least one-tenth the fatigue life). We agree that these arguments are simplistic, and that numerous other factors affect the quality and cost of wheelchairs.

Pressures experienced by clinicians from cost-conscious third-party payers have changed the face of the wheelchair marketplace (1,3,5,18). Manufacturers are producing, and more consumers are receiving, depot wheelchairs designed to meet cost constraints imposed by third-party payers. Some of these wheelchairs may be appropriate for some consumers, while others clearly are not. An interesting result of this study is the fact that ANOVA revealed that rehabilitation wheelchairs lasted significantly ($p<0.05$) longer than depot wheelchairs. Perhaps more important to the VA, other third-party providers, clinicians, and consumers is that rehabilitation wheelchairs cost approximately 4 times more than depot wheelchairs yet last more than 10 times longer on average. This indicates that it may be more cost effective for the VA and other hospital systems to purchase rehabilitation wheelchairs and not depot wheelchairs, as is the current practice in hospital use and some community use. Rehabilitation wheelchairs are certainly more appropriate and cost effective for people who are moderately active.

We were intrigued to discover that the simple change from a solid front caster to a pneumatic front caster would have such a dramatic effect on fatigue life. This simple change extended the wheelchair life by over three times without a significant increase in cost (i.e., the increase in cost was a total of about $5 amortized over three wheelchairs). This result is particularly timely in light of the current trend by rehabilitation professionals to order manual wheelchairs with solid casters in order to reduce maintenance expenses.

The contoured dummy was developed in an effort to obtain results during fatigue testing which were more comparable to actual consumer use. The approved ISO-ANSI/RESNA test dummy has squared edges and planar seat and backrest surfaces (13,14). The contoured dummy has seat and back surfaces which are based on human anthropometry (39). A component of this study was to investigate whether the fatigue test results for the two dummies would differ. We had supposed that the standard dummy was masking failures because of its unrealistic means of loading the wheelchair (39). The fatigue test results indicate that the wheelchairs fail significantly quicker with a contoured dummy than a standard planar dummy. Further testing is required to determine which dummy provides the more realistic loading scheme when compared to actual wheelchair users.

Examination of **Table 2** reveals that the rehabilitation wheelchairs tended to experience component failures (see **Figure 2**), whereas the depot wheelchairs tended to experience frame failures (see **Figure 3**). Our testing indicates that the tests in the ISO-ANSI/RESNA standards can relate design features to fatigue test results and durability (i.e., differences were seen between depot and rehabilitation wheelchairs which are two distinctly different designs).

Six of the nine rehabilitation wheelchairs experienced Class III failures, while three successfully completed 2.05 million equivalent cycles (these three all had

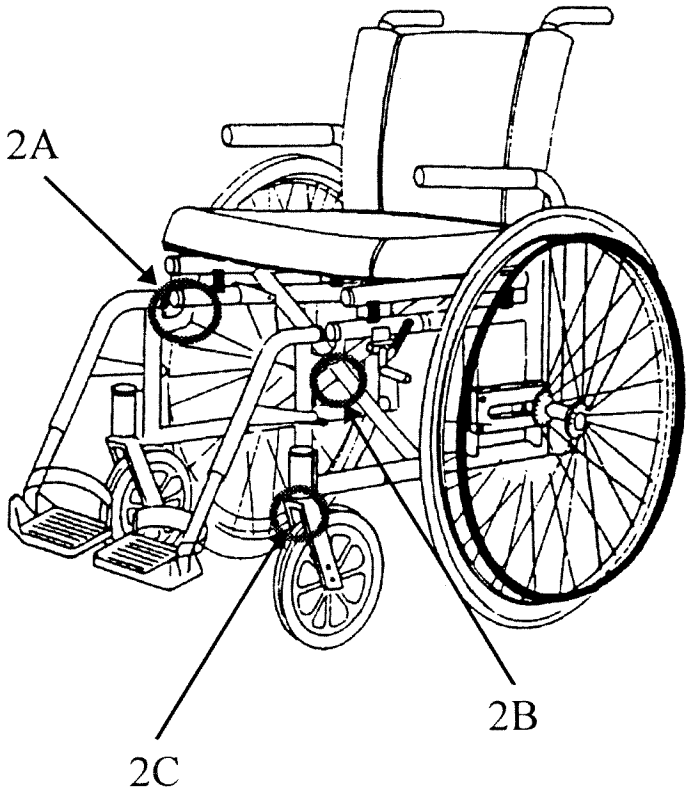

Figure 2.
Illustration of failures occurring on rehabilitation wheelchairs during fatigue testing. Circles mark areas where breakage occurred.

Journal of Rehabilitation Research and Development Vol.33 No. 1 1996

pneumatic caster tires). Rehab 1 and Rehab 4 failed at the front right welds of the junction where the footrests connect to the vertical side tubes (see **Figure 2a**). The frame members may not have been properly preheated before welding and/or the joint may not have cooled slowly enough to prevent thermal expansion and stresses. Rehab 2 failed due to the cross brace fracturing on the rear bottom side next to the bolt location (see **Figure 2b**). Increasing the material thickness or cross-sectional area would increase its strength and fatigue life. Incorporating a bolt insert could also increase fatigue life, since the fracture originated at the bolt hole. Rehab 3, Rehab 5, and Rehab 6 failed due to the right caster spindle bolts shearing off (see **Figure 2c**). These failures occurred at the bolt-thread junction due to the cyclic fatigue of the caster striking the ground. Using a thicker stem bolt or possibly using a higher grade bolt (SAE grade 5 was used for these tests) could increase the spindle bolt's fatigue life. Rehab 7, Rehab 8, and Rehab 9 did not suffer any Class III failures. Rehabilitation wheelchairs tend to use higher quality materials and better manufacturing practices, and to provide greater mobility for wheelchair users.

All six depot wheelchairs experienced Class III failures during our testing. Depot 1 failed when the right front plastic caster spokes fractured. The spokes were made from non-reinforced polyvinylchloride (PVC) plastic that lacked suitable durability. Depot 5 and Depot 6 experienced frame failures at the left front side weld vent holes located 12 mm (1/2 inch) behind the caster housing joint with the side frame (see **Figure 3a**). Stress concentrations built up at the vent holes and propagated through the frame tubing: redesign of this frame member should exclude or relocate the vent holes. Depot 2 and Depot 3 failed at the right upper side horizontal tube weld at the junction of the side frame and the backrest tube (i.e., cane), and Depot 4 failed at both side tube welds at the junction of the side frame and backrest tubes, see (**Figure 3b**). Corrosion in the metal of the furnace-brazed welds could have caused the failure, as could the improper heating and cooling of the welds and the frame member.

Rehab 3, Rehab 5, and Rehab 6 wheelchairs could have been repaired by replacing the caster spindles. Our investigation was based upon number of cycles to first class III failure as defined in the ANSI/RESNA Wheelchair Standards. Failure of a caster spindle, although

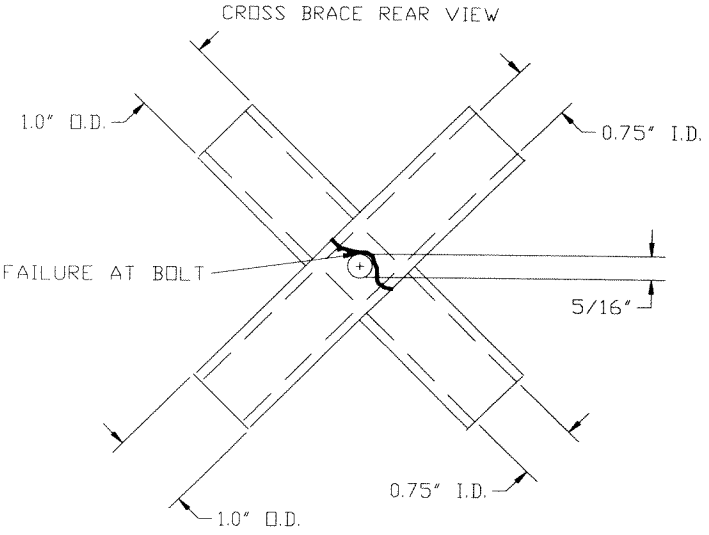

Figure 2b.
Detail of Figure 2. Failure at cross brace bolt.

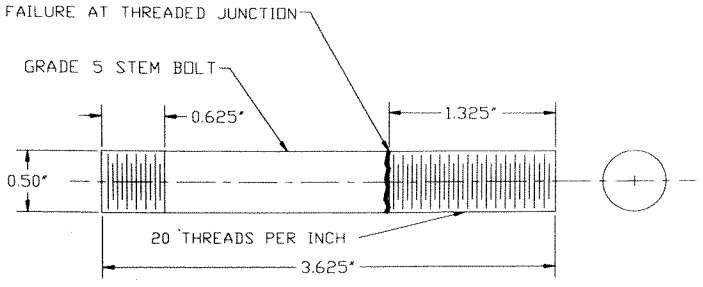

Figure 2c.
Detail of Figure 2. Failure of stem bolt.

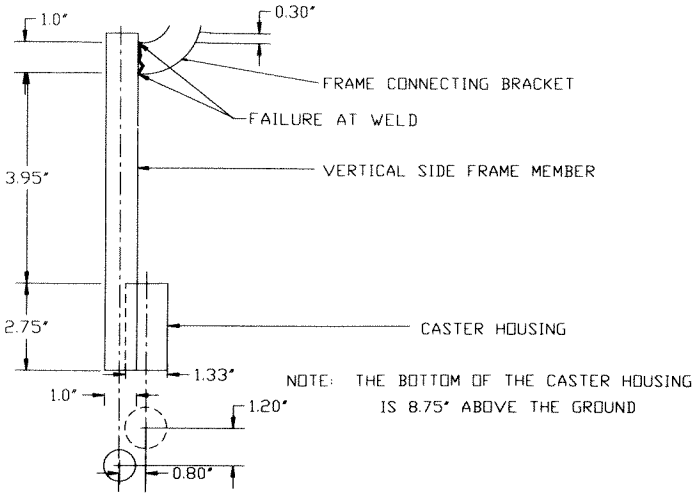

Figure 2a.
Detail of Figure 2. Failure at footrest weld.

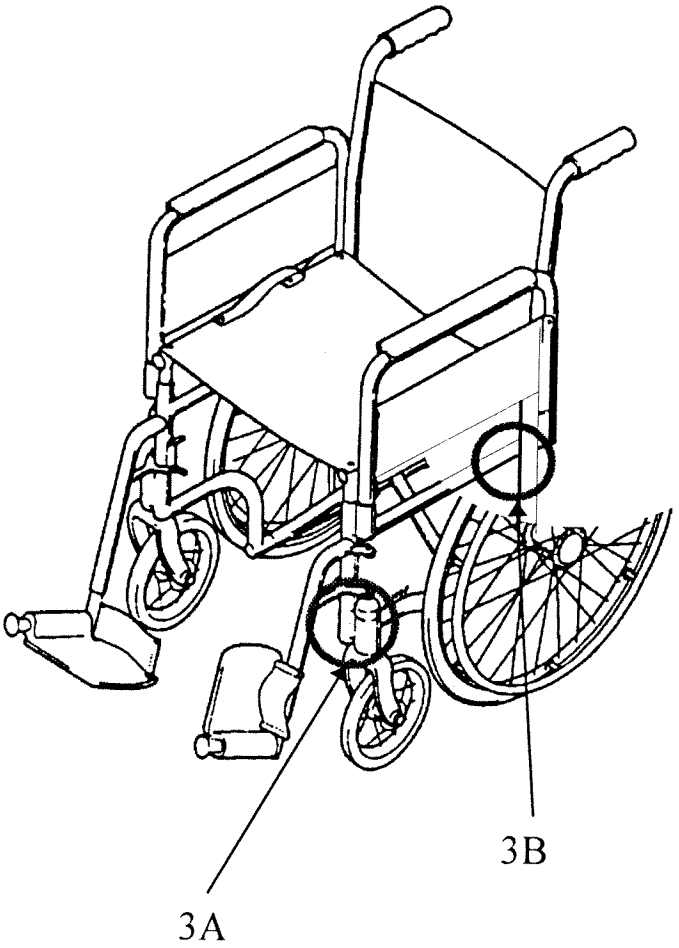

Figure 3.
Illustration of failures occurring on depot wheelchairs during fatigue testing. Circles mark areas where breakage occurred.

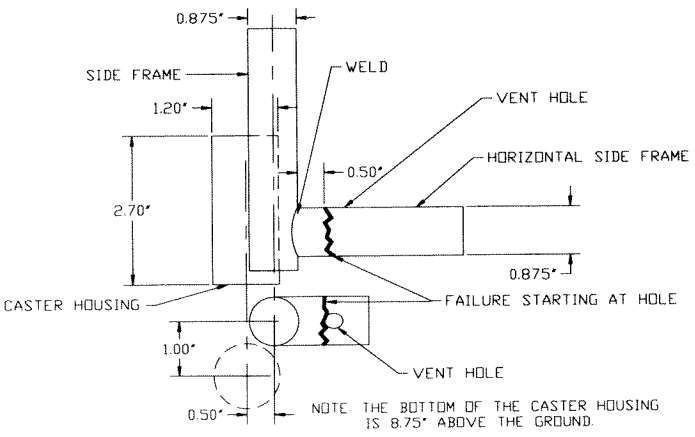

Figure 3a.
Detail of Figure 3. Failure of side frame near footrest weld.

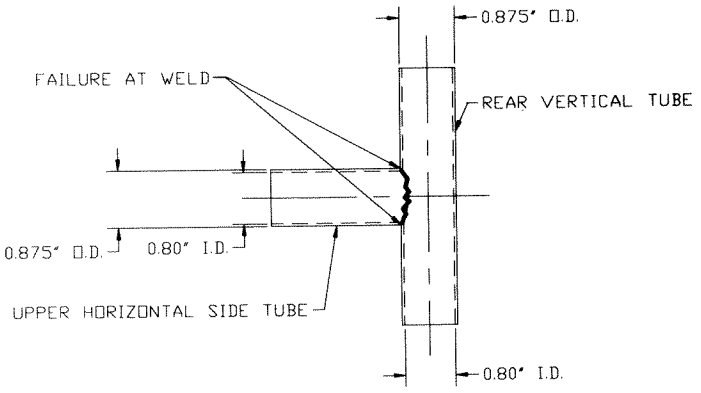

Figure 3b.
Detail of Figure 3. Failure at side and rear vertical frame members.

repairable, is a Class III failure. Therefore, testing was terminated upon detection of a caster spindle failure, as it was with other Class III failures. All of the wheelchairs could have been repaired if given appropriate technical assistance and materials (broken welds could have been re-welded, frame breakages could have been reinforced and welded, spindles could be replaced). In the case of the depot wheelchairs, cost of repair would likely exceed cost of replacement. The ANSI/RESNA definition of a Class III failure was applied during this study to provide consistent and comparable data.

The quality of manual wheelchairs varies from manufacturer to manufacturer and within the models produced by each manufacturer (14,16,17,19,41). Initial purchase price is only one factor to consider when selecting a wheelchair. Quality must be defined from a user, clinical, and engineering perspective. Purchasers and prescribers of wheelchairs should consider the life-cycle cost and not just the purchase price for wheelchairs (42). This study did not examine clinical factors related to the two styles of wheelchairs (e.g., adjustability, postural support, and maneuverability). Clinical factors are important and need to be addressed in future work. The ISO-ANSI/RESNA standards do provide useful information and can be used to assure a minimum quality level. It should be a goal of all people intimately involved with wheelchairs to understand and apply wheelchair standards and to work toward a quality definition. One step toward this process is to systematically investigate the effect of wheelchair components and design features on durability. Another step is to investigate user perceptions of rider comfort and how these perceptions are related to wheelchair

design. Eventually, comprehensive selection guidelines could be developed which incorporate product evaluation information.

ACKNOWLEDGMENTS

The authors would like to thank several people for providing technical assistance during this study: Ken Stewart, Margaret Flannery, Greg Ensminger, Jim Ster, Gideon Reifman, and Craig Myren.

REFERENCES

1. Cooper RA, Brienza DM, Brubaker CE. Wheelchairs and seating. Curr Opin Orthop 1994:5(6):101–7.
2. Cooper RA. High tech wheelchairs gain the competitive edge. IEEE Eng Med Biol Mag 1991:10(4):49–55.
3. McFarland SR. Seeking information about wheelchair evaluation: a call for action, choosing a wheelchair system. J Rehabil Res Dev 1990:Clin Suppl 2:86–7.
4. McLaurin CA. Wheelchair development, standards, progress, and issues: a discussion with Colin McLaurin, Sc.D. J Rehabil Res Dev 1986:23(2):48–51.
5. Pronsati MP. Standardization will bring better products to wheelchair consumers. Adv Phys Ther 1991:2(36):22–3.
6. Axelson P, Phillips L. Wheelchair standards: pushing for a new era. Homecare Mag 1989:11:141–7.
7. Axelson P, Wood Z. Wheelchair standards and you. Paraplegia News 1992:46(10):54–5.
8. Horn J. U.S. committee adopts wheelchair standards. Phys Ther Bull 1991:6(6):4,34.
9. International Standards Organization (ISO). Committee draft ISO/CD 7176-8(E) Wheelchairs—Part 8: requirements and test methods for static, impact, and fatigue strength. Technical Committee 173, Sub-Committee 1, N 200, Zurich, Switzerland, December 1994.
10. Marlowe DE. Assessing wheelchair performance: the role of regulations and standards. In: Wheelchair IV: report of a conference on the state-of-the-art of powered wheelchair mobility. In: Proceedings of ICAART 88. Washington, DC: RESNA Press, 1988:61–3.
11. Bryant L. Wheelchair standards ready to roll. Team Rehab Rep 1991:May/June:44–5.
12. McLaurin CA, Axelson P. Wheelchair standards: an overview, choosing a wheelchair system. J Rehabil Res Dev 1990:Clin Suppl 2:100–3.
13. Wheelchair standards. Washington, DC: RESNA Press, 1994.
14. Axelson P, Minkel J, Chesney D. A guide to wheelchair selection: how to use the ANSI/RESNA wheelchair standards to buy a wheelchair. Washington, DC: Paralyzed Veterans of America, 1994.
15. Schnoll L. The ISO 9000 Series: Worldwide standards for quality. Med Des Mater 1991:2:36–40.
16. Axelson P. Chairs, chairs, everywhere! Sports 'n Spokes 1994:19(6):15–63.
17. Axelson P. Wheelchair comparison. Sports 'n Spokes 1993:18(6):34–70.
18. Axelson P, Chesney D, Goodman S. Lightweight choice. Mainstream 1994:18:22–3.
19. Barnicle K. Evaluating powered wheelchairs. REquest evaluating assistive technology. The Rehabilitation Engineering Center at The National Rehabilitation Hospital, May, 1993.
20. Mauger-Cote D, Audet J, Nolet J. Wheelchair emergency repair services. In: Proceedings of the Second European Conference on the Advancement of Rehabilitation; 1993 May; Stockholm Sweden, 5.3.
21. Klinger C. Pruefplaene fuer die programmierbare rollende strasse. Technische Universitaet Berlin: Technical Report, September, 1991.
22. Hekstra A. Simulation models for test evaluation and product development of wheelchair. In: Proceedings of the Second European Conference on the Advancement of Rehabilitation; 1993 May; Stockholm Sweden, 3.3.
23. Johnson I, Andrich R. European report on wheelchair testing. Commission of the European Communities (COMAC BME), Mobility restoration for paralyzed persons. Milano: Edizioni Pro Juventute, 1991.
24. Roebroeck ME, Van Der Woude LHV, Rozendal RH. Methodology of consumer evaluation of hand propelled wheelchairs. In: Commission of the European Communities (COMAC BME), Evaluation of assistive devices for paralysed persons. Milano: Edizioni Pro Juventute, 1987.
25. Hekstra AC. Human factors in wheelchair testing. In: Proceedings of Workshop "Ergonomics of manual wheelchair propulsion: state of the art." Amsterdam: Vrije University, 1991:25–35.
26. Tam EWC, Chiu EYM, Evans JH. Using ISO standards for manual wheelchair testing: the Hong Kong experience. In: Proceedings of RESNA International '92; Toronto, ON. Washington, DC: RESNA Press, 1992:625–6.
27. Thacker JG, Todd BA, Disher TD. Stress analysis of wheelchair frames. In: Proceedings of the 8th Annual RESNA Conference; 1985, Memphis, TN. Washington, DC: RESNA Press, 1985:84–6.
28. Kauzlarich JJ, Thacker JG. Wheelchair tire rolling resistance and fatigue. J Rehabil Res Dev 1985:22(3):25–41.
29. Vanderby R, Patwardhan AG. A CAD approach for optimal design of a wheelchair frame: a preliminary report. In: Proceedings of the 6th Annual Conference on Rehabilitation Engineering. San Diego, CA, 1983:115–7.
30. Thacker JG, Gorman SF, Todd BA. Evaluation of rider comfort with front caster suspension. In: Proceedings of the 8th Annual RESNA Conference; 1985, Memphis, TN. Washington, DC: RESNA Press, 1985:87–9.
31. Baldwin JD, Thacker JG. Stress response of wheelchair frames to front caster impact. In: Proceedings of the 16th Annual RESNA Conference; 1993, Las Vegas, NV. Washington, DC: RESNA Press, 1993:321–3.
32. Baldwin JD, Dee LS, Thacker JG. Dynamic structural response of a cross-tube wheelchair frame. In: Proceedings of RESNA International '92; Toronto, ON. Washington, DC: RESNA Press, 1992:622–3.
33. Baldwin JD, Thacker JG, Baber TT, Aylor JH. In: Simulation of a random fatigue process applied to wheelchair structures.

In: proceedings of the 13th Annual RESNA Conference; 1990 Washington, DC. Washington, DC: RESNA Press, 1990:63–4.

34. Baldwin JD, Thacker JG. Structural reliability techniques applied to tubular wheelchair frames. In: Proceedings of the 14th Annual RESNA Conference; 1991, Kansas City, MO. Washington, DC: RESNA Press, 1991:237–9.
35. Baldwin JD, Thacker JG, Baber TT. Estimation of structural reliability under random fatigue conditions. Service TH, ed. Reliability, Stress Analysis and Failure Prevention. New York: American Society of Mechanical Engineers, 1991:43–8.
36. Baldwin JD, Thacker JG. Characterization of the dynamic stress response of manual and powered wheelchair frames. J Rehabil Res Dev 1993:30(2):224–32.
37. VanSickle DP, Cooper RA, Robertson RN. A 2-dimensional wheelchair dynamic load history using accelerometers. In: Proceedings of the 16th Annual RESNA Conference; 1993, Las Vegas, NV. Washington, DC: RESNA Press, 1993:324–6.
38. Cooper RA, Ster JF, Myren C, Pettit DJ. An improved design of a 100 kilogram ISO/RESNA wheelchair test dummy. In: Proceedings of RESNA International '92; Toronto, ON. Washington, DC: RESNA Press, 1992:210–2.
39. Cooper RA, Myren C, Ster JF, et al. Design of an anthropomorphic ISO-RESNA/ANSI wheelchair test dummy. In: Proceedings of the 16th Annual RESNA Conference; 1993, Las Vegas, NV. Washington, DC: RESNA Press, 1993:283–5.
40. Cooper RA, Ster JF, Heil TA. Development of a new ISO wheelchair two-drum tester. In: Proceedings of the 13th Annual IEEE/EMBS International Conference; 1991, Orlando, FL. 1991:13:1867–8.
41. Cooper RA, Stewart KJ, VanSickle DP, et al. Manual wheelchair ISO-ANSI/RESNA fatigue testing experience. In: Proceedings of the 17th Annual RESNA Conference; 1994, Nashville, TN. Washington, DC: RESNA Press, 1994:324–6.
42. Dummer GWA, Winton RC. An elementary guide to reliability, 4th Ed. Oxford, England: Pergamon Press, 1990.