Department of Veterans Affairs

Journal of Rehabilitation Research and Development Vol. 33 No. 1, February 1996
Pages 30–35

Stability of walking frames

A. Barry Deathe, MD; Richard D. Pardo, MSc; David A. Winter, PhD; Keith C. Hayes, PhD; Jennifer Russell-Smyth, BScCP

Department of Physical Medicine and Rehabilitation, University of Western Ontario, London, Ontario, N6A 1Y6 Canada; Department of Kinesiology, University of Waterloo, Waterloo, Ontario, Canada; Department of Prosthetics and Orthotics, Chedoke McMaster Hospital, Hamilton, Ontario, L8N 3Z5 Canada

Abstract—Biomechanical tools were used to assess stability for 11 patients who, following the surgical amputation of one lower limb, required the assistance of a walking frame to ambulate. The Walker Tipping Index (WTI), as derived from the forces applied to the walking frame, was developed specifically for this study to examine the relationship between stability and walking frame height during ambulation. However, the WTI may be useful as a criterion of stability to assist clinicians in their evaluation of walker use in a variety of patient populations.

Walker stability was examined as subjects, wearing their prostheses, completed 30-sec walking trials in each of the normal, high, and low walking frame height conditions. Adjusting the height of the walker to one setting (3 cm) above or below normal appears to redistribute the load of walking between the upper and lower extremities without adversely affecting stability.

Keywords: *amputation, assist, balance, biomechanics, gait, prosthesis, stability, walker.*

INTRODUCTION

Falls are a major health concern for the elderly (1–3), especially for those with reduced stability due to unilateral or bilateral lower limb amputation. People with amputations typically depend on assistive devices such as walkers to assist their stability and avoid falls while standing and moving. While prescription of these aids is widespread, there exists little empirical evidence regarding the stability afforded by walkers to adults. When one considers the falling opportunities for someone with a leg amputation, as he or she progresses from hopping with the walker postoperatively, through early rehabilitative retraining of balance, to prosthetic trials, and finally home to environmental hazards, there is a clear need to understand more fully the nature and extent of stability of walker-assisted gait with a view to developing more appropriate intervention.

The present study was designed to address two questions: how can walker stability be measured? and, how does walker height influence its stability? Conventional clinical practice dictates that walker height should be set such that elbow flexion is 30° in quiet standing; otherwise, stability in standing and gait is thought to be compromised (4). In the current study, walker stability during gait was evaluated in a group of patients with unilateral amputation, using a recently developed biomechanical criterion of stability, the "Walker Tipping Index" (WTI). In an earlier paper, a more mathematically sophisticated walker model, the Walker User Risk Index (WURI), was described (5). The WURI requires detailed and continuous kinematic information about the patient to estimate patient stability. The less complicated WTI presented here may have more utility in a clinical setting and may prove useful in evaluating issues of walking stability in individual patients, or in

This material is based upon work supported by the Medical Research Commission of Canada.

Drs. Deathe and Hayes are with the Department of Physical Medicine and Rehabilitation, University of Western Ontario, London, Ontario; Dr Winter and Mr. Pardo are with the Department of Kinesiology, University of Waterloo, Waterloo, Ontario; Ms. Russell-Smith is with the Department of Prosthetics and Orthotics, Chedoke McMaster Hospital, Hamilton, Ontario, Canada.

Address all correspondence and requests for reprints to: R.D. Pardo, Department of Physical Medicine and Rehabilitation, 5th Floor, St. Mary's Hospital, 35 Grosvenor Street, London, Ontario N6A 1Y6, Canada.

the design or development of new rehabilitation strategies for improving the stability of patients with compromised gait.

METHODS

Subjects

The patients (n=11) participating in this study were inpatients with unilateral amputation at St. Joseph's Health Center in London, Ontario. Their age, weight, sex, and clinical characteristics are reported in **Table 1.** While most of the patients had recent surgical amputations, some had been re-admitted to the hospital for refitting of their prostheses. All patients were walker-dependent yet able to ambulate at least 5 m without needing to rest. These selection criteria enabled data collection on a consecutive sequence of patients with a range of clinically based concerns rather than providing a normative base per se. Informed consent was obtained from all patients.

Protocol

The patients replaced their usual walkers with an instrumented, rigid, aluminum frame walker (6) and walked for a series of three 30-sec trials. The height of the walker was adjusted to approximate the level of the patient's distal ulnar styloid process as measured with the patient standing with arms relaxed by his/her sides (4). This height served as the normal condition, with the high and low conditions varying one setting, or approximately 3 cm, above and below the patient's normal height. Three walker frames (large, medium, and small) were required to accommodate the range of walker heights required by the patients. Patients were allowed to practice with the instrumented walker at each height until they reported feeling comfortable with the device. This accommodation period typically took between 5 and 10 min.

Table 1.
Subject information.

Age		Sex		Weight (kg)		Amputation Level	
$\bar{X}$	SD	M	F	$\bar{X}$	SD	AK	BK
64.5	15.8	7	4	69.6	11.5	2	9

$\bar{X}$ = mean; SD = standard deviation; AK = above knee; BK = below knee.

Biomechanical Assessment of Stability

All four walker legs were fitted with strain gauges to monitor three-dimensional ground reaction force data from each corner of the walker's base of support. Details of the instrumentation have been reported elsewhere (6). Foot switches were used to provide stance and swing times for the lower limbs. All 12 force signals were sampled at 125 Hz. A 16-channel telemetry system (7) with a bandwidth of 500 Hz per channel was employed to send the analog signals to a receiver and A/D converter (Metrabyte Corp., Taunton, MA). Sampled force records from each trial were stored with a standard MS-DOS 386SX computer.

Force records were filtered in the forward and reverse directions of time by a second order critically damped low-pass digital filter. An overall cut-off frequency of 10 Hz was suggested from a harmonic and residual analysis conducted on the data (8). Each orthogonal force from the walker was transformed from the walker leg axis system into a global reference system using a direction cosine matrix (9). The orientation of the strain gauges within each walker frame used in the study were previously measured and considered fixed for the periods of walker stance. Force records from the strain gauges were used to compute the center of pressure of the walker through application of Varignon's theorem (10).

The tendency for the walker to tip forward depends on the forces (F_Y, F_X) applied to the walker and their respective perpendicular distance from the expected tipping axis (see **Figure 1**). A forward tipping moment about an axis which connects the walker's two front legs with the floor can be expressed as the product of the anterior shear force (F_X) and the height of the walker's hand grips (height). The forward tipping moment increases with the magnitude of the forward shear force and with walker height, making the walker less stable.

The downward vertical load on the walker (F_Y), applied through the walker center of pressure at a perpendicular distance (r_P) from the axis connecting the front two walker legs, creates a moment which resists the tendency for the walker to tip forward. The larger the downward F_Y, the greater this resistive moment, and the walker is more stable. The walker becomes more likely to tip forward as the center of pressure approaches the front legs and is less likely to tip forward as the center of pressure approaches the rear legs.

The walker will begin to tip, or rotate about an axis when the moments of force about that axis are equal

Journal of Rehabilitation Research and Development Vol.33 No. 1 1996

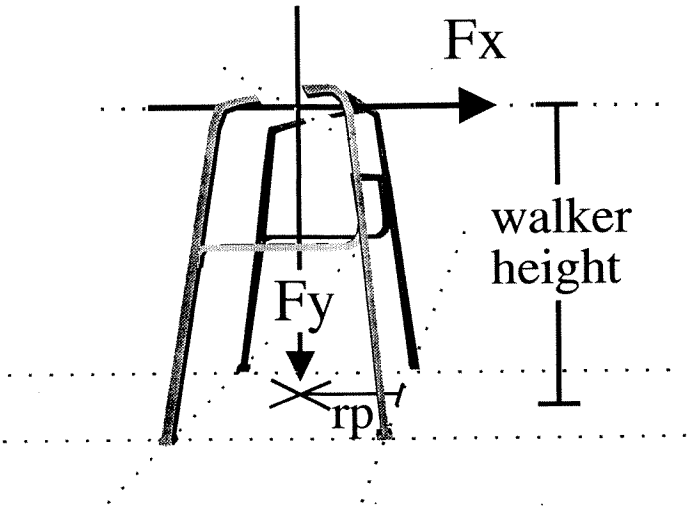

Figure 1.
An illustration of the vertical (Fy) and anterior (Fx) forces applied to a typical walking frame. Fx applied at the walker hand grips creates a "moment of force" that tends to tip the walker forward over its front two legs. As long as this forward tipping moment is less than the moment created by Fy applied at a perpendicular distance (r_p) from the front two walker legs, the walker will not tip forward.

and opposite. Therefore, the ratio of the forward moment ($F_X \times$ height) to the resistive moment ($F_Y \times r_P$) provides an estimate of the risk of the walker tipping forward ($WTI_{forward}$) as shown in Equation 1.

WTI curves were derived from the force and center of pressure data and served as the estimate of walker stability in four directions—forward over the walker's two front legs ($WTI_{forward}$), backward over the rear legs ($WTI_{backward}$), ipsilateral to the side of the prosthetic leg ($WTI_{prosthesis\ side}$) and contralateral to the side of the intact leg ($WTI_{intact\ side}$). An increase in the WTI curve indicates a relative decrease in walker stability.

$$WTI = \frac{F_x \times walker\ height}{F_y \times r_p} \times 100\% \qquad [1]$$

Where:

WTI	=	walker tipping index
Fy	=	vertical walker-to-floor force
Fx	=	horizontal walker-to-floor force acting perpendicular to axis connecting 2 walker legs
rp	=	perpendicular distance of walker center of pressure to axis connecting 2 walker legs
walker height	=	height of walker handgrips above floor

Equation 1 demonstrates that the WTI reflects patient stability in situations where the patient has all of his/her weight (100 percent body weight) on the walking frame. If a patient is using the walker to support a significant proportion of body weight when the walker begins to tip, a fall is more likely to result than if the patient is lightly loading (or feathering) the walker. Therefore, WTI scores reported in the present study have been normalized to the percentage of body weight borne through the walker, as shown in Equation 2.

$$Normalized\ WTI = WTI \times \frac{F_y}{bodyweight}$$
$$\therefore Normalized\ WTI = \frac{F_x \times walker\ height}{body\ weight \times r_p} \qquad [2]$$

Each walker stride was partitioned into phases to assist with the force and WTI analysis. Peak and mean WTI, force, and walker center of pressure values were calculated for each phase as well as for full walker stance from the first nine consecutive walker strides of each patient.

While the walker height conditions were assigned in random order, the sequential nature of these walker-assisted strides introduced another factor into the study: stride number. A within-subject analysis of variance (11) was used to determine if walker height, stride number, or their interaction significantly ($p<0.05$) influenced walker use.

RESULTS

Influences of Walker Height

Figure 2 illustrates how the foot switch and walker contact times were used to divide each walker stride into five distinct phases—walker preload, prosthetic leg swing, mid stance, intact leg swing, walker unload, and walker swing. The relative amount of time spent in double leg and walker support and single leg and walker support was also examined. This figure also illustrates a representative time history of the normalized WTI obtained from a 45-year-old male patient with a right leg below-knee amputation (Rt-BK). The normalized WTI is expressed as a percentage of the axial load on the walker.

Walker height did not have a significant effect on either the duration of walker strides or the relative timing of each phase (see **Table 2**). However, stride number did affect gait phase timing. **Figure 3** illustrates how patients spent significantly less time in midstance as the walker strides progressed from one to nine ($F_{(8,80)}=3.04$, $p<0.01$). Most of the stride effect occurred

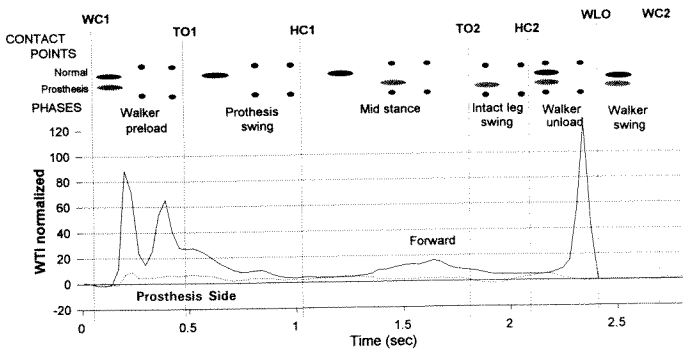

Figure 2.
WTI for one stride from a patient with a right BK amputation. Foot-switch and walker contact times represented across the top of the figure partition the full walker stride into distinct phases. WC1 = initial walker contact; TO1 = toe off of the first leg to advance; HC1 = heel contact of the first leg to advance; TO2 = toe off of the second leg to advance; HC2 = heel contact of the second leg to advance; WLO = walker lift off; WC2 = second or terminal walker contact identifying the end of one stride and the beginning of the next.

Table 2.
Summary of temporal results.

	WALKER HEIGHTS					
	Low		Normal		High	
STRIDE PHASE	$\bar{X}$	SD	$\bar{X}$	SD	$\bar{X}$	SD
Full Stride Duration(s)	2.15	0.42	2.20	0.30	2.14	0.23
Preload (% of full stride)	12.8	6.2	12.8	5.4	14.5	3.4
Prosthetic Leg Swing (%)	16.4	5.5	16.3	4.7	15.3	4.7
Midstance (%)	14.6	4.4	15.2	3.8	14.7	4.0
Intact Leg Swing (%)	15.3	5.6	15.0	6.1	14.1	5.3
Walker Unload (%)	8.9	4.0	8.7	2.3	10.5	3.0
Walker Swing (%)	14.5	3.1	15.2	3.5	15.5	3.8
Walker-Two Leg Stance (%)	36.9	9.6	35.8	9.9	37.0	9.6
Walker-One Leg Stance (%)	28.7	9.2	31.3	8.5	29.4	7.4

$\bar{X}$ = mean; SD = standard deviation.

within the first three strides, suggesting that walker-dependent patients require a few strides to reach a steady ambulatory performance.

Patients exhibited less vertical load on the walker at the high setting (x≈41 percent body weight) than at the low setting (x≈46 percent body weight) during the swing of the intact leg ($F_{(1,10)}$=6.79, p<0.05) for eight of the nine strides examined. The mean anterior shear force applied to the walker gradually increased from the first to last stride regardless of walker height ($F_{(8,80)}$=2.2, p<0.05), and there was a trend for both the

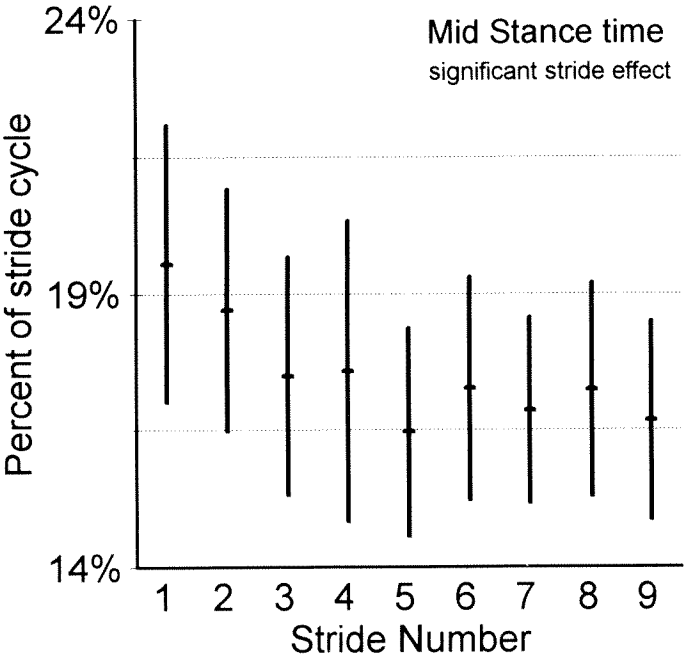

Figure 3.
Percent of stride cycle spent in midstance, averaged for 11 unilateral walker dependent patients with amputation (mean ± standard error). This figure demonstrates that a significant reduction in relative midstance time occurred over the first three of nine consecutive strides ($F_{(8,80)}$=3.045 p<0.01).

high and low walker conditions to elicit greater anterior shear forces than the normal height condition.

Figure 4 illustrates the WTI scores averaged for each phase in the walking stride cycle. $WTI_{forward}$ averages were largest across all phases, suggesting that the walkers are least stable anteriorly. On average, walkers appeared to offer the least stability during the swing of the patient's prosthetic leg. The only significant effects of height and stride number on walker stability were observed for the walker preload periods. Walkers were more likely to tip backward on the patient's initial stride than during the remaining eight ($F_{(8,80)}$=3.0, p<0.01). There was also a greater tendency for the walker to tip backward when patients used the walkers above or below their normal height setting ($F_{(2,20)}$=4.2, p<0.05).

DISCUSSION

Temporal and Stride Measures

Shorter stride durations were generally observed for the present study of people with unilateral amputations (x=2.2 sec, SD=0.34) than for a previous study

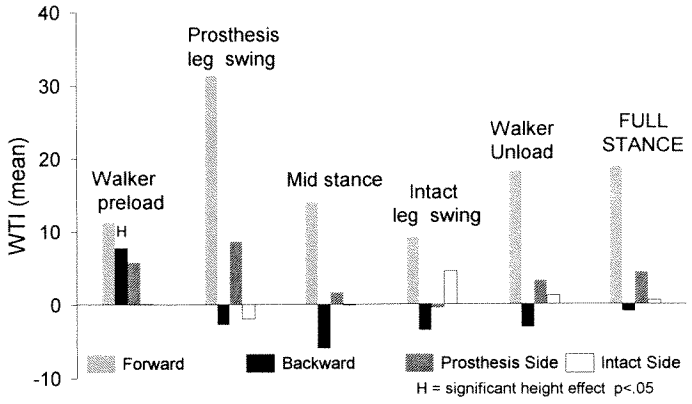

Figure 4.
The WTI scores averaged for each phase of the walker stride cycle. These averages were calculated from 11 patients with unilateral leg amputations over 9 consecutive strides at each of 3 walker frame heights. Forward = WTI over the walker's front legs; Backward = WTI over the walker's rear legs; Prosthesis Side = WTI over the walker's legs on the same side as the prosthesis; Intact Side = WTI over the walker's legs on the same side as the intact leg.

(x=3.2 sec, SD=0.20) which included patients with bilateral amputation (6). The shorter proportion of time spent swinging the intact leg (14.8 percent) versus swinging the prosthetic leg (16.0 percent) suggests that patients may have been attempting to reduce the time that the prosthetic leg was bearing weight. Most of the shortening of midstance relative to the other walk phases occurred within the first three strides. Therefore, patients need a few strides to reach a steady cadence by reducing the relative time required to transfer weight from the rear foot to the lead foot. Clinicians and researchers interested in the detailed study of a few representative strides may be able to use midstance duration as an indicator of steady state ambulatory performance and hence the generalizability of the obtained data. Stride-to-stride trends in vertical loading, anterior loading, and $WTI_{backward}$ suggest that the analysis of gait in walker-dependent people with amputations depends on whether patients are initiating gait, are exhibiting a steady stride-to-stride performance, or are in a period of transition from initiation to a steady state.

Loading Patterns

The walker's primary role is to support the patient's body weight throughout most of walker stance (6). Altering walker height affects the distribution of body weight between the arms and legs during periods when the patient is swinging the intact leg. With an average of 41 percent body weight on the high walker, the prosthetic leg, which is in single support for this phase, must support the remaining body weight (approximately 59 percent). The higher average vertical force noted for the low walker setting during intact leg swing (46 percent body weight) increases the demand on the upper extremities while decreasing the load on the prosthetic leg to approximately 54 percent body weight. Therefore, adjusting a walking frame height 3 cm below "normal" will tend to lower the load on the prosthetic leg at the expense of an increased demand on the upper extremities. Conversely, a person with an amputation who has upper extremity limitations may find it more comfortable to walk with a walking frame height adjusted to 3 cm above "normal," provided that the resulting increase in load for the prosthetic leg can be tolerated. The altered vertical load sharing associated with changing walker height occurs only during swing periods of the intact leg.

Applications of the WTI

The present study was not designed to provide for explicit consideration of the changing base of support associated with the foot placement of walker assisted gait. This issue has been addressed elsewhere (5) using a more sophisticated mathematical model. The method presented here provides for a more expedient assessment of walker stability, inasmuch as it does not require knowledge of limb segment kinematics.

WTI curves reflect the stability offered by the walking frame to the patient. As evident from Equation 1, the tendency for the walker to tip increases with the height of the walker and the magnitude of the shear force. Also, the walker is more likely to tip as the vertical force decreases and the center of pressure approaches the border of the walker's base of support. Conversely, patients can increase their stability by using any combination of increasing the vertical force, moving the center of pressure away from the tipping edge, and decreasing shear forces.

The gradual increase in anterior shear force observed across strides, if left unchecked, should have led to parallel increases in $WTI_{forward}$. However, patients demonstrated fairly consistent $WTI_{forward}$ values across strides for all three walker heights. Patients were able to effectively counter the tipping effects of the increasing anterior shear force by increasing vertical force magnitude and/or moving the center of pressure away from the walker's front legs. No significant stride effects were noted for either vertical force or center of pressure

location. Therefore, it appears that patients used a variety of vertical force and center of pressure combinations to maintain the walking frame's forward stability.

Walkers adjusted to 3 cm either above or below normal also showed an increased tendency for the walker to rotate over the rear legs, particularly just after the walker touched down and before the patient advanced a leg. The $WTI_{backward}$ values tended to peak at walker contact and the increases observed at high and low settings may have been due to the patients' unfamiliarity with the height setting. Instability may be created as walker contact with the ground occurs either later than expected (low setting) or earlier than expected (high setting).

Although the patients were given time to practice with the walkers at high and low settings, each used his or her own walker's normal height settings on a daily basis. The increased tendency for the walker to tip over the rear legs may have been substantially reduced if the patients had been more familiar with the high and low settings.

The walkers remained stable in all directions during periods of midstance and swing of the intact leg. In unassisted gait, a forward fall is initiated with each step as the center of gravity of the body is moved ahead of its base of support (12). The high forward instability observed at the beginning and end of walker stance suggests that a similar controlled fall strategy is used to advance the walker.

CONCLUSIONS

This paper introduces a tool that may help quantify stability of walking frames. Similar procedures may be helpful in the evaluation of walker stability for new products and various patient populations. The WTI reflects the support offered to the user in terms of the forces applied to the walking frame. The current study demonstrates the utility of the device by examining the effect of walker height settings on walker stability in 11 walker-dependent patients with unilateral leg amputations. In summary, limb loading and stability of walker-assisted gait varied markedly through the gait cycle. Shear and vertical forces were altered when walker frames were adjusted 3 cm above or below normal but there did not appear to be significant differences in the stability offered to the unilateral prosthetic patients participating in this study.

REFERENCES

1. Joyce BM, Kirby RL. Canes, crutches, and walkers. Am Fam Physician 1991:40(2):535–42.
2. Sattin RW, Lambert Huber DA, DeVito CA, et al. The incidence of fall injury events among the elderly in a defined population. Am J Epidemiol 1990:131:1028–37.
3. Tinetti ME, Speechley M, Gunter SF. Risk factors for falls among elderly persons living in the community. N Engl J Med 1988:319:1701–7.
4. Deusterhause Minor MA, Deusterhause Minor S. Patient care skills—positioning, range or motion, transfers, wheelchairs and ambulation. Reston VA: Reston Publishing, 1984:149.
5. Pardo RD, Deathe AB, Winter DA. Walker user risk index, a method for quantifying stability in walker users. Am J Phys Med Rehabil 1993:72(5):301–5.
6. Pardo RD, Winter DA, Deathe AB. System for routine assessment of walker-assisted gait. Clin Biomech 1993:8:73–80.
7. Winter DA, Yack HJ. EMG profiles during normal human walking: stride-to-stride and inter-subject variability. Electroencephalogr Clin Neurophysiol 1987:67:402–11.
8. Winter DA. Smoothing and fitting of data. In: Biomechanics and motor control of human movement. 2nd ed. Toronto: John Wiley and Sons Inc., 1990:36–43.
9. Beer FP, Johnston ER. Vector mechanics for engineers. 3rd ed. Montreal: McGraw-Hill Inc., 1977:399.
10. Winter DA. Kinetics. In: Biomechanics of human movement. Toronto: John Wiley and Sons Inc., 1979:75–7.
11. Kepple G. Analysis of the (A X B X S) design. In: Design and analysis: a researcher's handbook. 2nd ed. Englewood Cliffs NJ: Prentice Hall Inc., 1982.
12. Winter DA, Ruder GK, McKinnon CD. Control of balance of upper body during walking, multiple muscle systems. In: Winters J, Woo S, eds. Biomechanics and movement organization. New York: Springer-Verlag, 1990:534–41.