Department of Veterans Affairs

Journal of Rehabilitation Research and Development Vol. 34 No. 1, January 1997
Pages 52–57

Analysis of a vertical compliance prosthetic foot

Laura A. Miller, MS and Dudley S. Childress, PhD
Rehabilitation Engineering Research Program, Department of Orthopaedic Surgery, Northwestern University Medical School, Chicago, IL 60611; Department of Biomedical Engineering, McCormick School of Engineering and Applied Science, Northwestern University, Evanston, IL 60208

Abstract—Mechanical testing of the Re-Flex VSP™ Foot was conducted on the pylon alone and on the pylon and forefoot system. Values for spring and damping correspond well to values reported in the literature for spring and damping of physiological limbs. Pylon stiffness was 49.4 kN/m for a 600 N subject and 91.4 kN/m for an 800 N subject. The vertical stiffness of the pylon and forefoot together was 31.9 kN/m and 37.8 kN/m, respectively. Gait parameters of two persons with transtibial amputation who used vertically compliant feet for walking, jogging in place, and curb descent were investigated. Ground reaction forces, vertical trunk movement, event timing, and pylon compression were observed. The spring-loaded telescoping pylon was immobilized for half the trials. The trials were repeated the following week with the vertical compliance feature mobilized. Significant differences in vertical trunk motion and timing were found between the prosthetic limb and normal limb, as might be expected. Vertical compliance appeared to cause little change in gait parameters during normal walking. The largest differences appeared during the higher impact events such as fast walking and jogging in place.

Key words: *amputation, artificial feet, gait analysis, prosthesis.*

This material is based upon work supported by a Whitaker Graduate Fellowship in Biomedical Engineering; the Department of Veterans Affairs, Rehabilitation Research and Development Service, Washington, DC 20420; and the National Institute on Disability Rehabilitation Research of the U.S. Department of Education, Washington, DC 22202.
Address all correspondence and requests for reprints to: Laura A. Miller, Rehabilitation Engineering Research Program, Northwestern University, 345 E. Superior Street, Room 1441, Chicago, IL 60611; email: lamiller@nwu.edu.

INTRODUCTION

Vertical compliance is a recent addition to prosthetic components for transtibial and transfemoral prosthetic systems. The addition of vertical compliance in prosthetics appears to have some obvious advantages. Since individuals with a lower limb amputation cannot actively plantarflex the ankle joint, vertical compliance can reduce shock during vertical impulse events, such as stepping off curbs or walking down stairs.

Vertical compliance in prosthetics is not a new concept. DiAngelo discussed results of the Terry Fox Jogging Prosthesis in 1989 (1). This above-knee prosthesis had a telescoping pylon in the lower shank. The desired action of the pylon was to store energy early in stance for later release rather than to specifically aid in shock absorption. Since the prosthesis apparently did not help with forward thrust, as had been expected, the design was not pursued.

Another device designed to provide vertical compliance was the Bouncy Knee, developed at the Bioengineering Centre, University College London (2). The Bouncy Knee is a modified Blatchford stabilized knee that gives slightly under weight bearing rather than locking rigidly. The stiffness of the spring could be adjusted so that the users had what they felt was a comfortable amount of stance phase knee flexion.

The addition of vertical compliance to prostheses has a basis in the physiological limb. Cavagna (3) measured the vertical compliance and damping of the plan-

tarflexors by having subjects perform a vertical jump on a force plate, landing with the knees locked and toes extended. By analyzing the damped force record, stiffness and damping ratios were calculated. The approximate stiffness for jumping onto one leg was 24 kN/m and onto 2 legs was 37 kN/m. Using a similar protocol, Bach (4) found a vertical stiffness of 31.9 kN/m for jumping onto one leg.

The most recent vertical compliance prosthesis is the Re-Flex VSP™, which has a cantilever forefoot spring common to many dynamic elastic response feet. In addition, a leaf spring, made of carbon fiber in epoxy, connects the two sides of a telescoping pylon in the shank to add vertical shock absorption (**Figure 1**). The purpose of this study was to characterize the mechanics of the Re-Flex VSP system and to compare these values with values for the physiological limb. Gait analysis tests were also conducted on two subjects using the prosthesis, first with the vertical pylon immobilized (i.e., not telescoping) and then with the pylon active. The influence of the vertical compliance was investigated for various activities.

METHODS

Two subjects were selected for this study. Subject A, 30 years of age, weighed approximately 600 N and subject B, 45 years, 800 N. The recommended Re-Flex VSP prosthesis for the weight, size, and activity level were acquired for each subject and used for the mechanical and subject testing.

Mechanical Testing of the Re-Flex VSP

For all mechanical testing a specially designed foot testing apparatus (**Figure 2**) was used (5). Tests were conducted of the total foot and of each individual pylon. Each shank pylon was separated from the lower foot components for the individual pylon testing. The pylon was oriented vertically in the apparatus for each test. Attachment of the pylon to the lower beam was through the standard four-hole adapter used to attach the prosthesis to the socket. For the "pylon only" tests, a small metal plate with a round top bolt through the center was placed on the free flat cylindrical surface of the pylon to equally distribute force application on the outer tube. For the total foot tests, the "ball" of the prosthetic foot was placed on the deflection plate. A ball-bearing sandwich was placed between the strain gage plate and the foot or pylon. This plate acted as a frictionless surface so that all forces were normal at the contact surface. The output of the strain gages on the plate and the force applied at the end of the beam were calibrated to the force applied to the pylon or foot by balancing moments about the axis of rotation of

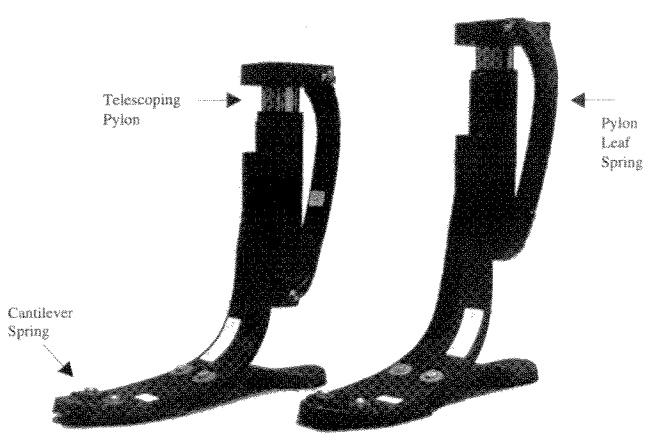

Figure 1.
Photograph of Re-Flex VSP™ Feet. The foot on the left was used by subject A and that on the right by subject B.

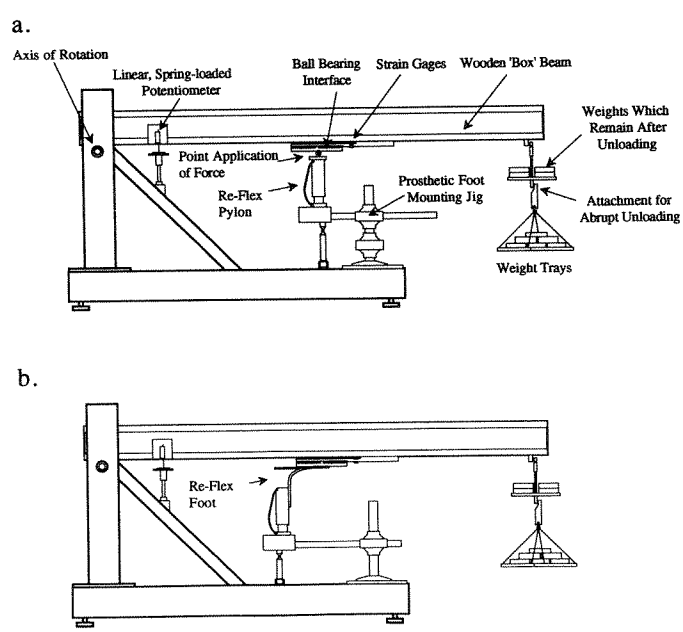

Figure 2.
Foot testing apparatus: a) pylon setup; b) total foot setup.

Journal of Rehabilitation Research and Development Vol. 34 No. 1 1997

the box beam. A potentiometer mounted near the axis of rotation of the beam was used to determine the displacement of the pylon or foot. Deflection of the box beam itself was assumed minimal and ignored. All data from the foot testing apparatus were collected at a sampling rate of 200 Hz. For static tests, weights were gradually loaded and unloaded at the end of the beam (approximately one load/unload cycle in 30 s). From the potentiometer and the strain gage output, the displacement and force could be calculated. These tests were conducted with the pylon alone and with the total foot. Twelve cycles of loading-unloading are shown in **Figure 3a.**

Dynamic tests were also conducted on the pylon and total foot. For the pylon tests alone, weight approximating body weight was applied at the end of the beam. The bottom weight tray (weight of trunk plus one leg) was rapidly knocked off, simulating a step unloading. The damped oscillation of the pylon position was recorded (**Figure 3b**). For tests with the pylon and forefoot mounted together, the addition of the bottom weight trays deformed the foot past the operational area of the testing apparatus. Therefore, a different procedure was used to observe the damping of the forefoot. The end of the beam was driven in an oscillatory motion at what was "felt" to be the resonant frequency of the system. Although this was a subjective rate, the foot did have a frequency at which the forefoot and pylon were oscillating in harmony and the beam was easiest to move. Once the beam was oscillating comfortably, data collection was begun. After approximately 4 to 5 s, the beam was released. Following release of the beam, the pylon motion stopped almost immediately (**Figure 3c**). The remaining oscillation was the damped position response of the forefoot alone.

Subject Testing

In addition to the mechanical testing, the Re-Flex VSP was tested on two subjects. For the initial set of tests, the pylon was immobilized. The prostheses were fit and aligned by a Certified Prosthetist. Subject A wore the prosthesis 3 days before the first test session. Subject B felt uncomfortable using a new prosthesis and only wore it for short periods before each session. Following the initial test session (no pylon telescoping), the pylon immobilizer was removed and the subjects were given an additional week to get used to the prosthesis. No alignment changes were deemed necessary following release of the pylon so that it could telescope. Five different test conditions were conducted for both experimental conditions: walking at a freely selected pace, walking at a fast pace, jogging in place, stepping off a 7-in curb onto the prosthetic limb, and stepping off the curb onto the physiological limb. The following parameters were measured: vertical ground reaction force, foot contact times (via foot switches), pylon displacement, and vertical trunk motion. Trunk motion was measured with a CODA-3 Motion Analysis System (Charnwood Dynamics, Barrow-on-Soar, Leics., England). For curb descent, jogging in place, and trials walking toward the CODA-3, the trunk

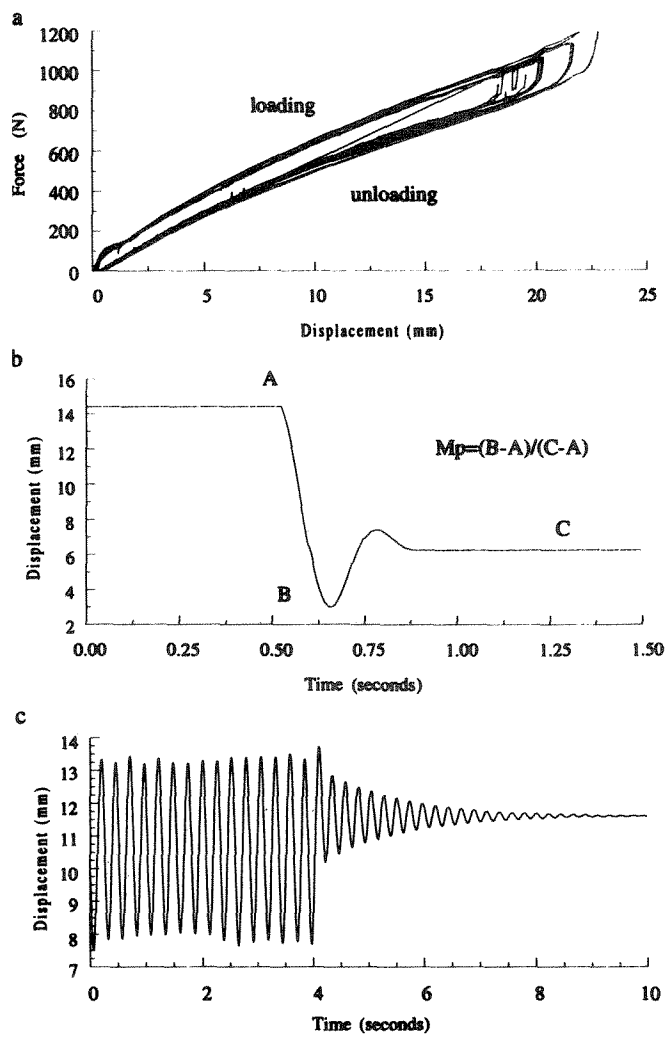

Figure 3.
Mechanical testing of prosthesis A: a) static testing of pylon; b) dynamic testing of pylon; c) resonance of system and damped oscillation of the forefoot.

motion was calculated as the midpoint of two markers placed on the two anterior superior iliac spine (6). For trials walking away from the CODA-3, the motion of the trunk was estimated with a marker placed on the lower back approximately over the second sacral vertebra (7). Gait data were collected at a sampling frequency of 300 Hz and processed by a tenth order bidirectional Butterworth filter with an effective cutoff frequency of 6 Hz. Statistics were done using Analysis of Variance (ANOVA) with the variables of limb (physiological or prosthetic) and pylon condition (immobilized or functional). Multiple comparison tests were conducted using the Bonferroni test to determine the significance of individual comparisons (e.g., comparing results when the pylon was immobilized and when it was functional on the prosthetic limb). For parameters with only one condition (e.g., horizontal speed), the Student's t-test was used. The statistics for each subject were analyzed separately. A significance level of 0.05 was chosen for all statistical comparisons.

RESULTS

Mechanical Testing

The mechanical testing results are shown in **Figure 3. Figure 3a** is the static testing force-displacement curve for pylon A. The curves for pylon B and for each total foot were similar. The stiffness of the pylon, K_{pylon}, was estimated by a linear regression of the loading portion of the force-displacement curve. The stiffness calculated for pylon A was 49.4 kN/m and for pylon B was 91.4 kN/m.

The dynamic position response data for pylon A is shown in **Figure 3b** (Pylon B produced a similar response). The results are those expected of a second-order mass-spring-damper system. Based on the static and dynamic data, a second-order model of the pylon was developed (**Figure 4a**). The rapid weight removal of the dynamic pylon testing simulated a step unloading and from the position response the damping ratio of the model could be calculated. The damping ratio, ζ, is a unitless measure of energy loss for a second-order system based on the mass, stiffness, and damping of the system. It was calculated from the dynamic position response using the percentage overshoot, M_p. For a second-order system, the percentage overshoot following a step input is related to the damping of the system and is defined as $M_p = \exp(-\zeta\pi/\sqrt{1-\zeta^2})$ (8). The damping ratio for the pylon model was 0.2897 for pylon A and 0.3844 for pylon B.

A net foot stiffness, K_{Total}, was calculated from a linear regression of the load portion of the static trial force-displacement curves (not shown). The value of K_{Total} for foot A was 31.9 kN/m and 37.8 kN/m for B. For the static testing of the total foot, the stiffness found could be modeled as the sum of a pylon spring and a forefoot spring in series (**Figure 4b**). Based on this assumption, K_{foot} could be calculated from

$$\frac{1}{K_{Total}} = \frac{1}{K_{pylon}} + \frac{1}{K_{foot}}.$$

From this equation, the stiffness of the forefoot was calculated to be 89.9 kN/m for foot A and 64.0 kN/m for foot B. Damping was ignored for the static tests.

The damped position response for the entire foot is shown in **Figure 3c.** The initial oscillation was the natural frequency of the entire pylon/forefoot system. The damped oscillation of the forefoot following release of the beam at 4 s was primarily due to the forefoot. A second spring-damper model was developed for the forefoot system. The logarithmic decrement method was used to

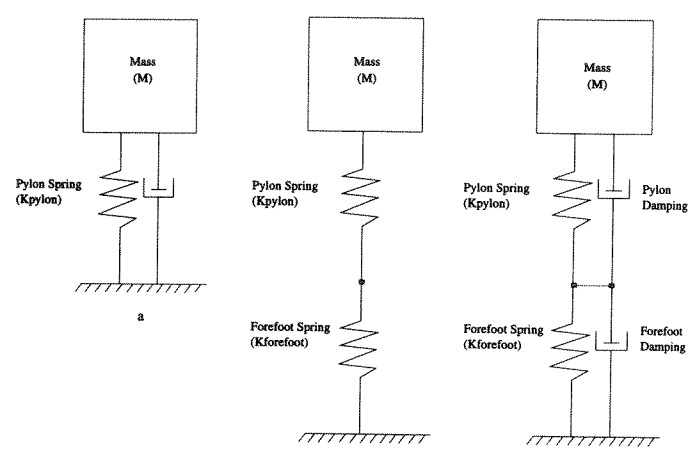

Figure 4.
Model of prosthesis: M equals body mass minus the mass of one leg. Damping can be calculated from the Mass (M), Spring (K), and Damping Ratio (ζ) values. a) Pylon model; b) Model to determine $K_{forefoot}$ from K_{Total} and K_{pylon}; c) Complete model of the Re-Flex VSP prosthesis. For prosthesis A: K_{pylon}=49.4 kN/m, K_{Total}=31.9 kN/m, $K_{forefoot}$=89.9 kN/m, ζ_{pylon}=0.2897, $\zeta_{forefoot}$=0.0279. For prosthesis B: K_{pylon}=91.4 kN/m, K_{Total}=37.8 kN/m, $K_{forefoot}$=64.0 kN/m, ζ_{pylon}=0.3844, $\zeta_{forefoot}$=0.0264.

calculate the forefoot damping ratio (8). The forefoot system damping ratios were 0.0279 and 0.0264 for A and B, respectively. The complete pylon and forefoot model is shown in **Figure 4c.**

The "natural frequency" of the pylon and forefoot prior to release of the beam was used to check the values of the parameters calculated for the model. Since the damping of the forefoot is 10 times less than that of the pylon, it was ignored to simplify the calculation, and the foot was modeled as a third-order system (the mass, two springs, and one damper). The predicted values for the damped natural frequency of the model (using the independently calculated parameters) were 23.20 Hz and 26.65 Hz. In comparison, the measured frequencies while the entire system was manually oscillated were 21.3 Hz and 23.9 Hz. The predicted values are, respectively, 9 and 11 percent greater than the measured values, indicating relatively good agreement with the simplified model.

Subject Testing

For freely selected walking, most differences seen were between the physiological and prosthetic limbs. These differences included increased stance time on the physiological limb for subject B, increased swing time of the prosthetic limb for both subjects, and increased vertical motion of the trunk during physiological limb stance. Peak-to-peak excursion of the pylon during freely selected gait was 9.4 mm for subject A and 6.6 mm for subject B.

More differences were seen between pylon conditions for fast walking than for freely selected walking. Most of these changes were seen with subject A, who walked faster with the pylon functional than with it immobilized. In addition to the increase in speed, the vertical ground reaction force was greater and the peak-to-peak motion of the trunk was greater with the pylon functional. For both subjects, the stance time was decreased when the pylon was functional. For subject B, there was still an increased stance time on the physiological limb. Both subjects continued to have shorter swing times for the physiological limb than for the prosthetic limb at the higher walking speed. The pylon compression for fast walking was 13.3 mm for subject A and 7.2 mm for subject B.

The greatest differences between the two pylon conditions were seen during jogging in place. There were still some differences between the physiological and prosthetic sides. Both subjects had an increased peak vertical ground reaction force on the physiological limb compared to the prosthetic limb for both pylon conditions. Subject A jogged in place at a faster rate with the pylon functional, which can be correlated to a significant increase in the peak vertical ground reaction force with the pylon functional, compared to with the pylon immobilized. With the pylon immobilized, both subjects had a double support phase, since the prosthetic limb was not lifted off the ground until after the physiological limb landed. This double support condition was eliminated when the pylon was functional, and both subjects had a period of "float" before the physiological limb contacted the ground. The prosthetic stance time was also decreased when the pylon was functional. During jogging, the pylon compressed 22.0 mm for subject A and 16.6 mm for subject B. This compression caused an increase in the peak-to-peak vertical trunk motion during prosthetic stance with the pylon functional, compared to trials with it immobilized.

For curb descent, there were obvious differences in descent methods between trials of stepping onto the physiological and those of stepping onto the prosthetic limb. When landing on the prosthetic limb, the subjects eased themselves down, and when stepping onto the physiological limb, both subjects basically fell over the step, landing on the physiological limb. This led to significant differences in vertical landing force, with the physiological step forces statistically greater than the prosthetic step forces. When comparing pylon conditions, subject A did have an increase in force with the pylon functional. However, the subjects altered their typical behavior for the test session and so no conclusions were drawn from the data.

DISCUSSION

Comparison of the Model to Experimental Measures

Modeling the pylon as a second-order system was an oversimplification. Specifically, all components of the model were assumed linear. The components most affected by this assumption include the spring stiffness and the damping. Also, this model was limited to situations in which the pylon was vertical and load was applied to the forefoot.

Several researchers have done experiments on the physiological limb that mimic these conditions. The values of spring coefficient found for a similar physiological condition correspond well to those found for the prosthesis. Cavagna (3) and Bach (4) had subjects jump up and

land with toes extended and knees locked, and found platarflexor stiffnesses of 24 kN/m and 32 kN/m. The net spring stiffness found for the prostheses were 31.9 kN/m and 37.8 kN/m. It is interesting to note that, although the pylon stiffnesses, 49.4 kN/m and 91.4 kN/m, are quite different for the two subjects, the net stiffnesses were very similar for the two prostheses and close to the experimental physiological values.

Subject Testing

The use of only two subjects limits the power of this study. Although some differences were seen when subjects walked at a freely selected pace with the pylon immobilized and with it functional, the most dramatic differences were seen between the physiological and prosthetic limbs. Subject B specifically had asymmetries between the two limbs. Subject A seemed to be more influenced by the pylon conditions, possibly due to the fact that he wore the prosthesis longer and knew how better to take advantage of it. The lack of stance time differences for subject A between the prosthetic and physiological limb are probably attributable to the subject's more active lifestyle. The decreased pylon excursion for subject B, despite his larger mass compared to subject A, is due to a higher pylon stiffness relative to the mass.

Both subjects personally preferred the prosthesis with the telescoping pylon functional, even for freely selected gait. The reason for a lack of significant differences in biomechanical characteristics due to pylon changes may be that, by measuring a limited number of characteristics, the biomechanical influences are not seen. However, most other investigators have measured more characteristics (i.e., joint kinematics, oxygen consumption, and so forth) when comparing gait with different prosthetic feet systems and have not found consistent correlation between subjective preference and a biomechanical change. It is possible that the subjects may have been unconsciously altering their observed gait mechanics so that the total appearance of the system was unaltered, especially for the lower impact events when the motion of the pylon was small. Even though small changes in pylon motion did not seem to alter the measurable biomechanical characteristics to a significant degree, the subjects were still able to discriminate and choose between the two systems.

CONCLUSIONS

The goal of this study was to mechanically characterize the vertical compliance of the Re-Flex VSP prosthesis and to analyze the effects of the vertical shock pylon on different activities when used by persons with amputation. We found it interesting that the values determined for the spring and damping of the system fit well within the range of those reported for physiological systems. Few biomechanical differences were seen when the subjects walked with and without the compliant pylon. However, there was a strong subjective preference for the compliant limb.

REFERENCES

1. DiAngelo DJ, Winter DA, Ghista DN, Newcombe WR. Performance assessment of the Terry Fox Jogging Prosthesis for above-knee amputees. J Biomech 1989:22:543–58.
2. Fisher LD, Lord M. Bouncy Knee in a semi-automatic knee lock prosthesis. Prosthet Orthot Int 1986:10:35–9.
3. Cavagna GA. Elastic bounce of the body. J Appl Physiol 1970:29:279–82.
4. Bach TM, Chapman AE, Calvert TW. Mechanical resonance of the human body during voluntary oscillations about the ankle joint. J Biomech 1983:16:85–90.
5. Childress D, Sandifer A, Knox E. The influence of shoes on forefoot mechanics of prosthetic feet. In: Proceedings of the Ninth Scientific Meeting of the Japanese Society of Prosthetics and Orthotics 1993.
6. Cappozzo A. Gait analysis methodology. Hum Mvmt Sci 1984:3:27–50.
7. Peizer E, Wright DW, Mason C. Human locomotion. Bull Prosthet Res 1969:10-12:48–105.
8. Franklin GF, Powell JD, Emami-Naeini A. Dynamic models and dynamic response. In: Feedback control of dynamic systems, 2nd ed. New York: Addison-Wesley Publishing Co., 1991:17–91.