Department of Veterans Affairs

Journal of Rehabilitation Research and Development Vol. 35 No. 1, January 1998
Pages 43–51

A neural net representation of experienced and nonexperienced users during manual wheelchair propulsion

Patrick Patterson, PhD, PE and Scott Draper, MS
Iowa State University, College of Engineering, Ames, IA 50011; Younker Rehabilitation Center, Iowa Methodist Medical Center, Des Moines, IA 50309

Abstract—A neural net approach was used to classify and analyze combinations of the physiological and kinematic responses (the factor patterns) of experienced and novice individuals during wheelchair propulsion, and to determine the key characteristics (individual factors) used in making this determination. A sequence of artificial neural networks (ANN) was developed and used to classify differences between eight nonimpaired conntrols and seven individuals using wheelchairs, who ranged in age from 24 to 36 years. The subjects propelled a wheelchair on a specially constructed dynamometer at three different velocity levels during which stroke pattern, force, energy, and efficiency data were collected. The data from 10 subjects (5 from each group) were used to train a net, with the data from the remaining 5 subjects used to test the resulting net. The nets correctly classified the training subjects in all 10 cases and correctly classified all 5 test subjects, indicating that the developed networks were able to generalize to new data sets. It was concluded that a minimal net consisting of only three variables, peak VO_2 at the high velocity, hand force on the rim at the low velocity, and push angle at the high velocity, could accurately represent the differences between these groups.

Key words: *neural nets, wheelchair propulsion.*

This material is based upon work supported by the Biomedical Engineering Program, Iowa State University.
Address all correspondence and requests for reprints to: Patrick Patterson, PhD, PE, Associate Professor, College of Engineering, Iowa State University, Ames, IA 50011; email: ppatters@iastate.edu.

INTRODUCTION

The effectiveness and efficiency of wheelchair propulsion are influenced by a wide range of variables. Studies to date have concentrated in several diverse areas including wheelchair mechanics, propulsion physiology, electromyography, kinematics, propulsion modeling, and muscle and joint modeling.

These studies have been conducted with a variety of objectives in mind. Some have focused on:

1. the physiological comparisons between wheelchair propulsion and other, more common, forms of locomotion, such as bicycle riding (1)
2. the mechanical and ergonomic aspects of efficient propulsion (2–5)
3. the kinematics of various body segments during a propulsion cycle (6–8)
4. the metabolic characteristics, such as oxygen uptake, steady state, and oxygen deficit (9,10).

Each of these investigations has provided much needed information regarding a single aspect of propulsion. However, functional analysis of wheelchair use, whether for athletic activities or for the novice user, depends upon the interactions of the above factors. Rather than looking at individual characteristics and parameters, it might be beneficial to examine how these factors interrelate; that is, the pattern of the factors. One technique for looking at the patterns and interdependence of factors is through the use of artificial neural networks (ANN) that can be used for a wide variety of learning tasks by providing a mathematical tool similar

Journal of Rehabilitation Research and Development Vol. 35 No. 1 1998

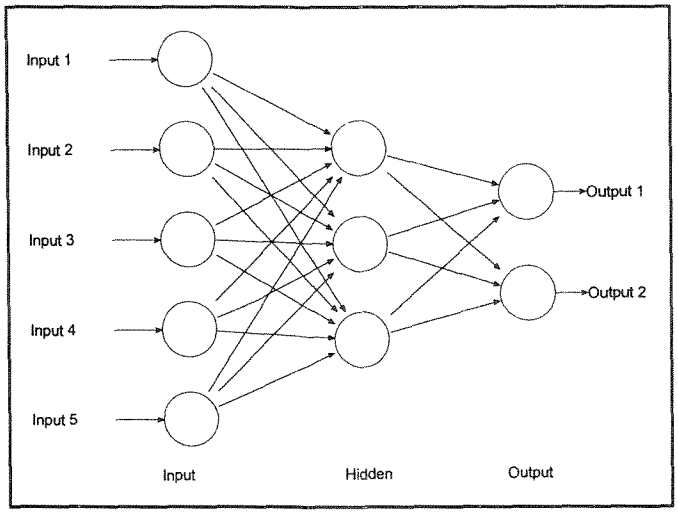

Figure 1.
The components of a basic neural net. The input layer accepts the data, the hidden layer processes the data, and the output layer indicates the results of a classification.

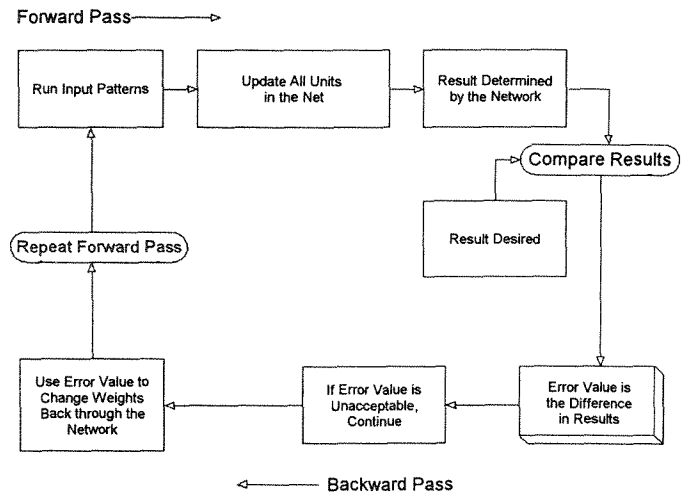

Figure 2.
The stages of the back propagation method as adapted from Carling (13).

to regression analysis. However, an ANN has a distinct advantage over a regression analysis as it uses nonlinear mathematics and so can model highly complex and nonlinear functions. A neural net can also be trained to recognize variations and combinations of the included variables that belong to a specific category. In addition, the resulting ANN model can be used in real-time applications for which information must be interpreted and decisions made quickly, based upon that interpretation.

The ANN can be thought of as a black box that can predict an output pattern (dependent variable) when it recognizes a given input pattern (independent variables). Most ANNs must be trained (learn) by first processing input patterns that have been associated with specific outputs, called targets. An ANN, after training, can recognize similarities to the original data when presented with an input pattern not previously seen. That is, the net is able to generalize its results to new data. The ANN may detect important predictive patterns not previously apparent. Not only does the ANN approach provide a perspective that may contribute both new and different information, it has the added advantage that, provided with sufficient training data, a single net can be developed for use in a wide variety of situations.

The most prevalent and versatile ANN currently in use is the back propagation network, which consists of a sequence of units (nodes) arranged in connected layers (**Figure 1**). There are three distinct layers of units: the input layer, the hidden layer, and the output layer. These units constitute a system of equations that receive input data patterns and calculate an output pattern based on that input.

Two stages comprise the back propagation technique: the forward pass and the backward pass (**Figure 2**). In the forward pass, data are fed into the input layer and then propagated (distributed) from the input nodes to the nodes of the hidden layer. Each node of the hidden layer computes a weighted sum of these input data and applies a transfer function before sending them to the next layer. More than one hidden layer may be used, depending upon the problem being investigated. The data then arrive at the output layer, whose nodes perform computations similar to those of the hidden layer(s), resulting in a final calculated value. This final value is then compared to the expected value. If this difference is not within a pre-determined range, the error is fed back through the system (the backward pass). During this procedure, the weight factors (represented by the connections between the layers) are changed to improve the network's response during the next forward pass.

This iterative procedure of processing inputs through the network, determining the associated errors, and using these errors to adjust the network weights, constitutes the learning, or training, process. One training iteration is complete when all supplied cases have been processed through the network. Once a

network has been successfully trained, it can be used to predict the results of new, previously unseen, input data. ANNs have been used successfully to investigate the existence of nonlinear patterns in areas, such as lumbar muscle recruitment (11) and human gait (12). For greater detail on the development and use of back propogation neural networks, refer to Carling (13) or Smith (14).

A system for obtaining information about user activity patterns based on a neural net approach may provide new insights for future investigators to consider when developing, evaluating, or monitoring specialized training for the wheelchair athlete or for the novice wheelchair user. Thus, the goal of this study was to determine the feasibility of using ANNs to classify users based upon wheelchair/user interactions. The specific objectives of this study were to: 1) determine if an ANN approach could successfully classify individuals during wheelchair propulsion based upon a small data set containing physiological and kinematic characteristics, and 2) evaluate ANN models and the key characteristics used in making these classifications. It was anticipated that several variables would not be useful in differentiating between the groups. To test this, multiple models were constructed, which used different combinations of the input variables with the most extraneous inputs from the prior model being discarded.

METHODS

Subjects

The subject pool consisted of 15 male volunteers ranging in age from 24 to 36 years (**Table 1**). Eight subjects were nonimpaired controls with no wheelchair experience, while the other seven regularly used wheelchairs. As the study explored the potential for using the ANN technique for classifying individuals, these groups were selected to maximize the expected differences.

Table 1.
Subject characteristics.

	Nonimpaired Controls	Wheelchair User
Age (years)	26.3 (1.5)*	31.7 (2.3)
Weight (kg)	74.1 (10.2)	74.3 (12.2)
Shoulder to elbow (cm)	35.8 (2.5)	34.9 (3.1)
Elbow to wrist (cm)	25.7 (1.5)	26.6 (1.6)
Elbow angle (degrees)**	112.1 (5.0)	107.6 (5.7)
Time in chair (years)		14.4 (10.6)
Level of Injury		T4 (2 subjects)
		T5 (4 subjects)
		Osteogenesis imperfecta (1 subject)

* = Mean (standard deviation); ** = the angular relationship between the upper arm and forearm when the subject initially grasps the handrim.

The study was approved by the University Human Subjects Review Committee. Each subject signed an informed consent before participating. No significant differences ($p<0.05$) in body weight, shoulder-to-elbow distance, elbow-to-wrist distance, or sitting elbow angle were found between the two subject groups.

Variables

The variables investigated were divided into two categories: technique characteristics and physiological characteristics.

Technique Characteristics

Technique characteristics represent the user's approach in applying force to the handrim to produce propulsion. The following were collected:

- Cycle time (CT): time from hand grasp to next hand grasp on handrim
- Propulsion time (PT): time in which the hand is applying force to the handrim
- Recovery time (RT): time in which the hand is moving to regrasp the handrim and is not applying a force to the handrim
- Percent propulsion time (PT%): PT/CT×100
- Percent recovery time (RT%): RT/CT×100
- Starting grasp angle (SA): hand position at beginning of propulsion time
- Ending grasp angle (EA): hand position at end of propulsion time
- Push angle (PA): EA−SA
- Hand rim force (HRF): the mean force as applied to the handrim during a specific period.

Physiological Characteristics

Physiological characteristics represent the user's response to varying workloads, indicating the usage of energy resources. The following were collected:

- Oxygen consumption (VO_2): oxygen use in response to a given workload
- Peak oxygen consumption (Peak VO_2): the highest value of oxygen consumption measured during a test period
- Respiratory exchange ratio (RER): the ratio of carbon dioxide produced to the oxygen consumed during a test period

Journal of Rehabilitation Research and Development Vol. 35 No. 1 1998

- Kilocalories used per minute (kcal/min): a measure of the heat or energy value of the physical activity
- Work per stroke (WS): mean power output×CT
- Gross propulsion efficiency (GPE): power output from ergometer/metabolic power output.

Equipment

The seat and back were removed from a 45.7 cm wheelchair and replaced with a custom-built adjustable solid unit. This unit allowed the subjects to modify their position in the chair. A wheelchair dynamometer, based on the design of O'Reagan (15), was constructed to provide a stationary platform for wheelchair propulsion (**Figure 2**).

An alternator assembly and power supply applied a resistance to the front roller of the dynamometer and monitored the force produced at the handrim. The torque applied to the handrims was monitored by a steel arm with one end rigidly attached to the alternator housing and pinned at the other. Two strain gages, mounted on each side of the arm, generated voltage changes when the arm bent. These changes were fed into a signal-conditioning component before being sent to a computer for data acquisition and analysis.

A measurement circuit, consisting of a slotted disk, an optointerrupter module, and a display panel, was constructed to obtain velocity information. The display panel was mounted directly in front of the subject for continuous monitoring of velocity (**Figure 3**).

An AT-MIO-16 data acquisition card, with a Lab Windows® graphical user interface package (National Instruments, Austin, TX), was used to collect and process the strain gage voltages. Data were sampled at 1,000 Hz for 5 s, providing two to six complete propulsion cycles per sampling period. A bandpass Butterworth digital filter was used to eliminate a 3 Hz noise caused by the alternator windings. A Panasonic Digital 5100 videocamera was used to analyze stroke patterns and to provide synchronization for the data signals. A light emitting diode (LED), wired to a port on the data acquisition card, remained on during the data acquisition period to mark this time interval on the videotape.

Oxygen consumption and CO_2 values were mea-ıured by a closed circuit system. Room air was inspired nd passed through an air flow meter connected to a omputer interface box. Exhaled air was delivered to a ıixing chamber via an attached air tube, passing rough an anhydrous $CaSO_4$ desiccant before reaching e O_2 (Applied Electrochemistry Inc., S-3A, Sunnyvale, CA) and CO_2 (Beckman Medical Gas Analyzer, LB-2, Beckman Instruments, Fullerton, CA) analyzers. All phases of data collection, calculation, and display were performed by computer software. The system was calibrated before running each subject.

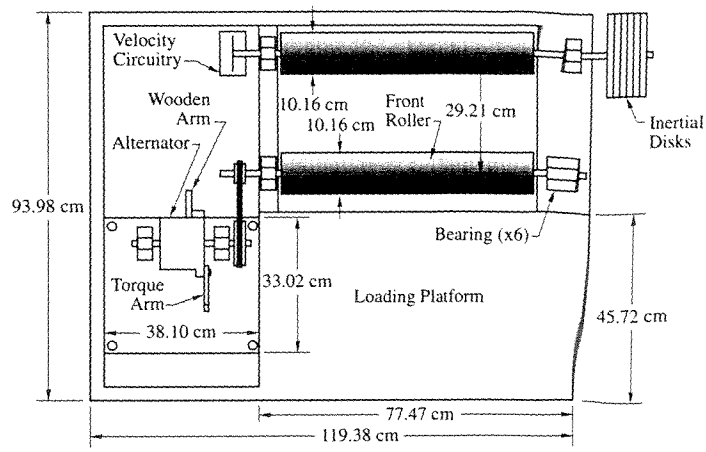

Figure 3.
The dynamometer.

Experimental Procedure

The subject was instructed to propel the wheelchair on the dynamometer for 5 min to become acclimated to the equipment (**Figure 4**). The subjects were allowed to adjust the seat and seat back position during this time period.

Reflective markers were placed on the acromion, lateral epicondyle, and styloid process for the technique analysis. The subject was then attached to the closed circuit system, breathing into the mouthpiece for 2 min before the start of testing to stabilize the O_2 and CO_2 analyzers.

The subject then propelled the wheelchair at a linear velocity of 0.64 m/s for 3 min, followed by an increase to 0.92 m/s for 3 min, then an increase to 1.17 m/s for 3 min. Data were collected during the third minute at each velocity level. The subject rested for 15 min and then repeated the test in reverse order, beginning with 1.17 m/s and ending with 0.64 m/s. Comparison of the velocity orders indicated no significant data differences between the two halves of the trials. Therefore, only data from the first half of a trial were used in the analysis. During the testing periods, the subject's VO_2 and RER were automatically updated every 30 s and displayed.

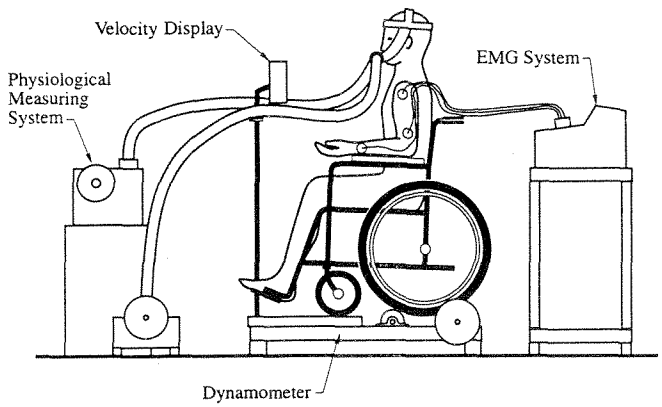

Figure 4.
The experimental setup.

Data Reduction

The VO_2 and RER values acquired during the final minute were averaged for each velocity level. The kcal/min equivalent energy measure for each RER was then obtained from a table (16), multiplied by the VO_2, and converted to watts.

The mean force exerted on the handrims was determined by isolating complete propulsion strokes during each 5 s period. The mean strain gage voltage for each cycle was converted to units of force. The velocity and force obtained for each sample in a cycle were multiplied and averaged to yield the mean power output needed for calculating GPE.

The technique characteristics of PT, RT, CT, PT%, and RT% were averaged over three consecutive cycles. The PT was determined by locating the interval from the point of lowest voltage to the point of peak voltage in the cycle, with the RT occurring from peak voltage to the beginning of the next cycle. The WS was found by multiplying the mean power output by the total CT at each velocity level.

The videotape was analyzed to determine the SA, EA, and PA. These angles were defined relative to the right horizontal through the wheel axle, with 0° directed toward the rear of the wheelchair.

Development of the ANN

A file, containing the following data points for each of the three velocities, was created for each subject:

- Peak VO_2 in l/min
- Peak VO_2 in l/min per kg of body weight
- kcal/min
- HRF in N
- GPE in percent
- PT%
- RT%
- WS in J
- SA
- EA
- PA.

In addition to these 33 inputs, each file contained an output, or target, value indicating whether the data were from a control or a wheelchair user.

Two measures of model performance were used to evaluate each net: model correlation, a statistical measure of how well the model predictions agreed with the targets, and root-mean-squared error (RMS), a measure equivalent to determining the standard deviation of the error in the network's response. These measures were used to evaluate both the development of the net during training and the ability of a trained net to generalize to test-set data. By monitoring the correlation of the training set and RMS histories, determinations can be made regarding the pace of network learning, its general state of convergence to a solution, and whether overtraining is occurring. Overtraining occurs when a net memorizes specific characteristics of the training cases without extracting the underlying patterns in the data. A net that has been overtrained is useless for predicting or classifying any new data set that does not mimic the original training data exactly. For the test set, the correlations and RMS indicate how well a trained network responds to data sets not contained in the training set.

Data for five wheelchair users and five controls were then randomly selected and placed in a file for use in training the net. Due to the small set of samples, two randomly selected subjects from this group were used as a training test set. This test set was used to halt the training process at the point where a net would be able to best generalize to new data sets. The remaining five individuals (three controls, two wheelchair users) were placed in a second file, the validation test set, for testing the resulting network's ability to generalize to data it had not seen before.

The first model, containing all 33 input variables, was then constructed by evaluating several networks in which the size of the hidden layer was varied. The smallest error for the complete model containing all 33 variables was obtained by using a network with a single hidden layer having 10 nodes. Six additional iterations

of net size resulted in a reduction of input data needed for accurate classification from the original 33 variables to a final net containing only 3. The classification portion of the study determined the overall pattern (model) and the resulting contribution of the individual variables that best represented the differences between the groups.

A contribution analysis was performed to identify the individual variables most important to each resulting model. In addition, the sensitivity of each variable in a model was evaluated. A situation is sensitive to a variable if a small change in that variable leads to a proportionately greater change in the results than for similar changes in the other variables. The critical point is the value at which a variable causes an analysis to reverse a decision (from control to wheelchair user, for example). Sensitivity information was obtained by varying each input, one at a time, by adding 5 percent of its value for all training patterns to determine its effect on the output response of the ANN. The change in the output was divided by the change in the input, squared and summed for all patterns. These results were then normalized so that the most sensitive input variable (MSV) had a value of one.

Irrelevant inputs, as determined by the contribution analysis, were then eliminated from the current model, resulting in a smaller input set to the next model. Several network configurations were then evaluated with the one having the best predictive capability being kept. This procedure was used to reduce model size from the original set of 33 inputs while keeping a reasonable level of prediction capability as well as minimizing prediction error.

Qnet V2.03 software (Vesta Services, Winnetka, IL) was used to develop, train, and test the ANN.

RESULTS

In general, a good ANN representation is one that can be described very economically while still containing enough information to perform the required task. In the present study, the series of models is presented to demonstrate the information available as a neural net searches for the best model. In a typical ANN procedure, these intermediate models are not evaluated. However, in the present study, it was felt that analysis of these models might provide some insight into the level of model detail needed to classify wheelchair users accurately.

Classification by the ANN

Each of the nets generated during this procedure correctly classified each subject into the appropriate group based on wheelchair experience. The data patterns from the five additional subjects were then analyzed by each to determine whether that ANN could generalize to data patterns it had never seen. Again, each ANN correctly classified all five subjects, indicating the ability of these networks to generalize training results to previously unseen data (**Table 2**). It is unusual to have all iterations of a network perform this well. However, as this investigation was intended as a feasibility study, the subject groups were intentionally selected to be dissimilar. Due to this approach, the nets did not have any difficulty in separating the groups.

The correlation values for each of the seven models were at least 0.995 in the training set and 0.976 for the test set (**Table 2**), indicating close agreement of the data and the net models. The RMS ranged from 0.0001 to 0.119, again indicating good agreement

Table 2.
Neural net training and testing statistics.

	Model #						
	1	2	3	4	5	6	7
Training Set							
Correctly Classified (%)	100	100	100	100	100	100	100
Correlation	0.999	1.000	1.000	1.000	0.995	0.999	0.998
RMS	0.001	0.0001	0.0004	0.001	0.033	0.012	0.019
Test Set							
Correctly Classified (%)	100	100	100	100	100	100	100
Correlation	0.999	0.997	0.999	0.976	0.999	0.998	0.992
RMS	0.034	0.084	0.045	0.119	0.045	0.017	0.059

between the data and the net models. Correlation coefficients of 1.0, or RMS values of 0.00, do not usually indicate a net having good generalization properties. These values may instead indicate a net that has been overtrained and so will be unable to respond to differing combinations of variables that represent a class. As variations in the characteristics in the membership of any class are to be expected, a great deal of effort must be expended to be sure that the range of possible values and combinations that will describe all members of a class adequately are incorporated into a training set.

The final model with three variables, while not having the best correlation and RMS values, was the most economical representation that correctly classified all the subjects. As an accurate group division becomes more critical or as the groups become more difficult to differentiate, many additional data patterns will be needed. For example, subjects in this study were allowed to select the chair configuration that suited them best. As the importance of wheelchair configuration to propulsive efficiency has been demonstrated (3), it will be important that future ANN studies include data patterns from subjects using chairs that are too wide, too narrow, and so forth, for them. This will incorporate additional unique characteristic patterns for evaluating a user's fit to a chair.

Model Reduction and Key Variables

The series of input patterns used in the development of the sequence of models, and the relative contribution of each input variable to the classification success of the ANN, changed value with each new configuration (**Table 3**).

The reduction of the model from one containing 33 input variables to one consisting of 3, while retaining both predictive accuracy and low predictive error, provides some interesting insights into the effects of experience and training on a user's propulsion characteristics. Surprisingly, as the models included progressively fewer input variables, the physiological factors became less important, until only peak VO_2 at the high velocity remained. Indeed, most of the physiological characteristics were relatively unimportant in differentiating the subject groups from construction of the very first model. Conversely, the technique factors were more important in differentiating these groups of subjects than were the physiological factors. Many of these factors continued to be important throughout model construction, with two technique variables included in the final model consisting of only three factors.

The contribution of a variable to a given model may be productively viewed in two ways: 1) an input having little or no contribution (a low value or drops out of a model) to differentiating the groups indicates a parameter in which data from nonimpaired individuals could be used in wheelchair studies; 2) the largest contributors (a large value or remains in a model) indicate those factors that differentiate either on the basis of injury level/type or wheelchair experience, and so the use of nonimpaired subjects would not be recommended.

The sensitivity analysis revealed that the variables of kcal/min at high velocity (models 1 and 4), GPE at medium velocity (model 2), PA at high velocity (model 3), PT at the medium velocity (model 5), HRF at the low velocity (model 6), and peak VO_2 at the high velocity (model 7) were most sensitive to a change in the experimentally obtained values. That is, if a particular model were selected, one of these variables could conceivably result in an erroneous classification with a small change in its value. This suggests that, when using the variables contained within a specific model, particular attention must be paid to the accuracy and method of collecting these MSV.

SUMMARY

The purpose of this study was to determine the feasibility of using ANNs as a tool for evaluating users and user-wheelchair combinations. An ANN approach, developed by progressively reducing the number of input variables, was trained using features of subject responses to a specific wheelchair use protocol. We have shown how a series of ANNs can be trained on physiological and technique data to achieve high accuracy in differentiating between widely disparate groups of wheelchair users.

Our results imply that the ANN approach could be a useful tool for making finer separations of groups that are more similar in experience or skill, for example:

1. evaluating the progress of world class athletes during training
2. evaluating user response characteristics to differently configured chairs (wheelchair prescription)
3. providing a sophisticated athletic classification system.

Table 3.
The contribution of each variable to pattern classification and model reduction.

Variable	Contribution to Pattern (%) Best Model # 1	2	3	4	5	6	7
Physiological Factors							
Peak VO_2(l/m)							
Low	3.1	5.0	8.7	4.7	—	—	—
Medium	1.5	—	—	—	—	—	—
High	4.2	4.3	14.9	11.0	22.9	24.8	26.1*
Peak VO_2 (l/m/kg)							
Low	1.8	—	—	—	—	—	—
Medium	1.0	—	—	—	—	—	—
High	4.1	2.3	—	—	—	—	—
kcal used per m							
Low	4.0	2.1	—	—	—	—	—
Medium	0.5	—	—	—	—	—	—
High	4.1*	4.3	13.0	9.3*	—	—	—
Gross Propulsion Efficiency (%)							
Low	2.8	2.3	—	—	—	—	—
Medium	2.2	3.4*	—	—	—	—	—
High	5.5	2.5	—	—	—	—	—
Work per Stroke (J)							
Low	2.0	2.4	—	—	—	—	—
Medium	1.0	—	—	—	—	—	—
High	0.5	—	—	—	—	—	—
Technique Factors							
Propulsion Time (%)							
Low	3.2	2.9	—	—	—	—	—
Medium	5.3	4.5	7.0	12.1	18.1*	—	—
High	2.7	8.7	5.4	2.1	—	—	—
Recovery Time (%)							
Low	4.6	3.5	—	—	—	—	—
Medium	5.9	4.6	5.3	—	—	—	—
High	4.4	11.1	3.8	—	—	—	—
Starting Angle (degrees)							
Low	0.6	—	—	—	—	—	—
Medium	0.4	—	—	—	—	—	—
High	7.0	11.3	7.1	20.4	15.6	11.1	—
Ending Angle (degrees)							
Low	0.2	—	—	—	—	—	—
Medium	6.4	5.9	7.2	5.0	—	—	—
High	0.5	—	—	—	—	—	—
Push Angle (degrees)							
Low	0.5	—	—	—	—	—	—
Medium	0.5	—	—	—	—	—	—
High	6.6	7.0	14.6*	11.8	10.6	15.2	24.4
Hand Force on Rim (N)							
Low	8.5	7.7	12.5	26.0	32.8	49.1*	49.5
Medium	4.0	2.3	—	—	—	—	—
High	0.2	—	—	—	—	—	—

Low, medium, and high refer to the test velocities; * = most sensitive variable for a specific model; — = variable not used in model.

This was an exploratory study and did not intend to provide a definitive classification system, but to promote instead the value of ANNs as a tool in some of the above areas. The development of an actual system will require a much larger data set that includes more levels of training, experience, and types of wheelchair use. The information generated by using this expanded ANN approach could be used to focus the development of training techniques on those areas (variables) that would improve most through training. That is, those that change to the largest extent over time or have the largest differences between group levels as determined by use of a net. Another potential use for this technique may be in the development of classification systems to more fairly assign athletes into categories based on multiple factors that might exist in a variety of combinations.

The results obtained here were most encouraging. Future work will incorporate more training patterns containing a wider variety of skills, chair configurations, and lesion levels, to further generalize and extend our results.

REFERENCES

1. Glaser RM, Sawka MN, Laubach LL, Suryaprasad AG. Metabolic and cardiopulmonary responses to wheelchair and bicycle ergometry. J Appl Physiol 1979;46(6):1066–70.
2. McLaurin CA, Brubaker CE. Biomechanics and the wheelchair. Prosthet Orthot Int 1991;15:24–37.
3. Woude LHV van der, Veeger HEJ, Rozendal RH. Propulsion technique in hand rim wheelchair ambulation. J Med Eng Technol 1989;13(1/2):136–41.
4. Stoboy H, Rich BW, Lee M. Workload and energy expenditure during wheelchair propelling. Paraplegia 1971;8:223–30.
5. Veeger HEJ, Woude LHV van der, Rozendal RH. Effect of handrim velocity on mechanical efficiency in wheelchair propulsion. Med Sci Sports Exerc 1992;24(1):100–7.
6. Sanderson DJ, Sommer HJ III. Kinematic features of wheelchair propulsion. J Biomech 1985;18(6):423–9.
7. Veeger HEJ, Woude LHV van der, Rozendal RH. Wheelchair propulsion technique at different speeds. Scand J Rehabil Med 1989;21:197–203.
8. Asato KT, Cooper RA, Robertson RN, Ster JF. SMART^{wheels}: development and testing of a system for measuring manual wheelchair propulsion dynamics. IEEE Trans Biomed Eng 1993;40(12):1320.
9. Cooper RA. The contribution of selected anthropometric and physiological variables to 10K performance of wheelchair racers: a preliminary study. J Rehabil Res Dev 1992; 29(3):29–34.
10. Woude LHV van der, Hendrich KMM, Veeger HEJ, et al. Manual wheelchair propulsion: effects of power output on physiology and technique. Med Sci Sports Exerc 1988;20(1): 70–8.
11. Nussbaum MD, Chaffin DB, Martin BJ. A back-propagation neural network model of lumbar muscle recruitment during moderate static exertions. J Biomech 1995;28(9):1015–24.
12. Sepulveda F, Wells DM, Vaughn C. A neural network representation of electromyography and joint dynamics in human gait. J Biomech 1993;26(2):101–9.
13. Carling A. Introducing neural networks. Wilmslow, UK: Sigma Press; 1992.
14. Smith M. Neural networks for statistical modeling. New York: Van Nostrand Reinhold; 1993.
15. O'Reagan JR. The design of a wheelchair dynamometer (Thesis). Charlottesville, VA: University of Virginia; 1978.
16. McArdle WD, Katch FI, Katch VL. Exercise physiology: energy, nutrition, and human performance. 3rd ed. Philadelphia, PA: Lea and Febiger; 1991.

Submitted for publication July 5, 1995. Accepted in revised form November 27, 1996.