Department of Veterans Affairs

Journal of Rehabilitation Research and Development Vol. 35 No. 2, June 1998
Pages 192–200

Sensing stability and dynamic response of the F-Scan in-shoe sensing system: A technical note

Tadashi Sumiya, MD; Yoshitaka Suzuki, Eng; Tomio Kasahara, Eng; Hajime Ogata, MD
Department of Rehabilitation, Hamamatsu Rosai Hospital, Hamamatsu, Japan; Department of Rehabilitation Medicine, University of Occupational and Environmental Health, Kitakyushu, Japan; Rosai Rehabilitation Engineering Center, Nagoya, 455, Japan

Abstract—The objective of this study was to gain a better understanding of the F-Scan to determine its appropriate clinical application. Vertical pressure was applied to a sensor foil over the range of 10–80 kPa with or without the intervention of 0.2–0.8 mm thick felt. Sensor sensitivity reached a maximum without the felt, and decreased with increasing felt thickness, stabilizing at 48–74% of the maximum level when felt thickness exceeded 0.4 mm. This sensitivity change was caused by the slight difference in thickness of sensing areas from that of non-sensing areas. Dynamic response time was delayed by a mean of 0.32 s. Although the cause of this dynamic response delay remains unclear, it was considered to be inappropriate for accurate dynamic measurements. Therefore, rather than using F-Scan measurement to accurately obtain actual values, it should be used for relative comparisons of the plantar pressure distributions under constant conditions.

Key words: *foot, gait analysis, insole sensors, orthotic devices, plantar pressure.*

INTRODUCTION

The F-Scan in-shoe sensing system (Tekscan, Inc., Boston, MA) displays pressure distribution between the sole and the insole by using a 0.15 mm sensor foil placed inside the shoe (1). Although this epoch-making device has many areas of clinical application (2), there are many unresolved questions regarding with this system and other in-shoe sensing systems (3–8).

According to the manufacturer, the sensor accuracy level was less than ±5 percent of the range with calibration, the rise time of the sensor was 5 μs[1]. Furthermore, F-Scan version 3.611 or later has adopted a special calibration procedure to compensate for differences between the F-Scan's force values and the vertical component of the floor reaction force measured by the Kistler force plate less than ±10 percent at any walking velocity without force plate measurements (9,10).

The high accuracy level of this sensor may be preferable for common clinical tests, but the specific conditions under which this high accuracy is valid remain unclear. The fast rise time of the sensor may be very effective in all sorts of dynamic measurement, but our clinical experiences have shown that the F-Scan tends to underestimate the actual force values in normal walking; this tendency has suggested a relatively slow dynamic response compared to force plates. The unreliability of F-Scan's second peak force values also has been pointed out by other researchers (8). Although detailed information on the mechanism of the special calibration procedure (the Baumann compensation) is unavailable, bipedal recordings of a minimum of six steps (three lefts, three rights) must be made for this

This material is based upon work supported by the The Japanese Labor Welfare Corporation.

Address all correspondence and requests for reprints to: Tadashi Sumiya, MD, Department of Rehabilitation Medicine, Hamamatsu Rosai Hospital, 25 Shogen-cho, Hamamatsu-city, 430-0802, Japan.

[1]Corporate Capabilities. Tekscan, Inc., 1990.

extended calibration to be activated[2]. Moreover, the manufacturer has not exhaustively described the influence on sensitivity of the material in contact with the sensor foil.

Such information is essential for clinical application of the F-Scan and the correct interpretation of the data. The objective of this study was to examine the characteristics of the F-Scan system that have not been well described and to gain a better understanding of the device. To accomplish this objective, the most ideal approach would be a comparison of the F-Scan with another in-shoe sensing system, in which a high level of accuracy had been already established under conditions where both sensors are similarly inserted into the shoe. However, only a relative comparison can be made under the present circumstances because none of the existing in-shoe sensing systems have a sufficiently high accuracy (8). For this reason, this study was mainly aimed at evaluating the accuracy of the F-Scan through an investigation of the basic physical properties of the sensor: 1) the influence of material hardness in contact with the sensor foil on sensitivity; and 2) the dynamic response time to loads. In addition, the force output of the F-Scan was compared with the vertical component of the floor reaction force measured by the Kistler force plate to observe the tendency of the F-Scan to underestimate force values.

METHODS

Laboratory Experiments

The equipment used in the laboratory experiments was the F-Scan, version 3.42. This software version was very useful for certifying the basic functions of this system free of interference by special calibration procedure (the Baumann compensation) adopted in version 3.611 and later (9,10). The sensor foil used (model No. 052992) had a preset sensitivity range of 3–30 kgf/cm^2 (300–3,000 kPa), the only available sensitivity range of the F-Scan sensor foil presently provided by the manufacturer.

Since this device was introduced to our institution mainly to investigate plantar pressure distribution pattern of Japanese individuals with neurological dysfunction during normal level walking, the appropriate experimental pressure range was decided based on the common Japanese physical build and experience in force plate measurements. The typical large Japanese male weighs about 70 kg and wears 26-cm-size shoes; he has a contact area of about 100 cm^2 with each sole. The maximum vertical force produced during normal level walking generally reaches about 120 percent of body weight in the single-limb-support phase. Therefore, a rough estimate of the maximum normal pressure would be $70 \cdot 1.2/100 = 0.84$ kgf/cm^2 (82 kPa). In this study, a combination of a 5-cm diameter wooden disk (area 19.6 cm^2) and eight 2-kg weights was used to create eight-staged pressure loads from 2 kgf/19.6 cm^2 (10 kPa) to 16 kgf/19.6 cm^2 (80 kPa).

An original pressure-loading device developed for this experiment was anchored on a firm floor with two 20-kg weights (**Figure 1**). The sensor foil was placed horizontally on a flat metal board with the wooden disk on top of it at a room temperature maintained at 20 °C. It was decided to locate the wooden disk on the anterior foot region of the sensor foil after having confirmed the uniformity of the sensor sensitivity over the anterior, middle, and posterior regions in preliminary experi-

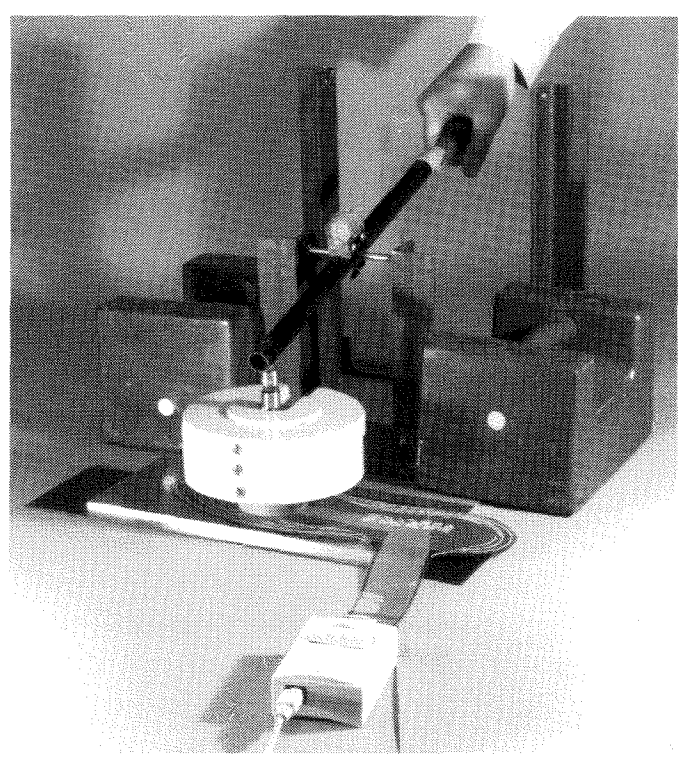

Figure 1.
The original device developed for weight loading. Pressure was applied manually to the anterior foot region of a sensor foil by dropping weights onto a wooden disk from a 3-mm height.

[2]Calibration of F-Scan Version 3.611 or later. Douglas J. Stewart, PhD. Tekscan, Inc., August 1993.

ments. A lever was used to drop the weight onto the disk from a 3-mm height. Through this technique of weight dropping from a low height, acceleration due to gravity minimally influenced the force at the time of impact, and production of shear force was almost completely prevented. The upper disk surface was kept bare to transmit the applied force directly to the lower disk surface. The hardness (the degree of deformation at the time of impact) of the lower disk surface was altered by attaching 0.2, 0.4, 0.6, and 0.8 mm thick felt to investigate the influence of the material in contact with the sensor foil on sensitivity. Felt, a non-woven fabric, was selected as an appropriate material with which to alter surface hardness without influencing the sensor sensitivity by textile structure.

Recording was started just before dropping the weight and stopped at 1.6 seconds, with sampling frequency at 100 Hz, to trace the dynamic response as accurately as possible. Although the most desirable sampling frequency must be higher than 200 kHz for detecting the fast rise time (5 μs), 100 Hz was the highest sampling frequency available for users of the present F-Scan system. The output was obtained in raw units without calibration. Measurements were made 20 times at each pressure load and felt thickness and averaged under each condition.

Gait Analysis

The accuracy of the force value of the F-Scan was examined by comparing it with the vertical component of the floor reaction force measured by the Kistler force plate, the accuracy of which has been already accepted worldwide. Two sensor foils were affixed with thin adhesive tape to the soles of both feet of a nonimpaired 74-kg adult male. This 0.088 mm thick adhesive tape (Nicetack®, Nichiban Co., Tokyo, Japan), made of bonded paper fibers with adhesive on both sides, was an appropriate material as it lacked possibly confounding textile structure. The subject walked shoeless on the force plate at a comfortable speed, with room temperature maintained at 20°C. Synchronous recording by the F-Scan and the force plate was made for 2, 3, and 5 s, with a sampling frequency at 100 Hz for both devices. This sampling frequency was considered to be appropriate to observe force versus time curves during normal walking. Calibration of the F-Scan was performed before each measurement by having the subject stand on one leg over the force plate to equalize the temperature of the sensor foils with that of the foot/force plate interface during measurements. Thus, the instability of sensitivity due to temperature drift has been suppressed as much as possible.

In this analysis, two versions of F-Scan software, 3.42 and 3.622, were used to observe the effect of the Baumann calibration procedure adopted in the newer version (9,10). Measurements were performed three times under each of the following conditions: 2 s, recording with version 3.42; 2, 3, and 5 s with version 3.622.

The total force values of the F-Scan were plotted against time, together with the vertical component of the floor reaction force measured by the force plate. The force/time curves of both devices were compared by analyzing the time from heel strike to the first and the second peaks (expressed as percentages to each stance phase duration) and their force values.

RESULTS

Laboratory Experiment

No bounce was caused by the weight-dropping procedure from a 3-mm height, but a fine vibration of the weight on the upper disk surface at the time of impact did result. No deformation was observed on either side of the wooden disk after the weight dropping.

The hardness of the lower disk surface influenced the sensor sensitivity (output per pressure load) considerably, but the magnitude of pressure load did not correlate with the sensor sensitivity (**Figure 2**). The highest sensor sensitivity was yielded by both the disk surface without felt attachment in six of eight pressure loads and by that with 0.2 mm felt in other pressure loads. However, sensitivity decreased with increasing felt thickness, and stabilized at approximately the lowest level when felt thickness exceeded 0.4 mm. The lowest sensitivity had a mean of 62 percent (range, 48–74 percent) of the highest sensitivity.

The output values displayed flutter at the time of impact and then shifted to a steep slope, ending at about 0.3 to 0.4 s (**Figures 3** and **4**). However, the output continued to rise gently even more than 1 s after weight loading (creeping). For this reason, the mean output value from 1 to 1.6 s was regarded as representing the stable state. The dynamic response time of the sensor was determined by measuring the interval between weight loading and the time when 90 percent of the

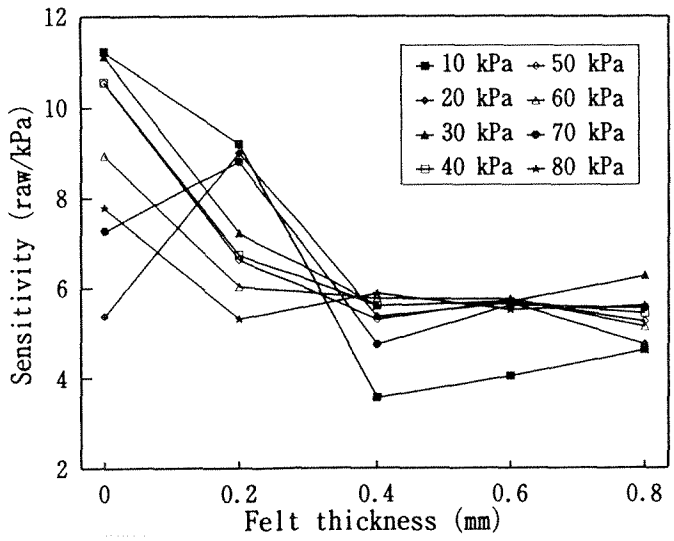

Figure 2.
The effect of felt thickness on the stable state of the F-Scan output (the mean output value from 1 to 1.6 s after weight loading). The sensitivity (output per pressure load) showed the highest level without the felt or with the thinnest felt, but decreased with increasing felt thickness and almost stabilized at the lowest level when felt thickness exceeded 0.4 mm in all pressure loads.

stable state was attained. The dynamic response times thus obtained were 0.36, 0.41, 0.24, 0.29, and 0.31 s (mean 0.32 s) when felt thickness was 0, 0.2, 0.4, 0.6 and 0.8 mm, respectively (**Table 1**). Although the dynamic response time was much shorter with 0.4 mm felt than without felt, neither the thickness of the felt nor the magnitude of the pressure load had any consistent influence on the dynamic response time.

Gait Analysis

The force plate always recorded one gait cycle (the bilateral stance phase) under every condition. The average number of gait cycles recorded by the F-Scan per measurement was one, two, and three when recording duration was 2, 3, and 5 s, respectively.

Figure 5 shows the typical force/time curves of the F-Scan and the force plate. The force values of the F-Scan yielded two-peaked curves but did not always coincide with the vertical component curves of the floor reaction force. **Table 2** shows the time from heel strike to the first and the second peaks and their force values. The F-Scan almost always required from 11 to 17 percent longer to reach the first peak but gave values almost equivalent (between 93 and 101 percent) to the vertical component of the floor reaction force. However, the F-Scan showed almost equal second peak time (between 96 and 103 percent), but 14 to 17 percent lower values than the force plate. The degree of underestimation of the force values at the second peak exceeded the accuracy range (±5 percent) announced by the manufacturer.

The newer F-Scan version, 3.622, tended to provide times from heel strike to the first and second peaks and force values similar to those of version 3.42. While 5-s recording enabled bipedal reading of more than six steps (three lefts, three rights) in version 3.622, the first and the second peaks did not consistently show force values closer to the floor reaction force than those obtained from 2- or 3-s bipedal recordings of four steps or fewer. Neither the software versions nor the recorded number of steps consistently showed positive correlation with the differences between the peak force values of the two devices.

DISCUSSION

The F-Scan sensor foil consists of over 1,000 sensing cells in a conductive grid of rows and columns containing a pressure-sensitive semi-conductive ink layer, sandwiched between two sheets of polyester film (1). When force is applied, the resistance of the ink layer decreases in proportion to the magnitude of the force. Because of its layered structure, the sensing areas are 0.02 or 0.04 mm thicker than the non-sensing areas (**Figure 6**). As a result, by concentrating the full load upon the sensing areas, the hard disk surface created larger outputs than the soft disk interfaces. Moderate softness of the disk surface stabilized the output by evenly distributing the load over the entire sensor foil surface.

Since the hardness of insoles and soles varies, the use of sensor foils alone can produce unstable sensitivity. This problem can be improved by placing appropriate material on both sides of the sensor foil. Although 0.4–0.8 mm felt worked as a sensitivity-stabilizer in this study, the most appropriate quality and thickness of the material remains unclear and should be investigated through various tests including mechanical compression. The attachment to both sides of the sensor foil can also prevent mechanical tearing as a result of creasing and help prolong its useful life. Conducting calibrations during actual use can compensate for the decrease in raw output with the attachment of soft material.

The mean dynamic response time of the F-Scan obtained in this study (0.32 s) was markedly longer than

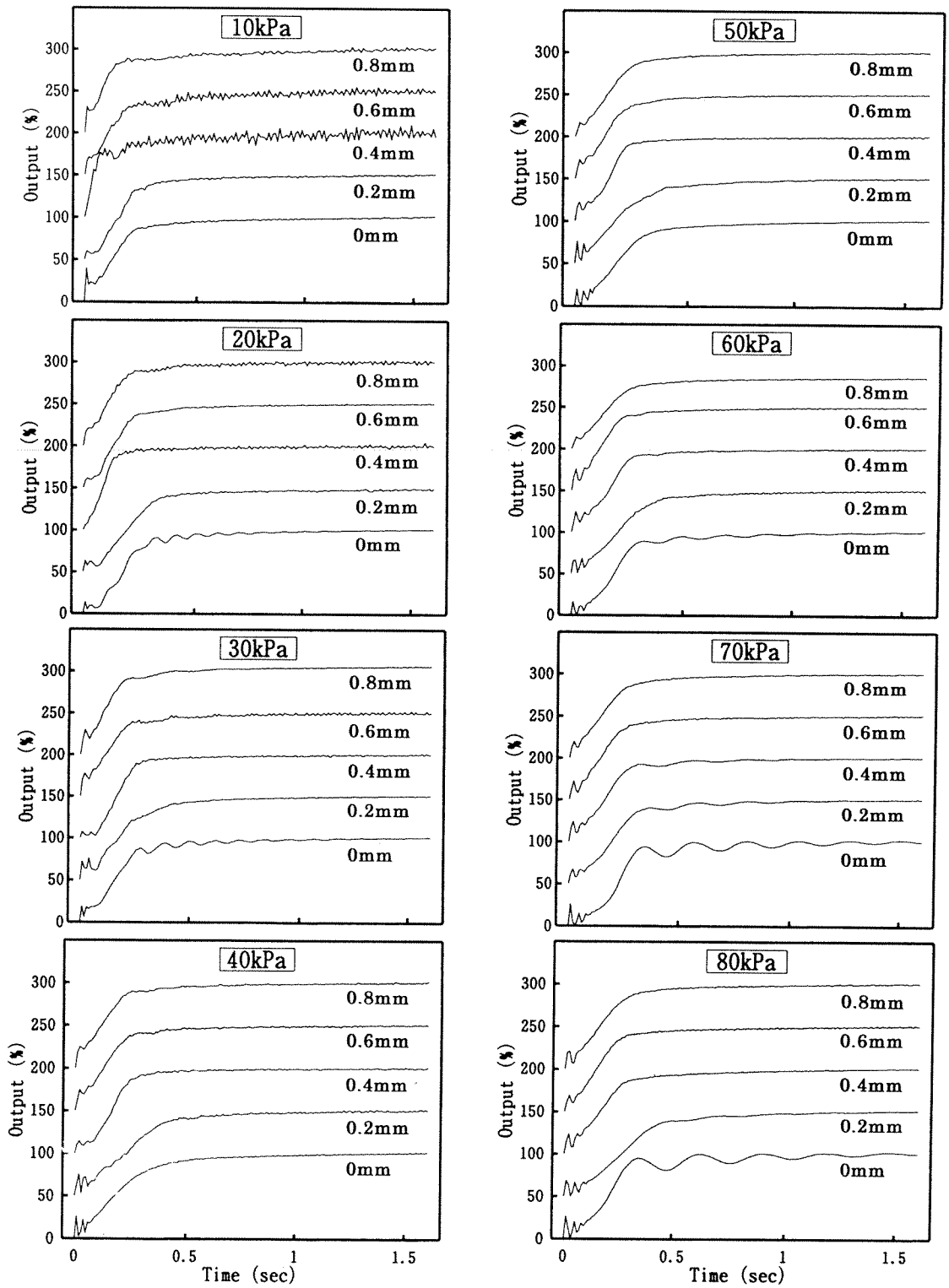

Figure 3.
The F-Scan output was expressed as percentages to the stable state (the mean output value from 1 to 1.6 s) under various pressure loads and felt thickness. The baseline level of the output was set at 0 percent without the felt, 50 percent with 0.2 mm, 100 percent with 0.4 mm, 150 percent with 0.6 mm, and 200 percent with 0.8 mm felt.

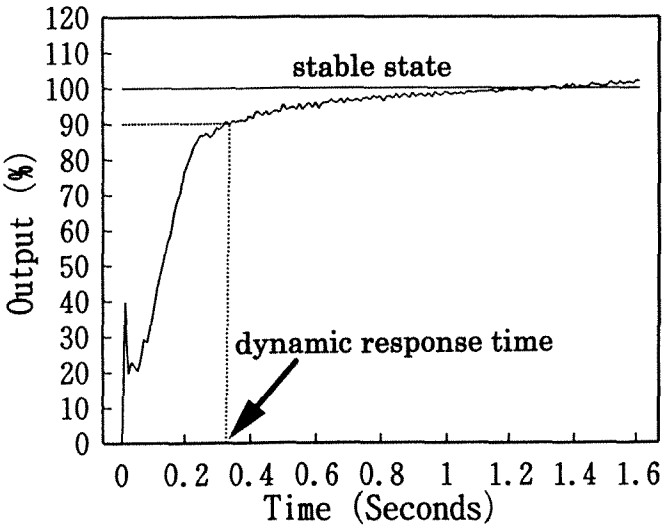

Figure 4.
The dynamic response time of the F-Scan sensor was determined by measuring the interval between weight loading and the time when 90 percent of the stable state was attained. This output curve was obtained when 10 kPa pressure was applied to the sensor foil without felt attachment.

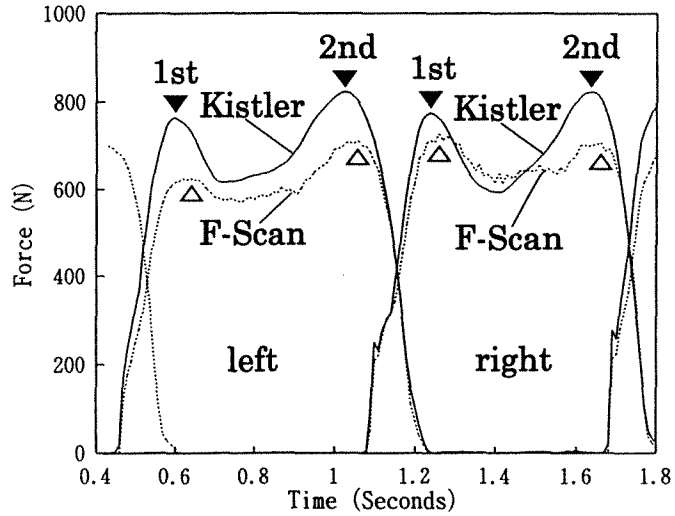

Figure 5.
Typical force/time curves obtained from synchronous recording of the F-Scan (version 3.42; white triangles) and the Kistler force plate (black triangles).

Table 1.
The dynamic response time of the F-Scan sensor under various conditions.

Pressure load (kPa)	Felt thickness (mm) 0	0.2	0.4	0.6	0.8
10	0.31	0.34	0.24	0.37	0.38
20	0.32	0.35	0.16	0.31	0.23
30	0.36	0.41	0.13	0.23	0.31
40	0.43	0.45	0.28	0.27	0.25
50	0.39	0.41	0.22	0.3	0.31
60	0.44	0.41	0.28	0.25	0.3
70	0.31	0.36	0.29	0.29	0.32
80	0.31	0.53	0.35	0.29	0.34
Mean	0.36	0.41	0.24	0.29	0.31

Time is shown in seconds. The dynamic response time was determined measuring the interval between loading and the time when 90% of the stable state was attained (**Figure 4**). The mean dynamic response time overall was 0.32.

the rise time announced by the manufacturer (5 μs). Three factors may have contributed to this: 1) the pressure loads (range, 10–80 kPa) were extremely low, compared to the preset sensor sensitivity range (300–3,000 kPa); 2) the fine vibration at the time of impact prevented smooth output rise; and 3) the polyester film sandwiching the sensor stretched in response to the pressure load and resulted in the releasing of the internal pressure of the sensor foil. These are discussed below. Neither intervention of felt attachment nor viscosity of the wooden disk was included in these factors, because the dynamic response was free from the influence of felt thickness and no deformation was observed on both sides of the wooden disk.

The relatively low pressure loads (10–80 kPa) used in this study compared to the preset sensor sensitivity (300–3,000 kPa) created an imperfect response in the sensor; this mechanism probably yielded the long delay in dynamic response. Based on the estimations made in the Methods section, a nonimpaired subject of 100 kg with a single sole area of 100 cm^2 can produce a maximum vertical floor reaction force equal to about 120 kPa during normal walking. The extremely high level of the preset sensor sensitivity of the F-Scan may be appropriate for detecting local high plantar pressure due to foot deformity, or detecting high plantar pressure during special activities such as running or jumping. Nevertheless, an accurate measurement of plantar pressure during normal walking is essential for the clinical application of the in-shoe sensing device and the F-Scan sensor must be preset for this purpose.

The artificial loading operation was a certain cause of short delay in the dynamic response of the sensor. The dropping of weights onto the small area of the upper disk surface produced a fine vibration, resulting in output flutter during the initial rise (**Figures 3** and **4**).

Table 2.
The time from heel strike to the first and second peaks and their force values obtained from the synchronous recording of normal gait by the F-Scan and the Kistler force plate.

F-Scan				
Version	**3.42**	**3.622**	**3.622**	**3.622**
Recording duration (s)	**5**	**5**	**3**	**2**
1. First peak				
Time				
F-Scan mean (%)	28.5	28.9	26.7	27.6
SD (%)	2.65	2.01	2.26	1.98
Kistler Mean (%)	24.5	24.7	23.8	25.0
SD (%)	3.03	1.41	1.92	2.40
Ratio F-Scan/Kistler	1.17	1.17	1.13	1.11
Force				
F-Scan Mean (N)	747	674	716	679
SD (N)	72.5	53.1	61.7	41.9
Kistler Mean (N)	739	722	739	732
SD (N)	19.8	26.9	28.0	20.5
Ratio F-Scan/Kistler	1.01	0.93	0.97	0.93
2. Second peak				
Time				
F-Scan Mean (%)	75.0	72.7	77.0	74.6
SD (%)	5.94	7.17	1.34	1.61
Kistler Mean (%)	75.8	76.1	74.8	75.4
SD (%)	0.19	2.96	1.48	1.74
Ratio F-Scan/Kistler	0.99	0.96	1.03	0.99
Force				
F-Scan Mean (N)	675	649	681	662
SD (N)	40.1	29.6	39.7	44.3
Kistler Mean (N)	793	784	789	786
SD (N)	28.8	13.4	13.8	15.4
Ratio F-Scan/Kistler	0.85	0.83	0.86	0.85

Time is expressed as percentages to each stance phase duration (100%). The F-Scan force indicates total force values (the sum of the pressures detected by each sensing cell times the area of the cell). The Kistler force indicates the vertical component of the floor reaction force.

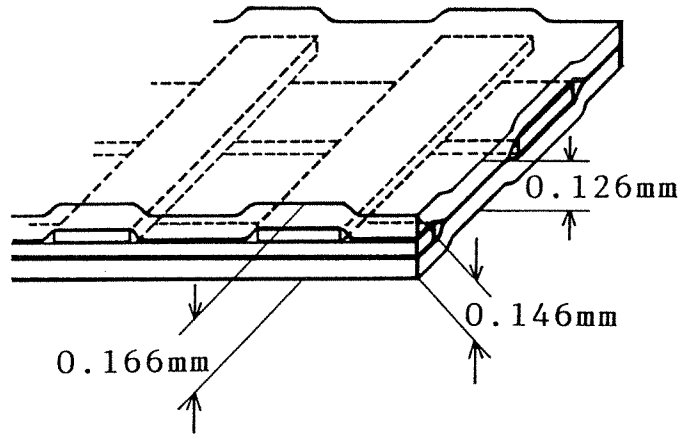

Figure 6.
The layered structure of the F-Scan sensor foil and its uneven thickness.

Even so, the dynamic response takes as long as about 0.2 s, because the output flutter subsides at about 0.1 s.Moreover, the gentle gradient of the output rise after the initial flutter, followed by long-lasting creeping, clearly suggests a slow dynamic response.

The stretched polyester film sandwiching the grid and the semi-conductive ink may have also delayed the dynamic response of the F-Scan sensor, but this was not proven experimentally. A smooth increase in the semi-conductive ink pressure at the time of impact can be prevented when the polyester film is stretched by the applied force. The plasticity of materials can markedly influence the sensor properties, though detailed information regarding the F-Scan sensor material is not available. The plasticity of the semi-conductive ink can also play an important role in delaying dynamic response or in creating creeping of the F-Scan output-.The influence of creeping on the accuracy of actual values can be minimized by conducting calibration as frequently as possible, whereas the effect of plasticity on dynamic response depends on the plastic quality.

Therefore, we concluded that the fast rise time (5 μs) of the F-Scan sensor announced by the manufacturer may not be apparent in actual use, although the cause of dynamic response delay in this study remains unclear. The slow dynamic response of the sensor generally makes the recorded force values lower than the actual values throughout the stance phase of walking, because the force applied to each sensing cell tends to fade before the output reached the maximum level. Thus, the F-Scan sensor should be modified to enable an accurate measurement of actual force in normal walking by reforming the range of the preset sensitivity or improving the quality of the plastic materials. Otherwise, the present F-Scan system can only be used for the relative comparison of plantar pressure distributions under constant conditions.

Temperature instability due to walking barefoot may have slightly influenced our results, but was minimal because calibration was performed with the subject standing on the force plate before each measurement to equalize the sensor temperature to that during measurement.

The delay of the F-Scan in the first peak time and underestimation of the second peak force during walk-

ing arose from the slow dynamic response and other factors. The in-shoe sensor generally detects shear forces in addition to the normal force (6), and the recorded value reflects a combination of both forces with a variable time from heel strike to the peaks. Therefore, the force value of the F-Scan can theoretically be higher than the vertical component of the floor reaction force when they are measured synchronously under barefoot conditions. Although the sample size of only one subject in this study is not sufficient to permit conclusions to be made with confidence, the delay in the first peak time may have arisen from the delay in the first peak time of the shear force component, and its underestimation of the second peak force values may have come from the dynamic response delay of the sensor; the failure of the Baumann compensation also may have contributed to the latter in version 3.622.

We believe that the proper clinical application of the F-Scan and the correct interpretation of the data can be achieved by a clear understanding of the present problems of the sensor discussed above. However, the Baumann compensation should not be accepted, because the F-Scan's force is not theoretically equivalent to the vertical component of the floor reaction force as mentioned above, and is always influenced by the insole and in-shoe pressure resulting from tight lacing of the shoe in actual use.

Based on these considerations, rather than using F-Scan measurement to accurately obtain actual values, it should be used for relative comparisons of the plantar pressure distributions during normal walking under constant conditions. It is valid for the evaluation of the fit of various footwear in those with normal sensations over the plantar surface, because successful redistribution of plantar pressure can be certified in part subjectively and in part by the 2-D or 3-D display of the F-Scan. On the other hand, more reliable devices are necessary to detect the areas critical for foot ulcers and to fit the footwear in persons with neuropathic insensitive feet (11), because a sufficient degree of pressure relief over the critical areas depends greatly on objective medical examinations, particularly in-shoe pressure measurements during walking. Although most of the clinicians seem to be accepting the present in-shoe sensing systems that have about a 10 percent margin of error, they are not standing on a solid scientific footing concerning management of plantar pressure over the area critical for foot ulcers. Improvement of in-shoe pressure sensitive devices may give a more definite basis for the prescription and fit of foot orthoses.

Future studies should be aimed at determining the most suitable material for stabilizing the sensor sensitivity, at clarifying the accuracy with confidence by increasing the number of subjects in gait analysis, and at demonstrating the effect of shear forces on output to gain a better understanding and higher validity of the F-Scan system.

CONCLUSION

The F-Scan sensor was characterized by variable sensitivity, depending on material hardness and by a substantial delay in dynamic response. Its sensitivity decreased as the felt in contact with the foil increased in thickness, and stabilized at the lowest level (62 percent of the highest level, on average) when felt thickness exceeded 0.4 mm. This finding encouraged future investigations of the most appropriate material as a sensor sensitivity-stabilizer. Although the specific cause of the dynamic response delay observed in this study remains unclear, contributing factors may include: 1) the extremely high pressure range (300–3,000 kPa) of the preset sensor sensitivity, compared to the required pressure range for normal walking (approximately less than 120 kPa); 2) the fine vibration of the weight at the time of impact; and 3) the plasticity of the polyester film and the semi-conductive ink.

The F-Scan yielded a delay (11–17 percent) in the first peak time and underestimated (14–17 percent) the second peak force compared to the vertical component of the floor reaction force that was synchronously measured by the Kistler force plate during unshod normal walking. These findings were considered to indicate that the sensor was sensitive to various forces and slow in dynamic response. Moreover, the function of the Baumann calibration procedure adopted in version 3.611 or later was demonstrated to be inconsistent and theoretically unacceptable. Therefore, rather than using F-Scan measurement to accurately obtain actual values, it should be used for relative comparisons of the plantar pressure distributions under constant conditions; use of this device is indicated in persons with a sound sensation over the plantar surface. The improvement of its properties, especially its dynamic response and preset range of sensor sensitivity, will help establish a more definite scientific basis for foot pressure management, enhancing the clinical validity of this system.

REFERENCES

1. Frederick EC, Hartner KP. The evolution of foot pressure measurements. Sensors 1993;June:30–5.
2. Young CR. The F-Scan system of foot pressure analysis. Clin Podiatr Med Surg 1993;10:455–61.
3. Hughes J, Pratt L. Reliability of pressure measurement: the EMED F system. Clin Biomech 1991;6:14–8.
4. Zhu H, Harris GF, Wertsch JJ, Tompkins WJ, Webster JG. A microprocessor-based data-acquisition system for measuring plantar pressure from ambulatory subjects. IEEE Trans Biomed Eng 1991;38:710–4.
5. Wertsch JJ, Webster JG, Tompkins WJ. A portable insole plantar pressure measurement system. J Rehabil Res Dev 1992;29(1):13–8.
6. Cavanagh PR, Hewitt FG, Perry JE. In-shoe plantar pressure measurement: a review. The Foot 1992;2:185–94.
7. Lord M, Hosein R. Pressure distribution by molded inserts in diabetic footwear: a pilot study. J Rehabil Res Dev 1994;31(3):214–21.
8. McPoil TG, Cornwall MW, Yamada W. A comparison of two in-shoe plantar pressure measurement systems. Lower Extremity 1995;2:95–103.
9. Baumann W, Krabbe B, Farkas R. The application of in-shoe pressure distribution measurements in the controlled therapy of diabetes patients. Vidi Berichte 1992;940:413–9.
10. Baumann W, Muller N, Brust. Basic terms and aspects of use of electronic pressure distribution measurement under the foot. Med Orthop Tech 1994;114:6–13.
11. Duckworth T, Boulton AJM, Betts RP, Franks CI, Ward JD. Plantar pressure measurements and the prevention of ulceration in the diabetic foot. J Bone Joint Surg 1985;67-B:79–84.

Submitted for publication January 25, 1996. Accepted in revised form January 3, 1997.