Department of Veterans Affairs

Journal of Rehabilitation Research and Development Vol. 37 No. 1, January/February 2000
Pages 81–88

A technique for quantifying the response of seated individuals to dynamic perturbations

Derek G. Kamper, PhD; Thomas C. Adams, MA; Steven I. Reger, PhD; Mohamad Parnianpour, PhD; Kamran Barin, PhD; Maureen A. Linden, MS

Biomedical Engineering Center, Ohio State University, Columbus, OH 43210; Sensory Motor Performance Program, Rehabilitation Institute of Chicago, Chicago, IL 60611; Department of Rehabilitation Medicine, Cleveland Clinic Foundation, Cleveland, OH 44195; Department of Industrial Systems Engineering, Ohio State University, Columbus, OH 43210; Department of Otolaryngology, Ohio State University, Columbus, OH 43210; Department of Rehabilitation Technology, Helen Hayes Hospital, West Haverstraw, NY 10993

Abstract—A technique is presented for monitoring the seated postural stability and control of human subjects. Estimates are made of the locations of the subject's center of pressure (CP_S) and projection of the center of mass (CM_{NP}) from moment balance equations using measured force and acceleration data. The CP_S and CM_{NP} indices describe the stability of the subject, independent of the chair, even in the presence of perturbations. The measurement system was evaluated for both rigid objects and human subjects situated in a wheelchair undergoing displacement. Estimated CM_{NP} was within ±5 mm of the actual value for static loads. For human subjects, the average correlation coefficient between the estimated CM_{NP} signal and that computed from video data was 0.90; however, transient overestimation of displacement was seen during subject acceleration. The technique could help to better assess seated stability in dynamic environments, such as those experienced by wheelchair users in motor vehicles.

Key words: *center of mass, center of pressure, seating, stability.*

INTRODUCTION

As with standing, postural control during sitting is integral to task execution. The moments created along the spine by the task must be withstood in order to provide a stable base for upper limb functions. Diminished motor control of the trunk and lower limbs hinders the performance of upper limb activities. One study demonstrated that the maximum distance that a seated individual can reach increases as the number of feet in contact with the ground increases from zero to one to two (1). Spinal cord injury has been shown to reduce the maximum distance of reach (2), increase the time needed to complete a task (3), increase the reaction time (4), and decrease the generation of arm power (5).

Postural control must also compensate for externally applied forces. For example, the inertial forces inherent to braking and turning in a motor vehicle generate moments about the joints of the spine and pelvis. For the traveler to remain upright, these moments must be counteracted. In addition to the comfort and fatigue issues faced by travelers with disabilities in maintaining seated balance, safety

This material is based on work supported by the Center for Automotive Research at Ohio State University and by a Presidential Fellowship from Ohio State University.

Dr. Kamper is now with the Sensory Motor Performance Program, Rehabilitation Institute of Chicago, Chicago, IL 60611. Dr. Reger and Mr. Adams are with the Department of Rehabilitation Medicine, Cleveland Clinic Foundation, Cleveland, OH 44195. Dr. Parnianpour is with the Biomedical Engineering Center, Ohio State University, Columbus, OH 43210 and the Department of Industrial Systems Engineering, Ohio State University, Columbus, OH 43210. Dr. Barin is with the Biomedical Engineering Center, Ohio State University, Columbus, OH 43210 and the Department of Otolaryngology, Ohio State University, Columbus, OH 43210. Ms. Linden is with the Department of Rehabilitation Technology, Helen Hayes Hospital, West Haverstraw, NY 10993.

Please address all correspondence and requests for reprints to: Derek Kamper, PhD, Sensory Motor Performance Program, Rehabilitation Institute of Chicago, 345 E. Superior St., Suite 1406, Chicago, IL 60611 Phone: (312)908-5828; fax (312)908-2208; email: d-kamper@nwu.edu

concerns also exist for both passengers (6,7) and drivers (8,9).

Assessment of seated postural control could aid in targeting therapeutic interventions and in answering questions regarding the comparative stability afforded by various seats and the efficacy of different supports. An impedance to proper assessment is the difficulty in quantifying the stability and postural control of seated individuals in a dynamic environment. One technique used in past studies involves monitoring the opening and closing of contact switches affixed to the chair (10,11). Another method, prevalent in the examination of the effects of vibration, involves the measurement of the output acceleration of the subject for a given input acceleration to the seat-subject system (12,13). However, for both of these measures, the relation of the measured quantities to stability is indirect at best and often unclear.

Research in standing posture and balance has been conducted for over 60 years (14–16). In this field, movement of the center of pressure (CP) of the individual has been widely used to quantify postural stability (16,17). Motion of the CP provides a direct, continuous measure of balance that can be easily computed because only measurements of ground reaction forces are required (18). For this study, the concept of CP measurement was extended for the evaluation of seated postural stability.

Previous studies have looked at the motion of the CP for individuals seated in chairs (19,20). However, the research was performed in a static environment and movement of the combined CP of both the chair and the subject, at the interface between the chair and the floor, was analyzed. This paper describes techniques developed for the estimation of the locations of the CP and center of mass (CM), for the subject alone, in a plane at the level of the wheelchair seat. The instrumentation required by the algorithm is sufficiently portable and robust to be used in dynamic environments either in a laboratory on a tilt platform or inside a moving vehicle. Efficacy and limitations of the methodology are examined through experiments with both static loads and human subjects situated in a manual wheelchair.

METHODS

Center of Pressure for Seated Individuals

Many of the concepts endemic to CP usage in standing stabilometry must be modified for the seated situation. For example, with standing, the CP can be computed directly from forces measured at the level of the surface supporting the individual. The addition of a chair, however, complicates matters; the forces recorded at the support surface now relate to the stability of the combined chair-subject system with respect to the surface of support. The height of the chair, for example, could affect the CP location calculated from forces measured between the chair and the ground. To focus on the response of the subject with respect to the seat, location of the CP was chosen to reside at the height of the seat in a plane parallel to the support surface, rather than at the support surface. The CP was determined for the subject alone, not for the subject-chair system. The resulting index, CP_S, essentially represents the removal of the effects of the chair from the CP computed from ground reaction forces.

CP motion is studied because the ultimate goal of any control strategy is to keep the individual stable. When CP excursion exceeds the base of support (the contact area between the individual and the support surface), the individual will fall. Intuitively, postulation of a strategy for maintaining balance by keeping the CP position centered in the base of support is appealing. However, in reality, multiple postural control strategies certainly exist. Forces applied to the subject in a direction parallel to the support surface (e.g., as occurs during braking) produce movement of the CP without any motion of the subject with respect to the seat (21). One of the other possible control strategies entails keeping the CM stationary with respect to the seat in spite of this movement of the CP. Although the distance between the CP and the edge of the base of support decreases in this strategy, no mechanical work is performed by the subject. In addition, the subject maintains his/her orientation with the chair. This strategy is especially appropriate for driving, since the driver must maintain alignment with the steering wheel and windshield to perform optimally. To be able to examine utilization of the postural control strategy in which the CM is kept stationary, an algorithm was developed for the estimation of the projection of the subject's CM normal to a plane parallel to the support surface at the height of the seat. This projection, termed CM_{NP}, provides a quantification of subject movement with respect to the seat.

CP_S and CM_{NP} Estimation

As a first approximation to CP_S and CM_{NP}, the wheelchair and subject were treated as two separate rigid bodies. Equations 1 and 2 describe moment balances for the two-body system. The balances were formulated at the level of the plates of the load cells used to measure force in the experiment. The x-axis and y-axis of the coordinate system always lie in the plane containing the plates of the load cells. The z-axis is taken to always be perpendicular

to this plane. Equation 1 can be solved for the location of CM_{NP} since ${}^{x}CM_{NP} = {}^{x}CM_{sbj}$ and ${}^{y}CM_{NP} = {}^{y}CM_{sbj}$.

$$\sum M = 0 = I_{sbj}\ddot{\theta}_{sbj} + \dot{\theta}_{sbj} \times I_{sbj}\dot{\theta}_{sbj} + CM_{sbj} \times m_{sbj}a_{sbj} + CM_{sbj} \times m_{sbj}g + I_{chr}\ddot{\theta}_{chr} + \dot{\theta}_{chr} \times I_{chr}\dot{\theta}_{chr} + CM_{chr} \times m_{chr}a_{chr} + CM_{chr} \times m_{chr}g + d_A \times F_A \times d_B \times F_B + d_C \times F_C + d_D \times F_D \quad [1]$$

Equation 2 can be solved to obtain the location of CP_S. The terms in these equations are illustrated in **Figure 1**.

$$\sum M = 0 = CP_s \times m_{sbj}a_{sbj} + CP_s \times m_{sbj}g + I_{chr}\ddot{\theta}_{chr} + \dot{\theta}_{chr} \times I_{chr}\dot{\theta}_{chr} + CM_{chr} \times m_{chr}a_{chr} + CM_{chr} \times m_{chr}g + d_A \times F_A \times d_B \times F_B + d_C \times F_C + d_D \times F_D \quad [2]$$

where:
CM: center of mass location (m)
CPS: center of pressure location in the plane of the wheelchair seat (m)
g: gravitational vector (m/sec^2)
a: linear acceleration vector (m/sec^2
m: mass (kg)
I: inertial matrix (kg-m^2)
$\ddot{\theta}$: rotational acceleration vector (rad/sec^2)
$\dot{\theta}$: rotational velocity vector (rad/sec)
d: distance vector (m)
F: ground reaction forces (N)
×: cross product
Superscripts subj and chr symbolize the subject and wheelchair
Subscripts A, B, C, D refer to each of the four load cells
Subscripts x, y, z refer to the vector directions
Bold terms represent vectors or matrices

The vertical reaction forces ${}^{z}F$ in Equations 1 and 2 were measured with four load cells. The load cells were attached to a sheet of plywood that could be bolted either to a tilt platform or to a vehicle floor. A second plywood sheet rested above the load cells on modified ball-and-socket joints. A reinforced manual wheelchair was rigidly secured to this second plywood sheet. Thus, all reaction forces from the wheelchair-subject system were transferred to the load cells. **Figure 2** shows the progression of this structure. The subscript *chr* in Equations 1 and 2 refers to the combined characteristics of the plywood and the wheelchair.

The ${}^{x}F$ and ${}^{y}F$ reaction forces did not have to be measured because the moment arm ${}^{z}d$ was essentially zero for the moment balances taken at the level of the plates of the load cells. As the modified ball-and-socket joints preclude bearing of moments by the load cells, **F** is a force rather than screw vector in Equations 1 and 2.

The base design of the load cells (22) was selected because it had proven successful in monitoring CM movement for subjects seated in a stationary wheelchair (18). Each load cell was instrumented with a full bridge of strain gages (CEA-13-250UW-350, Micro Measurements, Inc.) and dynamically calibrated through a range of -890 N to 333.8 N (-200 to +75 lbs) at a rate of 22.2 N/sec (5 lb/sec). Negative force denotes compression while positive force signifies tension. The load cells are sensitive only to axial load.

The mass, m, of the wheelchair and that of the subject are obtained from the vertical load cell readings. The location of the CM of the wheelchair in the x-y plane is calculated using Equation 1 with the wheelchair unoccupied. The heights of the CM of the chair and the CM of the subject are determined using a tilt platform (23). First, with only the wheelchair rigidly secured in place, the tilt platform is raised to different specified angles. Force and accelerometer measurements are taken, allowing

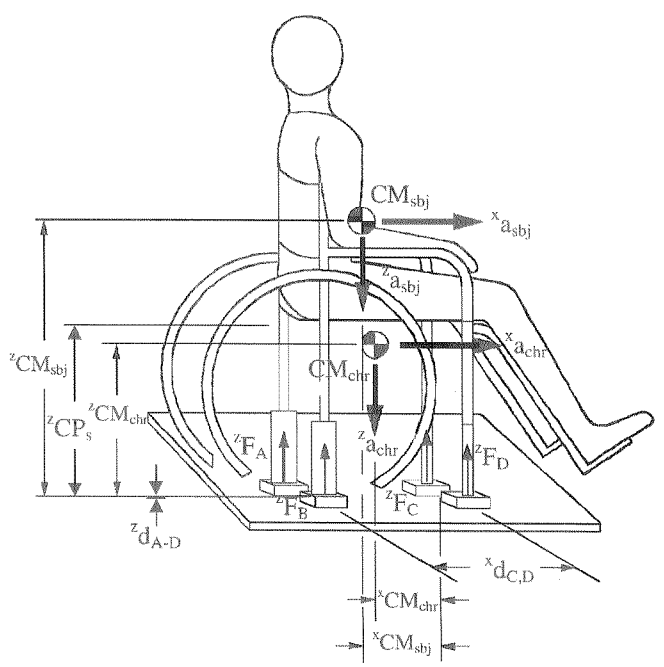

Figure 1.
Illustration of the parameters used to compute the CM_{NP} and CP_S locations in the sagittal plane. **d** = distance; **CM** = center of mass location; $\mathbf{CP_S}$ = center of pressure location in plane of seat; **F** = ground reaction forces; **a** = linear acceleration vector; **I**] = inertial matrix; sbj = subject; chr = wheelchair; A,B,C,D = load cells.

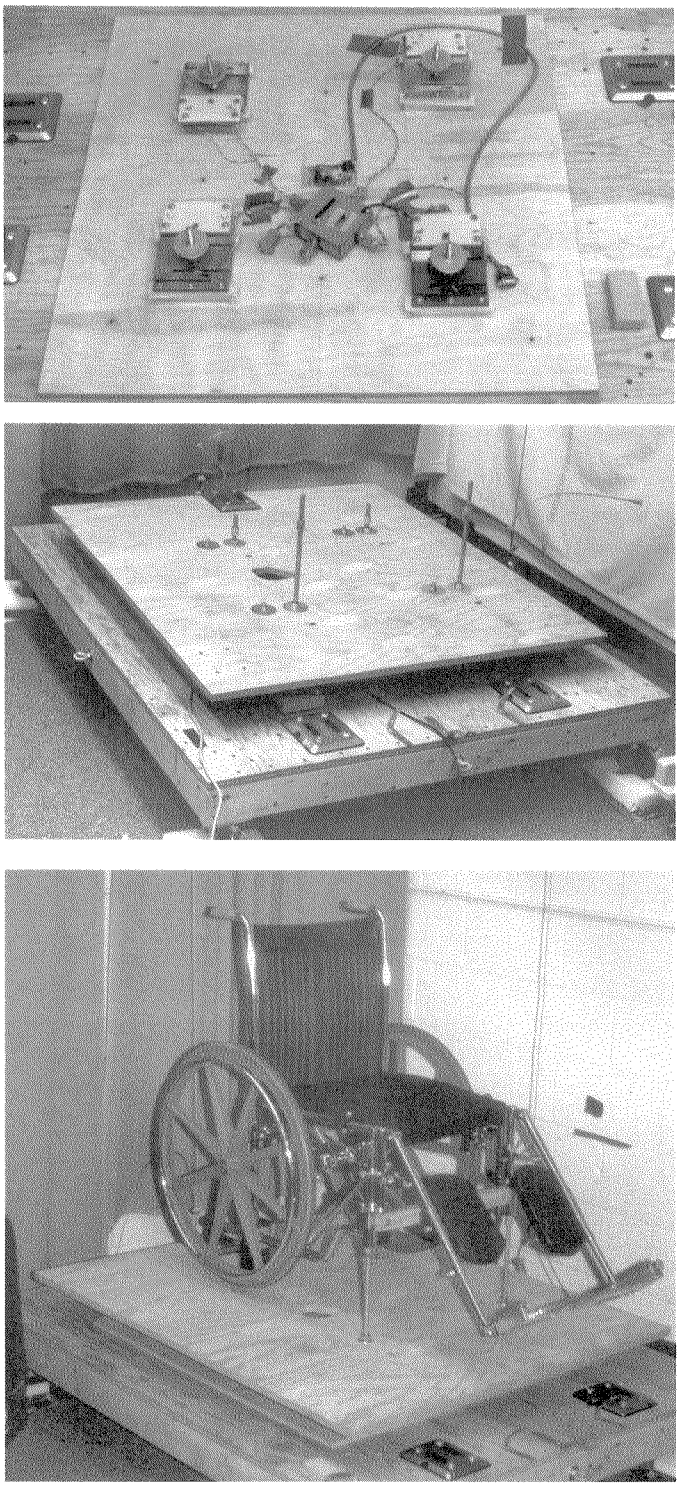

Figure 2.
Configuration used in detecting CP_S and CM_{NP}. (Top) The four load cells used to measure the vertical ground reaction forces. (Middle) Plywood sheet placed atop the load cells. (Bottom) Manual wheelchair mounted to the plywood.

simultaneous solution of sets of equations of the form of Equation 1 for the wheelchair CM height, ${}^{z}CM_{chr}$. Subject CM height is determined in an analogous manner with the subject secured in place to keep $\mathbf{CM}_{sbj}$ position constant. The subject's CM height is assumed to be constant throughout a test.

Equations 1 and 2 contain terms related to rotational inertia. Typical inertial values for a seated subject rotating about a line in the plane of the load cells are ${}^{xx}I_{sbj} \approx {}^{yy}I_{sbj} \approx$ 6.0 kg-m^2. Standard manual wheelchair values are ${}^{xx}I_{chr} \approx {}^{yy}I_{chr} \approx$ 2.2 kg-m^2*. Thus, the primary effect of rotational velocity and acceleration on CM_{NP} and CM_S will be seen in the resulting linear terms, such as $m\ddot{\theta}r$ and $m\dot{\theta}^2r$, rather than in the terms related to rotational inertia, such as $I\ddot{\theta}r$ and $I\dot{\theta}^2$. The linear accelerations resulting from rotation are inherently included in the **a** terms in Equations 1 and 2; the rotational terms are assumed to be insignificant in comparison and are not computed.

The **a** and **g** terms are measured with a triaxial accelerometer. The accelerometer readings include the effects of both the inertial accelerations and gravitational forces. The triaxial accelerometer was constructed by inserting three uniaxial accelerometers (range: ±2 g, Lucas Novasensor) into an orthogonal cube. The voltage-acceleration relationship was highly linear (R^2 >0.999). Signals from the accelerometer and load cells were low-pass filtered at 10 Hz and then sampled at 30 Hz. A pilot study revealed that for the dynamic perturbations of interest, subject acceleration with respect to the wheelchair was transient with a short duration in comparison to the length of the perturbation (23). Thus, accelerometer readings for the wheelchair were similar to those for the subject for most of the trial. To make the system for estimating CP_S and CM_{NP} more practically feasible, subject accelerometer values were approximated from recordings taken from a triaxial accelerometer mounted to the wheelchair.

A strong attribute of the algorithm developed for estimating CP_S and CM_{NP} is its capacity for direct application in a vehicle. The entire system of load cells, wheelchair, plywood, and accelerometer can be placed in a vehicle to measure subject response to actual controlled driving maneuvers. **Figure 3** shows the load cells installed in the wheelchair bay of a 6.7-m van used to transport patients.

***Bertocci G. Rehabilitation Sciences and Technology Dept., University of Pittsburgh, Pittsburgh, PA, personal correspondence, 1996.**

Evaluation of Performance

Analysis of the performance of the system in detecting CM and CP motion was conducted by examining CM_{NP}. With the assumptions used in the algorithm, error in CM_{NP} estimation is always greater than that for CP_S. Evaluation of CM_{NP} accuracy is straightforward, because it is a direct measure of physical displacement of the object with respect to the wheelchair. The tilt platform, which could rotate up to 30° in either the anterior-posterior (A-P) or medial-lateral (M-L) plane under servo control, was used to provide a dynamic disturbance (23).

The system was tested first under static conditions by placing weights on the stationary wheelchair. Then, performance was evaluated for a static load under dynamic conditions. A rigid box (mass 59 kg) was secured to the wheelchair seat. The tilt platform was pitched forward to a specified angle. While this angle was maintained, the box was manually shifted forward (in the x-direction) 10.2 cm (4.0 in). The platform was brought level again and the box moved 10.2 cm back to its starting position. The process was repeated for two other pitch angles and for two rolls in the M-L plane.

Next, algorithm efficacy was assessed for a dynamic load under dynamic conditions. Two human subjects participated in trials for which they attempted to maintain stability while the tilt platform was rotated in either the M-L or A-P directions. Eight different disturbance profiles were employed, with four involving rotation in the A-P plane and four in the M-L plane (24). Reflective markers placed on the subject, along with the measurement of body parameters, enabled independent computation of the CM_{NP} from video recordings (24). CM_{NP} was calculated using the segment masses, CM locations, and kinematics. These CM_{NP} signals were compared with those obtained from the algorithm through correlation analysis in MATLAB®.

Finally, utility and portability of the system were evaluated by examining the effects of the addition of restraints on CM_{NP} motion both on the tilt platform and in the van, shown in **Figure 3**. Trials were run with a Hybrid II anthropomorphic test dummy, ATD, situated in the wheelchair either with or without restraints. With the tilt platform, disturbance profiles used with the human subjects were applied to the ATD in the A-P plane. With the van, controlled, constant-radius left-turn maneuvers were performed by the authors (23).

Figure 3.
Installation of load cells for the CP_S/CM_{NP} measurement system in the wheelchair bay of a van.

RESULTS

System performance was validated for the situation with the static weights. Accuracy of CM_{NP} location was always within ±2 mm, less than the uncertainty involved in properly placing the weights.

CM_{NP} determination was also accurate for a static load under dynamic conditions. **Figure 4** displays the tilt platform angle and calculated CM_{NP} position of the rigid box for one of the trials. The time periods during which the box was being shifted are demarcated with joined arrows. Averages of CM_{NP} position were computed over one-second intervals before rotation, after the steady-state tilt platform angle was attained, and after the tilt platform was returned to its initial position. The displacements were calculated both before and after the box was physically moved relative to the chair. All of the calculated CM_{NP} averages were within ±5.1 mm of the expected values for all of the trials.

Tests were run with human subjects, providing a dynamic load under dynamic conditions. Subjects remained stable for some trials and became unstable for others. In the case of instability, CM_{NP} location was computed up to instability onset. Correlation was strong between the CM_{NP} signal computed from kinematics using video data and that calculated using force and acceleration data according to the algorithm. Across 16 different conditions, the average correlation coefficient was 0.90 (±0.11). Exclusion of one

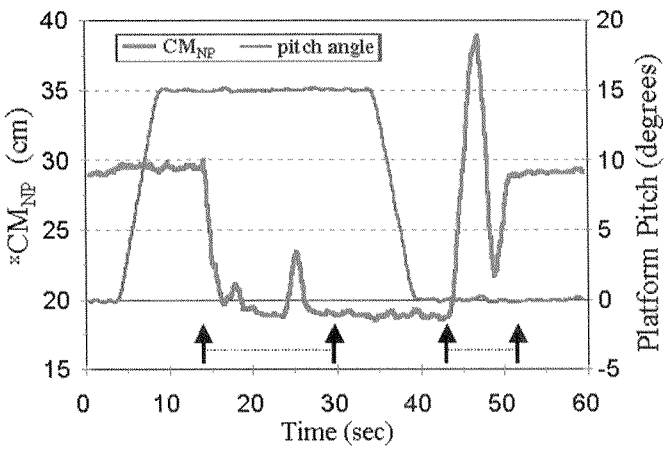

Figure 4.
Calculated $^{x}CM_{NP}$ of box during the platform rotation. The box was manually shifted 10.2 cm during the time periods denoted by two arrows joined by a line.

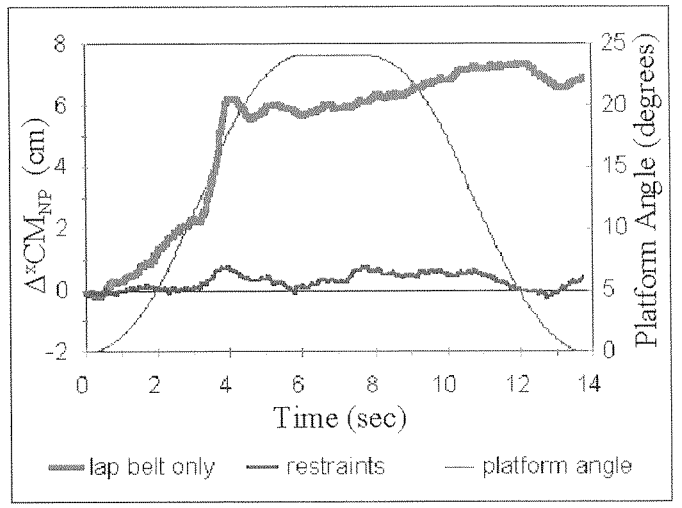

Figure 6.
$^{x}CM_{NP}$ movement for the free and restrained test dummy as the platform was pitched.
Lap belt only: ATD restrained only with a lap belt restraints: ATD secured with additional chest straps.

trial possessing a small mean-squared signal (1.16), and thus a low correlation value due to the small variation of the signal, increased the average correlation coefficient to 0.93 (±0.06). **Figure 5** displays an example of the CM_{NP} estimated from the video data and from the algorithm for a 12°-rotation of the tilt platform in the M-L plane. This graph illustrates the transient overshoot seen in the algorithm

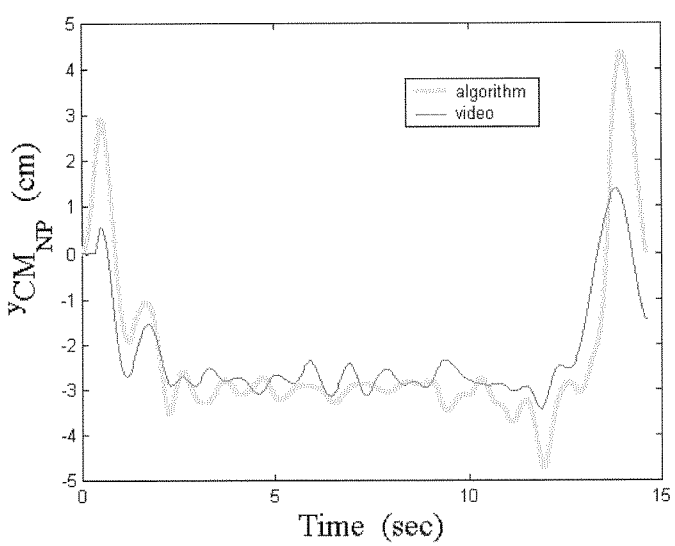

Figure 5.
Displacement of CM_{NP} for a human subject being rotated in the M-L plane, as calculated both from video data and according to the developed algorithm.

CM_{NP} when the subject accelerates with respect to the wheelchair.

System utility was evaluated with a Hybrid II ATD in the wheelchair. **Figure 6** contrasts ATD motion when it was restrained with only a lap belt with CM_{NP} displacement measured when the ATD was also secured with a chest belt. Without the chest belt, the ATD fell forward onto its legs as the tilt platform was pitched. The increased stability provided by the chest belt can easily be discerned by looking at the movement of the CM_{NP}.

The effects of providing support could also be seen in the CM_{NP} traces collected in the moving vehicle. **Figure 7** displays samples of the CM_{NP} displacement curves from two left-turn maneuvers, one for which the ATD fell onto the armrest and the other for which the addition of a lateral support attached to the wheelchair kept the torso of the dummy upright. The rough road surface caused the dummy to sway in the frontal plane, thereby producing the oscillations seen in the CM_{NP} curves.

DISCUSSION

Algorithms and hardware were developed for quantifying the response of seated individuals to applied perturbations. Estimates of the position of the CP and projection of the CM in a plane parallel to the surface supporting the wheelchair are formulated from force and

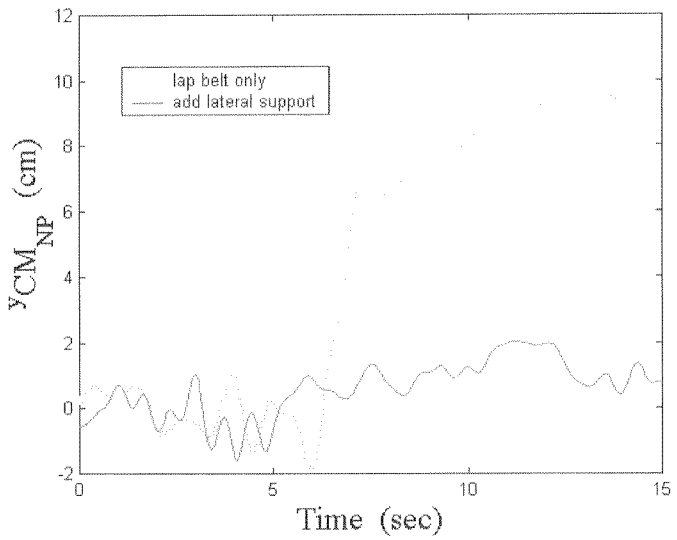

Figure 7.
CM_{NP} determination inside a moving vehicle during a left turn. CM_{NP} displacement curves are shown both for the ATD restrained only by a lap belt and the ATD restrained by both a lap belt and a lateral support connected to the wheelchair.

acceleration data. CP_S and CM_{NP} indices afford an analog, rather than binary, means of examining postural control with only limited kinematic information. The signals provide information even when stability is maintained. The described system was developed as a practical means for estimating CM_{NP} and CP_S in dynamic environments, such as a tilt platform or moving vehicle.

The system performed well with rigid bodies in the seat of the wheelchair. CP and CM movement of the rigid box could be differentiated from that of the wheelchair. This was achieved even in the presence of dynamic perturbations. When the tilt platform is rotated, CP measured at the support surface moves considerably without any motion of the object with respect to the wheelchair. This CP motion is partially dependent on the height of the seat above the support surface, along with other characteristics of the wheelchair. In contrast, CP_S and CM_{NP} are independent of the chair. **Figure 4** illustrates how CM_{NP} moved little despite a large perturbation. Accuracy of the estimations was within 5 mm for static loads in the wheelchair.

Due to their independence from wheelchair characteristics, the CP_S and CM_{NP} indices can be used to compare results from different wheelchairs. Power wheelchairs, for instance, could also be tested using the developed algorithm. Wheelchair mass and CM location could be found in the same manner as described for the manual wheelchair used in this study. OEM vehicle seats could also be employed.

With multi-segmented objects and human subjects, assumptions were made in order to feasibly implement the algorithm. For example, the subject's CM height was assumed to be constant throughout a test. Error arising from this assumption is dependent upon both the angle of the upper torso and the size of the non-normal force applied to the CM. For a typical subject at 30° of platform rotation and 30° of rotation of the entire upper body relative to the lower body, the CM_{NP} displacement would be underestimated by 0.9 cm, although the CP_S would be unaffected.

Damping and spring effects of the wheelchair seat were assumed to be negligible. The testing in the vehicle validated this assumption. Comparison of the vertical accelerations measured at the pelvis of the ATD and on the floor of the vehicle showed minimal alteration in the magnitude or phase of the signal.

The most important assumption involved the approximation of the linear acceleration of the subject's CM with recordings taken from the wheelchair. Subject acceleration with respect to the wheelchair generates error in the estimation of CM_{NP} and CP_S, with the error being greater in CM_{NP}. **Figure 5** exemplifies the transient overestimation of CM_{NP} displacement that occurs when the subject accelerates. However, comparison of CM_{NP} location estimated from the algorithm with the location estimated from the video data revealed high correlation between the signals. Typically, periods of subject acceleration with respect to the wheelchair were brief and little oscillation was seen in subject motion. In accordance with Gurfinkel's work with standing subjects (25), a good approximation of CM_{NP} position should be obtained even with some subject oscillation as long as the frequency remains low. The trials with the multi-segmented ATD substantiated the usefulness of the system. The effects of the addition of restraint belts are readily apparent from the CM_{NP} curves. One can also easily discern at what time the ATD began to fall in the trials without the restraint belts.

In future work, the error could be reduced by better estimation of subject acceleration, provided the accelerations could be resolved into the coordinate system attached to the support surface. For the stability testing of interest, measurement of linear acceleration experienced at the lower torso would seem to provide a reasonable approximation of subject CM acceleration. A triaxial accelerometer could be affixed to the lower torso. Tilt sensors would have to be added to the accelerometer cube in order to allow for the resolution of the acceleration components into the axes of the global coordinate system employed in Equations 1 and 2.

CONCLUSIONS

The developed CM_{NP} and CP_S indices provide a means for comparing subject stability across different types of wheelchairs and different dynamic conditions. While the measurements of CM_{NP} and CP_S do have the noted limitations, they can still serve as powerful tools in the testing of seated postural stability. The greater information contained in CM_{NP} and CP_S as opposed to other measures of stability should help to improve quantification of the subject response. Studies using these tools in the examination of postural control in individuals with spinal cord injury and the testing of new wheelchair securement and personal restraint devices have been ongoing.

ACKNOWLEDGMENTS

The authors thank Herman Weed for his input to this research.

REFERENCES

1. Chari VR, Kirby RL. Lower-limb influence on sitting balance while reaching forward. Arch Phys Med Rehabil 1986;67:730–3.
2. Curtis KA, Kindlin CM, Reich KM, White DE. Functional reach in wheelchair users: the effects of trunk and lower extremity stabilization. Arch Phys Med Rehabil 1995;76:360–7.
3. Do MC, Bouisset S, Moynot C. Are paraplegics handicapped in the execution of a manual task? Ergonomics 1985;28:1363–75.
4. Seelen HAM, Vuurman EFPM. Compensatory muscle activity for sitting posture during upper extremity task performance in paraplegic persons. Scand J Rehabil Med 1991;23:89–96.
5. Dallmeijer AJ, Kappe YJ, Veeger DHEJ, Janssen TWJ, van der Woude, LHV. Anaerobic power output and propulsion technique in spinal cord injured subjects during wheelchair ergometry. J Rehabil Res Dev 1994;31:120–8.
6. Kang W, Shaw G, Pilkey W, Thacker JG. Crash response of wheelchair occupants with different sitting postures in transport. Proceedings of the RESNA'95 Annual Conference, Vancouver, BC, Canada, Washington, DC: RESNA Press, 1995. p. 308–10.
7. Richardson H. Wheelchair occupants injured in motor vehicle-related accidents. Technical Report, National Center for Statistics and Analysis, Mathematical Analysis Division, Oct; 1991.
8. Babirad J. Considerations in seating and positioning severely disabled drivers. Assist Technol 1980;1:31–7.
9. Jones CK. Some do's and don'ts of positioning the spinal cord injured client that drives. Proceedings of the 5th International Seating Symposium, Memphis, TN; 1989. p. 220–3.
10. Abernethy C, Plank G, Sussman E. Effects of deceleration and rate of deceleration on live seated human subjects. Transportation Research Record N646: 1977;12–7.
11. Linden M. Van dynamics and disabled transport (Master's thesis). University of Virginia, 1993.
12. Bernard P-L, Peruchon E, Micallef J-P, Hertog C, Rabischong P. Balance and stabilization capability of paraplegic wheelchair athletes. J Rehabil Res Dev 1994;31:287–96.
13. Paddan GS, Griffin MJ. Transmission of roll and pitch seat vibration to the head. Ergonomics 1994;37:1513–31.
14. Cotton F. Studies in center of gravity changes. Austral J Exper Biol Med Sci 1931;8:53–67.
15. Murray M, Seireg A, Scholz R. Center of gravity, center of pressure, and supportive forces during human activities. J Appl Physiol 1967;23:831–8.
16. Prieto T, Myklebust JB, Hoffmann RG, Lovett EG, Myklebust BM. Measures of postural steadiness: differences between healthy young and elderly adults. IEEE Trans Biomed Eng 1996;43:956–66.
17. Riley PO, Benda BJ, Gill-Body KM, Krebs, DE. Phase plane analysis of stability in quiet standing. J Rehabil Res Dev 1995;32:227–35.
18. Chung K, Tissue contour and interface pressure on wheelchair cushions (Dissertation). University of Virginia, 1987.
19. Nichols D, Miller L, Colby L, Pease W. Sitting balance: its relation to function in individuals with hemiparesis. Arch Phys Med Rehabil 1996;77:865–9.
20. Bouisset S, Duchene JL. Is body balance more perturbed by respiration in seating than in standing posture? NeuroReport 1994;5:957–60.
21. Koozekanani SH, Stockwell CW, McGhee RB, Firoozmand F. On the role of dynamic models in quantitative posturography. IEEE Trans Biomed Eng 1980;BME-27:605–9.
22. Wheatley D, Berme N, Ferguson-Pell M. A low-profile load transducer for monitoring movement during sleep. Exper Mech 1980;19N–20N.
23. Kamper D, Adams T, Reger S, Parnianpour M, Barin K, Linden M. A low-cost, portable system for the assessment of the postural response of wheelchair users to perturbations. IEEE Trans Rehab Eng 1999;7:435–42.
24. Kamper D, Barin K, Parnianpour M, Reger S, Weed H. Preliminary investigation of the lateral postural stability of spinal cord-injured individuals subjected to dynamic perturbations. Spinal Cord 1999;37:40–6.
25. Gurfinkel E. Physical foundations of stabilography. Proceedings of the 2nd Symposium International de Posturographie, Smolenice; 1973. p. 9–11.

Submitted for publication January 20, 1999. Accepted in revised form May 5, 1999.