Department of Veterans Affairs

Journal of Rehabilitation Research and Development Vol. 37 No. 5 September/October 2000
Pages 573–589

Injury risk assessment of wheelchair occupant restraint systems in a frontal crash: A case for integrated restraints

Gina E. Bertocci, PhD, PE and Jonathan Evans, BS
Department of Rehabilitation Science and Technology, University of Pittsburgh, Pittsburgh, PA 15260

Abstract—Obtaining proper occupant restraint fit when using a wheelchair as a motor vehicle seat is often difficult to attain with vehicle-mounted restraint systems. The comprehensive evaluation conducted in this study illustrates the occupant crash protection benefits of wheelchair-integrated restraint systems, as compared to vehicle-mounted restraint systems. Using computer crash simulation, occupant kinematic and biomechanical measures associated with a 20g/30mph frontal impact were evaluated and compared to injury criteria and SAE J2249 WTORS kinematic limits. These measures were also used to compile a Motion Criteria (MC) index and Combined Injury Criteria (CIC) index for each evaluated restraint scenario. These indices provide a composite method for comparing various crash scenarios. With the exception of an unsafe 36-inch height off-shoulder shoulder belt anchor scenario, the MC index was minimized for the integrated restraint scenario. Similarly, the CIC index was also minimized for the wheelchair-integrated restraint scenario. This preliminary study emphasizes the need for transfer of integrated restraint technology to the wheelchair transportation industry.

This material is based on work supported in part by the STTR-NIH grant "Evaluation of a Wheelchair-Integrated Restraint System" awarded to the University of Pittsburgh and the University of Pittsburgh NIDRR RERC on Wheeled Mobility.

Address all correspondence and requests for reprints to: Gina E. Bertocci, PhD, PE, University of Pittsburgh, Department of Rehabilitation Science and Technology, 5044 Forbes Tower, Pittsburgh, PA 15260; email: ginaber@pitt.edu.

Key words: *injury prevention, injury risk assessment, integrated restraints, occupant restraints, wheelchair occupant protection, wheelchair safety, wheelchair transportation.*

INTRODUCTION

The enactment of the 1990 Americans with Disabilities Act has led to an increased need for transportation services for persons with disabilities to allow them to commute safely to work, participate in recreational activities, and carry out activities of daily living. Many of these persons are wheelchair users who are unable to transfer to a vehicle seat, thus necessitating that they travel seated in their wheelchairs. Vehicle seating systems provide inherent crash protection to their occupants through properly positioned occupant restraint systems and crashworthy seat design.

In contrast, wheelchair-seated travelers are unable to benefit from vehicle seat safety features because wheelchairs are not typically designed with crash safety as a primary function. Furthermore, occupant restraint systems used by vehicle-seated occupants have been designed to accommodate and provide effective protection to a diverse population of able-bodied occupants. Conversely, wheelchair occupants of differing size typi-

cally use wheelchairs of varying size and configuration, rendering them less likely to accommodate vehicle-mounted restraint systems. In fact, field investigation has shown that occupant size differential often renders vehicle-mounted occupant restraint systems unusable, requiring that wheelchair users travel without protection afforded by occupant restraints. On those occasions where the wheelchair user is able to use vehicle-mounted occupant restraints, proper belt angles and positioning required for effective restraint are often inhibited by wheelchair structures such as armrests. The additional constraints often posed by these wheelchair structures invariably lead to poorly positioned lap and shoulder belts, which has been documented as a source of belt-related injury (1,2).

In an attempt to provide the wheelchair traveler with crash protection similar to the able-bodied traveler, this study evaluated the crash protection advantages that may be realized by integrating occupant restraints on wheelchairs. By physically anchoring the occupant restraint to the wheelchair, a custom fit is achieved for each wheelchair user. Also, this approach removes the complexity associated with attempting to fit a vehicle-mounted occupant restraint to the wide range of occupant-wheelchair size combinations. It is proposed that this integrated restraint concept, which has been proven in the automobile industry, will inherently increase the frequency of use, as well as the comfort and effectiveness of the wheelchair occupant restraints.

The Need for Wheelchair Integrated Restraint Systems

For wheelchair users unable to transfer from their wheelchair to a vehicle seat, the wheelchair must serve as their seat during transportation. Because most wheelchairs were not designed for this purpose, the wheelchair-seated occupant is not offered the same level of safety as those occupants using automotive original equipment manufacturers (OEM) vehicle seats. Unlike wheelchairs, OEM vehicle seats have been designed to anticipate and accommodate the loads and occupant response associated with crash conditions. Furthermore, vehicles have been designed so that the combined seat and occupant restraint protection system is optimized to provide effective crash protection for a cross-sectional population. Conversely, occupant protection for the wheelchair-seated occupant requires that after-market equipment, designed independent of the wheelchair and occupant, be installed to secure both the wheelchair and the occupant. In many cases, the result of these circumstances is poor fit or unusable occupant restraints, leading to ineffective crash protection or belt-induced injuries (1,2).

Voluntary standards have been developed to establish general design and performance requirements for wheelchairs intended to be used as a vehicle seat (i.e., transport-safe wheelchairs), and for wheelchair tiedowns and occupant restraint systems (WTORS). An ANSI/RESNA standard addressing wheelchairs used as seats in motor vehicles (WC-19) was adopted this year (3). Similarly, a Society of Automotive Engineers (SAE) standards group has completed a WTORS standard (SAE J2249), which was adopted as recommended practice in 1996 (4). Based on current practices for the use of occupant restraints, these voluntary standards incorporate guidance for installation and usage of occupant restraints. The current practice for wheelchair occupant pelvic restraints is to anchor the belts to the vehicle floor or to the rear wheelchair tiedowns. Current practice for the shoulder restraint consists of a fixed upper anchor point on the vehicle wall or ceiling, and a lower anchor located on the pelvic belt. ANSI/RESNA WC-19 proposes the addition of a pelvic restraint on those wheelchairs that will be used in motor vehicles. A two-year integrated pelvic restraint phase-in period will be granted to wheelchair manufacturers.

Several problems are encountered with current practices employing vehicle-mounted occupant restraints in wheelchair transportation. The location of fixed vehicle anchorages (particularly the upper shoulder restraint anchorage) is often limited to sites that are structurally suitable. Location of windows, positions of seating, and the vehicle's structural integrity often result in less than optimal placement of these anchor points in public transit vehicles. Additional problems with current restraint practices occur due to different wheelchair seat heights and various occupant populations requiring use of the same fixed shoulder belt anchorage, leading to compromised belt fit, comfort, and occupant protection (5).

Figure 1 illustrates the range of shoulder belt anchorage locations required to accommodate adult and child wheelchair users when following Federal Motor Vehicle Safety Standards (FMVSS) shoulder belt comfort zone recommendations (6). This figure highlights the significant effect of varying wheelchair seat heights. A fixed shoulder belt anchorage configured for the 50th-percentile male population would clearly lead to the shoul-

der belt passing over the face or upper neck of smaller wheelchair occupants, rendering the restraints useless, or even dangerous. Such belt configurations could lead to compromised protection of a child in a crash or during normal driving maneuvers. It is likely that in these cases the occupant restraint is simply not worn (7).

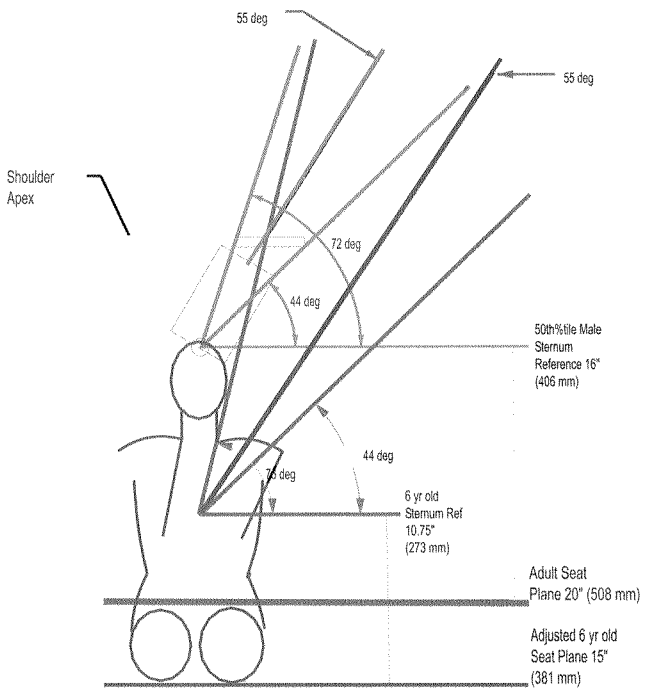

Figure 1.
Variation in vehicle-mounted upper restraint anchor point needed to accommodate 50th-percentile male and 6-year-old wheelchair users with varying seat height.

Vehicle-mounted restraints used to accommodate wheelchair occupants also lead to poor belt fit due to obstructions or constraints presented by the wheelchair structure. Armrests, clothing shields, and other wheelchair components often obstruct clear paths required to obtain the belt position and angles that provide the most effective occupant protection. Poorly positioned lap belts can lead to "submarining," which can induce abdominal and lumbar vertebra injury in frontal crashes (1,2). Similarly, improperly positioned shoulder belts have been found to lead to excessive head excursions (8), increasing the risk of secondary impact with vehicle surfaces, and to cause internal injuries to vital thoracic cavity organs (9). In addition to safety and comfort concerns, the current methods of restraint engagement typically require the assistance of an attendant or operator, thereby leading to undesirable contact between the disabled passenger and the vehicle operator.

A recent study conducted by the authors on shoulder belt anchor influence on wheelchair-seated occupants in a frontal crash shows that varying shoulder belt anchorage location impacts occupant protection (8). In this study, computer crash simulation was used in the evaluation of various Hybrid III ATD (anthropomorphic test device) biomechanical measures and injury criteria while varying the position of the shoulder belt anchorage. Anchors resulting in belt geometries consistent with the NHTSA-proposed shoulder belt comfort zone were found to produce the most effective occupant protection. Unfortunately, achieving this belt fit in wheelchair transportation scenarios using a fixed anchor, vehicle-mounted restraint system is difficult to attain across a mixed occupant population having varying wheelchair seat heights. Recently, WTORS manufacturers have begun offering"track-type" restraint anchoring systems that have been mounted longitudinally along van or bus walls, providing horizontal shoulder belt anchorage adjustment. Such installations allow for moving the shoulder belt anchorage fore or aft within the wheelchair securement station, providing improved belt fit.

A potentially simple, yet effective, solution to the problem of inadequate wheelchair occupant protection is offered through equipping the wheelchair with anchor points and belts for a 3-point occupant restraint. This integrated restraint approach has been successfully implemented and has been shown to provide superior occupant protection in the automotive industry (10,11,12) and in school buses used to transport infants (13). Integrated restraints have also been employed in infant strollers used for the transport of disabled children. This approach has not, however, been investigated for application to wheelchairs used as seats during vehicle transportation.

Integrating restraints on wheelchairs used for transportation will potentially resolve several operational problems associated with present wheelchair restraint practices.

- First, vehicle-mounted restraint anchor locations currently used in public wheelchair transportation are typically selected based upon guidelines established to promote effective occupant protection for an average or 50th-percentile male. Application of this anchoring configuration by wheelchair users of a size other than the 50th-percentile male can be ineffective or even hazardous to the occupant if the belt transmits forces to body areas other than boney structure. In many cases the restraint is deemed unusable

due to poor or uncomfortable fit with the mismatch between occupant and restraint further compounded in wheelchair transportation by the variations in wheelchair size and the size of the user. Integrating the occupant restraint into the wheelchair serves to resolve these problems of restraint use across a mixed population because the restraint will inherently be customized to each wheelchair and its user, thereby providing optimal occupant protection. It can further be asserted that the frequency of restraint use will increase because comfort and fit of the restraint system will be enhanced.

- Second, when attempting to install an occupant restraint anchor on a public transportation vehicle, it is common to find that the vehicle's structure dictates the use of an anchorage location that is less than optimal. As mentioned above, despite an effort to optimize vehicle-mounted restraint anchor location for various occupant sizes, locations of windows, seats, or structurally unsuitable vehicle components commonly preclude favorable installation intentions. Once again, by integrating restraint anchorages onto the wheelchair, users are afforded a customization in belt fit that serves to optimize crash protection.

- Third, lap belt angle and positioning play a crucial role in occupant protection. Numerous factors such as belt slack, lap belt angle, seat design, and position of the body relative to the lap belt have been found to influence submarining and belt-related injuries in frontal crashes. When lap belt forces are >680 lb and the belt is positioned over soft tissue, internal injury to abdominal organs can result (14). Because wheelchairs introduce a number of components that inhibit belt path, by limiting wheelchair users to vehicle-mounted restraint systems it is difficult, if not impossible, to obtain a reasonable lap belt fit. A typical wheelchair equipped with armrests and clothing shields makes it difficult to identify a clear path through which the lap belt can pass to a vehicle floor anchorage. Often the resulting lap belt configuration consists of passing the belt over the armrest, introducing extensive belt slack and resulting in poor belt positioning on the occupant. Such a situation will greatly increase the risk of injury to the occupant because armrests will likely impinge upon the occupant in a crash, rendering the lap belt ineffective and possibly dangerous to the occupant. Through the use of wheelchair integrated restraints, the fit of the lap belt will inherently be customized to each individual wheelchair user, because wheelchair prescription is dependent upon occupant size.

- Fourth, currently most wheelchair users rely on an attendant or vehicle operator to engage vehicle-mounted occupant restraints. In addition to causing a delay in the vehicle route schedule, this restraint engagement process usurps the independence of the wheelchair user. Through restraint integration, wheelchair users with the needed upper extremity function would be able to engage their occupant restraints independently, eliminating the need for vehicle operator assistance. For those wheelchair users who are unable to independently engage their occupant restraints, parents or caregivers would have the opportunity to properly secure the wheelchair user's occupant restraints prior to their boarding a vehicle.

Injury Risk Assessment Method to Evaluate Wheelchair Transportation Scenarios

To compare various wheelchair crash scenarios, such as securement methods, occupant restraint configurations, seating positions, or variations in seating materials, an injury risk assessment (IRA) method appropriate to the evaluation of wheelchair crash safety was developed (15). This method evaluates both the kinematic occupant response and biomechanical loads placed on the wheelchair occupant in a frontal crash (**Table 1**). An index that compares occupant motion/kinematic response to SAE J2249 Standard limits, (Motion Criteria [MC] index) and an index that compares biomechanical loading to injury tolerances, (Combined Injury Criteria [CIC] index) result through application of the IRA method (4). In a previous study, this IRA method was applied through crash simulation to evaluate the influences of wheelchair securement point location on occupant injury risk in a 20g/30mph frontal impact (15).

The MC index is based upon evaluation of peak forward excursions of the head, wheelchair, and knee, and comparison to limits established by the SAE J2249 Standard to prevent against secondary impact with the vehicle interior. The expression for the MC index is shown in the equation below.

$$MC = 0.25\left[\frac{EXC_{Head}}{EXC_{Head\text{-}Limit}}\right] + 0.25\left[\frac{EXC_{Knee}}{EXC_{Knee\text{-}Limit}}\right] + 0.25\left[\frac{EXC_{WC}}{EXC_{WC\text{-}Limit}}\right] + 0. \quad [1]$$

Table 1.
Injury and Motion Criteria Used in the Injury Risk Assessment Method.

Injury or Motion Criteria	Equation Abbraviations	Tolerance Value/ Source
Head Injury Criteria	HIC	1000 FMVSS
Neck Flexion	Mflex	1681 in-lb GM-IARV
Neck Axial Tension	Ftens	247 lb for 45 msec GM-IARV
Neck Compression	Fcomp	247 lb for 30 msec GM-IARV
Neck Fore-Aft Shear	Fshear	247 lb for 45 msec 337 lb for 25 msec 697 lb (0 msec) GM-IARV
Chest Acceleration	a	60 g FMVSS
Forward Head Excursion	Exchead	25 6″ SAE J2249
Forward Wheelchair Excursion	Excwe	7.9″ SAE J2249
Forward Knee Excursion	Excknee	14.8″ SAE J2249
WC to Knee Excursion Ratio	Excwc/ Excknee	<=1.1 SAE J2249

In this equation *EXC* represents the forward excursion of the designated body segment or wheelchair and the subscript *limit* represents the SAE J2249 WTORS sled test performance limitation.

The CIC index is based upon biomechanical measures of the head, neck, and thorax regions, and comparison to injury tolerance levels. Injury tolerance levels used in calculating CIC include the FMVSS and GM Injury Assessment Reference Values (IARV; 16,17). Injury criteria tolerance levels are typically based upon a level at which 25 percent of the test population experience serious injury (18). Individual body regions considered in the CIC index are also weighted based upon their injury significance derived from accident statistical studies (19). The CIC index results from the weighing of biomechanical measures based upon their injury significance in a crash, with normalization to injury tolerances. Weighing of injury significance to distinct body regions was based upon accident studies from the US and Sweden compiled by Viano and Arepally for restrained occupants (19). Significance values when considering only the head, neck, and chest are 57 percent, 14 percent, and 29 percent, respectively. Where multiple tolerance criteria are available for a given body region, these values are weighed equally. The derived expression for the CIC index is shown in the equation below.

where F_{axial}, F_{comp}, F_{shear} represent axial, compressive, and shear forces acting on the neck, and M_{flex} represents the flexion moment of the neck. Here, $_a$ designates chest acceleration, and *HIC* is the abbreviation for Head Injury Criteria. The subscript *t* affixed to variables is used to designate injury tolerance levels.

$$CIC = 0.57\left[\frac{HIC}{HICt}\right]_{head} + \frac{0.14}{4}\left[\frac{F\ axial}{F\ axial\text{-}t} + \frac{F\ comp}{F\ comp\text{-}t} + \frac{F\ shear}{F\ shear\text{-}t} + \frac{M\ flex}{M\ flex\text{-}t}\right]_{neck} + .29\left[\frac{a}{a\ t}\right]_{chest} \quad [2]$$

Methods similar to the wheelchair occupant-based IRA method have been developed and applied by Viano and NHTSA in an effort to provide a comprehensive evaluation of various crash safety features or various motor vehicles (19). The NHTSA-developed assessment method is known as the New Car Assessment Program (NCAP; 20). The NCAP is a simplistic rating system assigning a 1 to 5 star rating (5 stars offering the best crash protection) to compare vehicle frontal crashworthiness. This assessment method evaluates only head acceleration, as described by the HIC, and chest acceleration. Using HIC and chest acceleration, probabilities of AIS level-4 chest and head injuries are then predicted based upon injury risk function curves. A rating of 5 stars is equivalent to combined injury probability of 10 percent or less. Although the NHTSA NCAP system provides a comparative tool for consumers, it is not complete in its ability to predict life-threatening injuries. That is, additional biomechanical measures associated with the head-neck complex, sternum compression and abdominal compression are not included as part of the evaluation. Bending moments and axial forces applied to the neck, and compression of the thoracic cavity or abdominal region, not included in the NCAP assessment method, can, however, result in disabling conditions or death.

A rating system that encompasses critical injury modes and is based upon a simplistic rating system can be a useful comparative tool that allows wheelchair users to evaluate the crashworthiness of various transit wheelchairs.

METHODS

To evaluate the effects of occupant restraint configuration and anchorage location on the crash response of a wheelchair user, a lumped-mass model of the SAE surrogate wheelchair (21) with a 50th-percentile male Hybrid III anthropomorphic test dummy was used. The SAE surrogate wheelchair (**Figure 2a**), a structurally enhanced wheelchair, was constructed for the purposes of repeated sled testing to evaluate the performance of wheelchair tiedowns and occupant restraints (WTORS; 4). Wheelchair securement in the model is accomplished using a four-point tiedown system. The occupant restraint system used in the model was either a vehicle-mounted lap and shoulder belt, or a fully integrated lap and shoulder belt. In both the integrated and vehicle-mounted scenarios, the lap belt angle was positioned 50 degrees from horizontal.

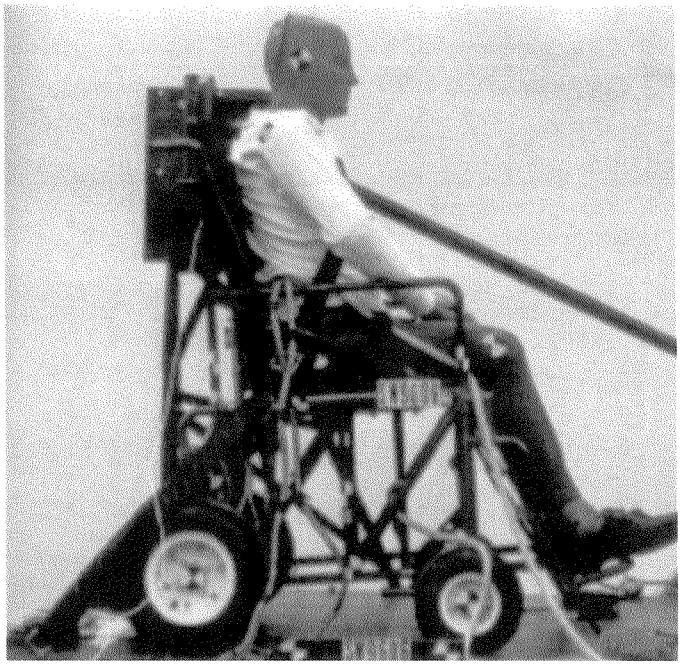

Figure 2a.
SAE J2249 surrogate wheelchair and Hybrid III ATD.

The described model, developed for research associated with the SAE J2249 WTORS, uses the Articulated Total Body/Crash Victim Simulator code (Wright-Patterson Air Force Base). Validation of the SAE surrogate wheelchair model has been conducted through interlaboratory sled impact testing (21). The model subjects the vehicle, transporting a forward oriented wheelchair and occupant, to a 20g, 30mph frontal impact, in compliance with SAE J2249 deceleration pulse corridor.

Using the wheelchair/occupant model described above, simulations were run with varying shoulder belt configurations while maintaining all other conditions constant, or an integrated restraint system. Upper anchor points investigated were based upon either the SAE J2249-recommended anchorage zone, or actual anchorage locations found in public transit vehicles. **Table 2** describes the evaluated anchorage locations and their origins.

For each case, wheelchair and occupant kinematics were measured, along with occupant biomechanics necessary to describe the MC and CIC indices. Individual measures include wheelchair, head and knee forward excursion, HIC value, head acceleration, neck force and moment, and chest acceleration. Values were determined for each simulation and were used to calculate the MC and CIC indices associated with each restraint scenario. Individual measures were also compared to their specific

Table 2.
Upper Shoulder Belt Anchorage Configurations Evaluated and Their Origins.

Upper Shoulder Belt Anchorage Height	Derived From
36″ vehicle mounted	Actual vehicle installation - below window
47″ vehicle mounted	SAE J2249 50th %tile Male Recommended Zone - lowest pain
63″ vehicle mounted	SAE J2249 50th %tile Male Recommended Zone - highest point
67″ vehicle mounted	Actual vehicle installation - above window
Wheelchair integrated	Proposed

injury criteria or kinematic limit as appropriate. Time histories through 100 msec were recorded for each measure and are presented graphically for each scenario. (Where necessary to ascertain compliance with injury criteria or kinematic limits, time histories were extended.) Overall crash response of the wheelchair and occupant was also evaluated and visually compared at 80 msec.

RESULTS

Comparison of gross occupant motion across the various scenarios at 80 msec shows that occupant excursion appears minimized and better controlled with an integrated occupant restraint (**Figure 2b**). The integrated restraint configuration also appeared to reduce overall forward excursion. The off-shoulder configuration appears to offer the least control in terms of occupant response, since the shoulder slips free of the shoulder belt, allowing for increased torso excursion and rotation.

MC Index

Wheelchair Excursion. Peak forward wheelchair excursions and time history profiles for each scenario did not vary significantly. Peak values for all scenarios were near 2.5 inches (**Figure 3**). No scenarios produced wheelchair excursion values in excess of the 7.9-inch limit established by SAE J2249.

Head Excursion. Peak forward head excursion occurring between 0–120 msec was minimized at 12.0 inches with the use of an integrated restraint (**Figure 4**). The 36-inch high anchor scenario with the belt positioned on the shoulder also reduced forward head excursion, with a peak of 12.4 inches. The 36-inch anchor height with the belt positioned off the shoulder resulted in the largest head excursion (27.3 inches), and was continuing to increase at 120 msec. This peak head excursion associated with the 36-inch off-shoulder scenario exceeded the SAE J2249 limit of 25.6 inches.

Knee Excursion. None of the evaluated restraint scenarios produced knee excursions in excess of the 15-inch SAE J2249 limit between 0–100 msec (**Figure 5**). The largest knee excursion (2.7 inches) resulted from the 67-inch high anchor scenario, and was continuing to increase at 100 msec. The integrated restraint scenario resulted in a peak knee excursion of 2.5 inches. The smallest knee excursion (2.2 inches) was associated with the 36-inch height off-shoulder scenario.

Wheelchair/Knee Excursion Ratio. The wheelchair-to-knee excursion ratios were calculated in accordance with SAE J2249, using the peak excursion values of each variable, regardless of the time at which they occurred. None of the scenarios exceeded the SAE J2249, which limits the ratio to 1.1.

MC Index. Using the above wheelchair and occupant motion measures, the MC index was calculated for each of the restraint scenarios. As shown in **Figure 6**, the MC index is highest (0.60) in the 36-inch height, off-shoulder scenario. The MC index is minimized (0.47) in the integrated restraint scenario.

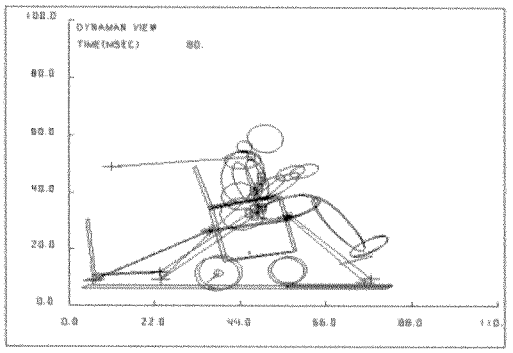

Shoulder Restraint Anchor 36" above floor, on shoulder

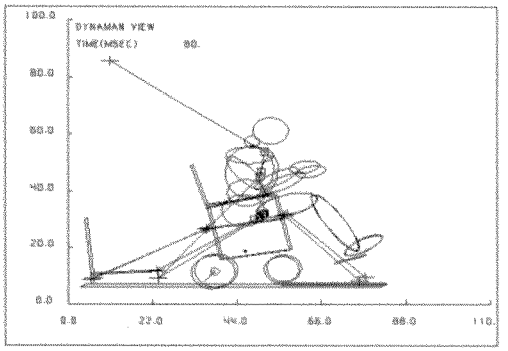

Shoulder Restraint Anchor 67" above floor

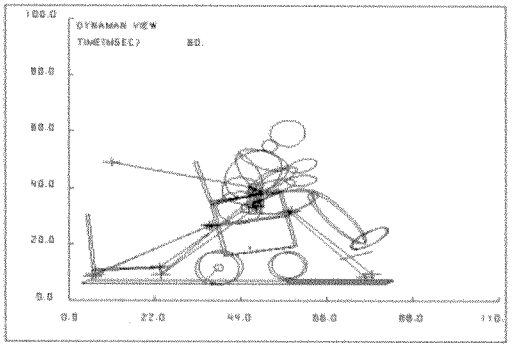

Shoulder Restraint Anchor 36" above floor, off shoulder

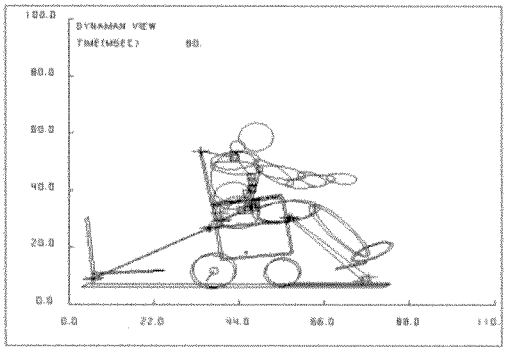

Wheelchair Integrated Restraint

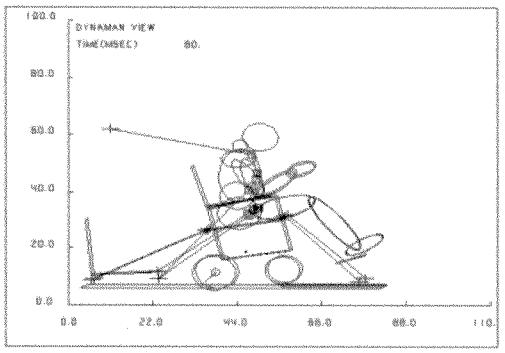

Shoulder Restraint Anchor 47" above floor

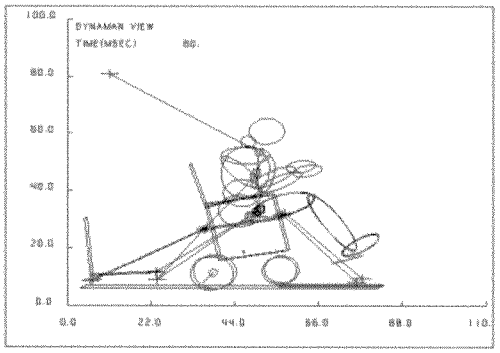

Shoulder Restraint Anchor 63" above floor

Figure 2b.
Wheelchair and occupant crash responses at 80 msec.

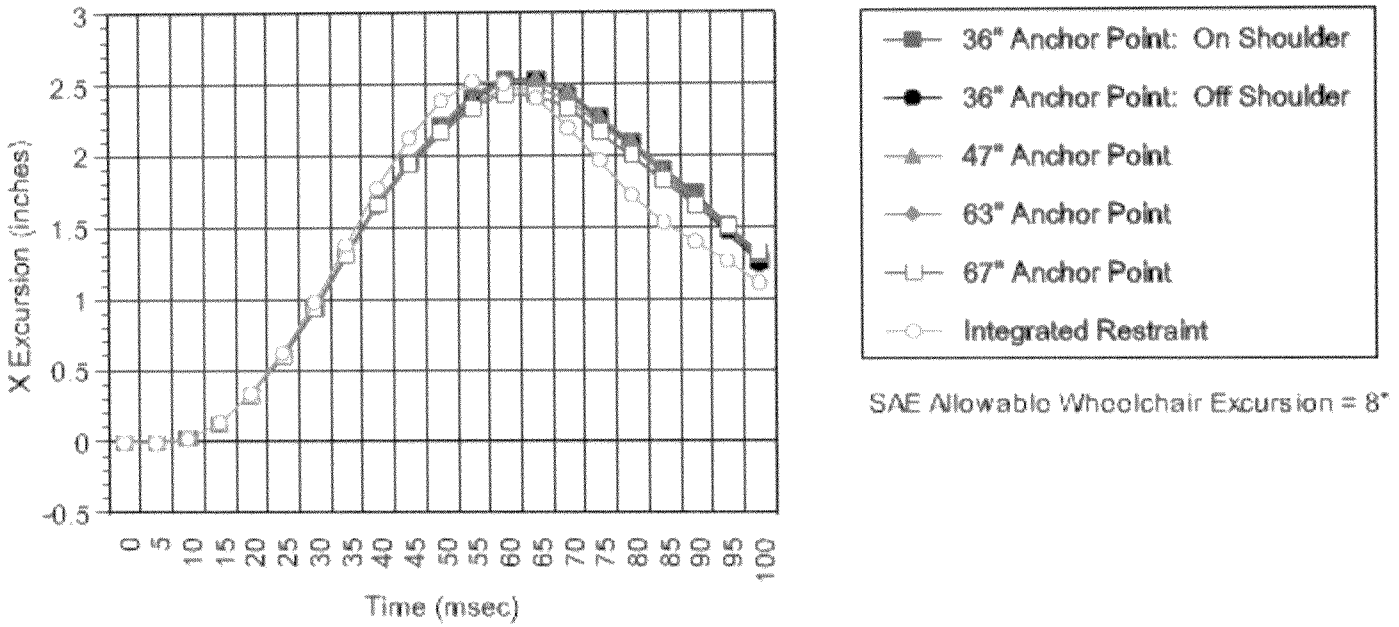

Figure 3.
Wheelchair forward excursion time histories for varying restraint scenarios.

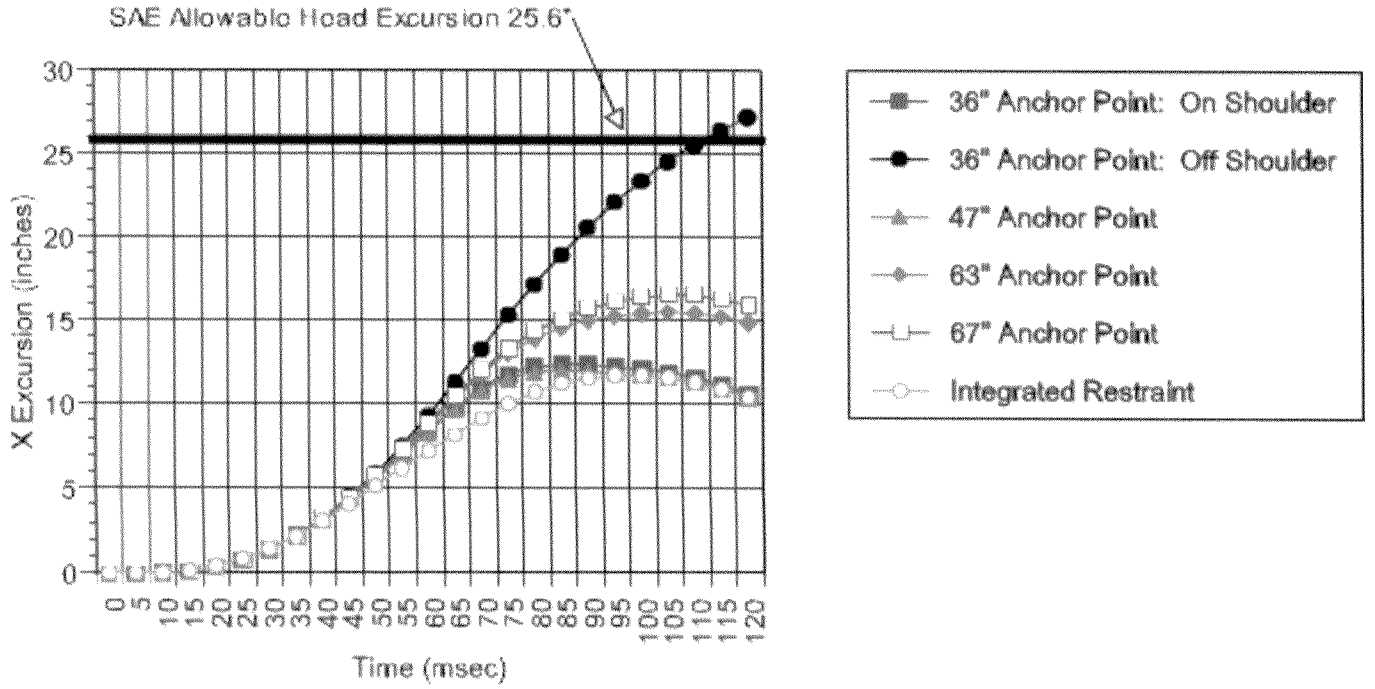

Figure 4.
Head forward excursion time histories for varying restraint scenarios.

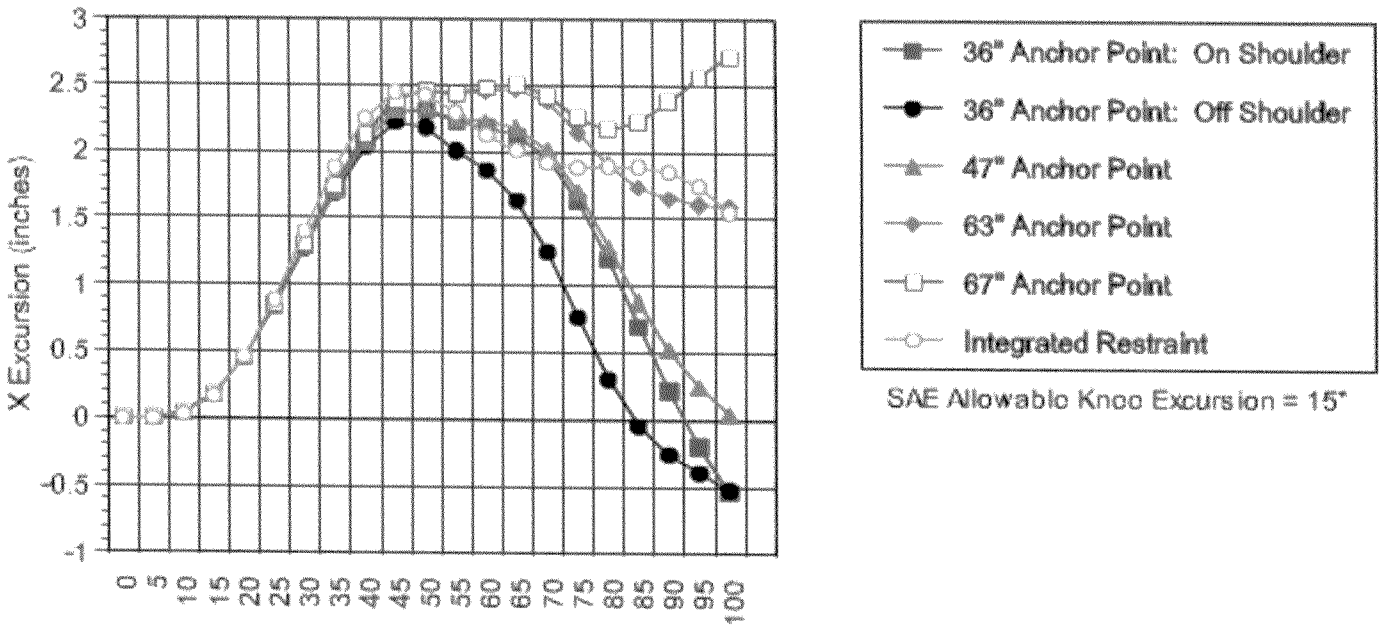

Figure 5.
Knee forward excursion time histories for varying restraint scenarios.

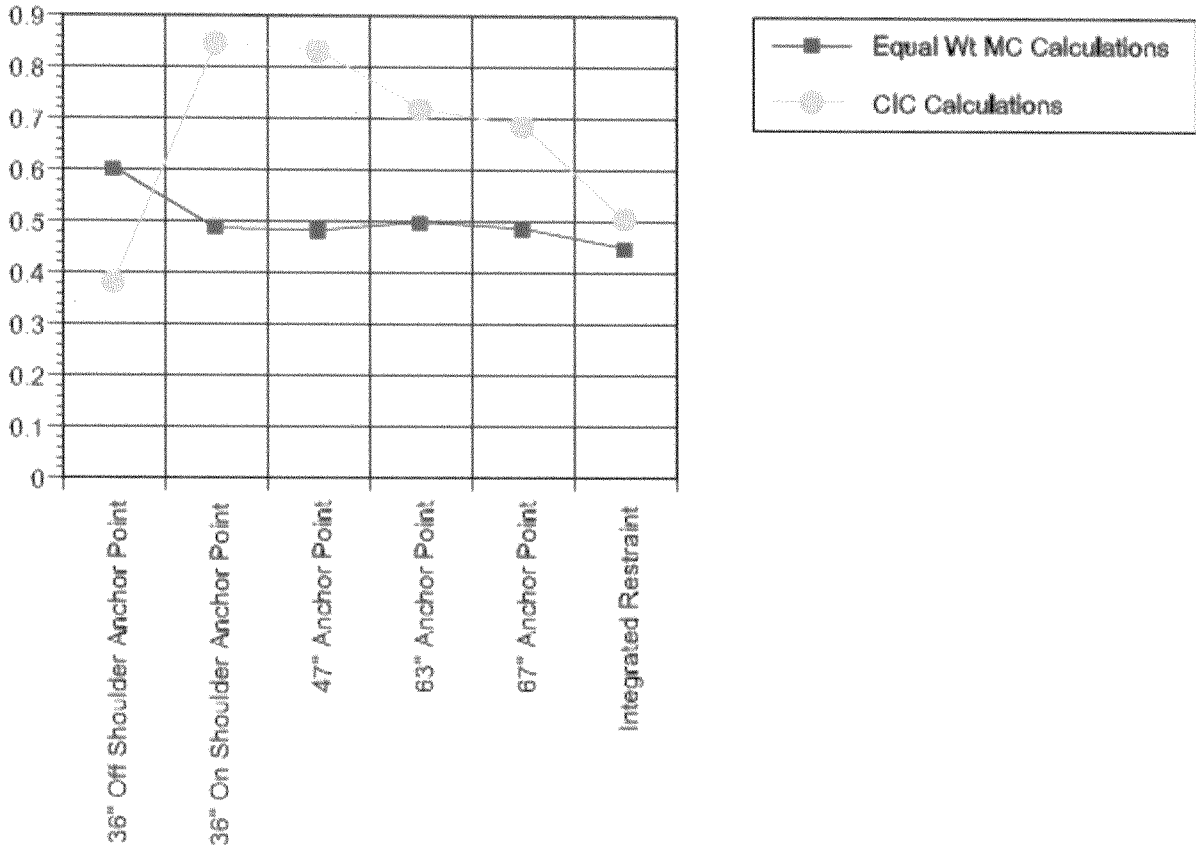

Figure 6.
CIC and MC indices for varying restraint scenarios.

CIC Index

HIC. The HIC values were calculated for each restraint scenario (**Figure 7**), and showed that the integrated restraint (261) and 36-inch off-shoulder (215) scenarios minimized HIC values. The largest HIC value (629) occurred in association with the 36-inch on-shoulder scenario. None of the scenarios exceeded the FMVSS limit of 1,000.

Chest Acceleration. Peak chest acceleration is minimized (33.9 g) in the 36-inch height, on-shoulder anchor scenario (**Figure 8**). The largest chest acceleration (50.5 g) occurred in association with the 36-inch height off-shoulder anchor scenario. None of the scenarios exceeded the FMVSS 60-g limit.

Neck Axial Force. The GM IARV for axial neck force is a time-weighted criterion that limits neck tension to 247 lb for no more than 45 msec, and neck compression to 247 lb for no more than 30 msec. Although all scenarios except the integrated restraint exceed the 247-lb tension limit, none of the scenarios maintains that level of force for more than 45 msec (**Figure 9**). The largest peak neck tension (400 lb) occurred in the 36-inch height, off-shoulder scenario. In compression, all scenarios exceed the 247-lb level, but again none of the scenarios maintain this force for the 30-msec tolerance duration. The largest neck compressive force (393 lb) occurred in association with the 47-inch height anchor scenario.

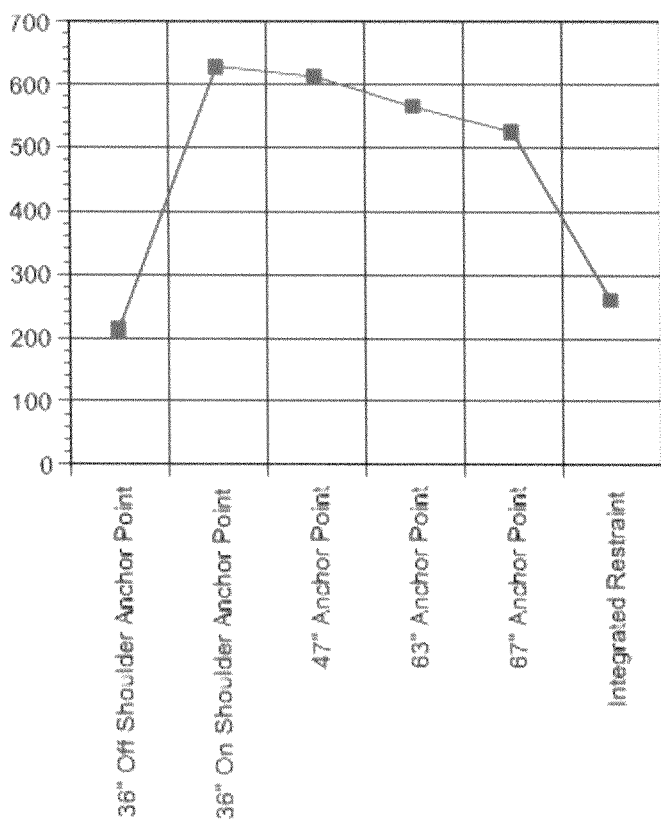

Figure 7.
HIC values for varying restraint scenarios.

Neck Flexion Moment. Three scenarios, the 36-inch on-shoulder, the 47-inch, and the integrated restraint, exceeded the GM IARV of 1,681 in-lb (**Figure 10**). The largest moment (2,870 in-lb) occurred in the 36-inch on-shoulder scenario. The 36-inch off-shoulder scenario produced the smallest neck flexion moment (111 in-lb).

Neck Shear Force. The GM IARV for neck shear is a time-weighted criterion that limits shear to no more than 247 lb for 45 msec, or no more than 337 lb for 25 msec, or 697 lb for any duration. The 36-inch on-shoulder and 47-inch anchor scenarios nearly exceed the 2nd tier of the IARV; both exceed 337 lb for 24 msec (**Figure 11**). This is only 1 msec less than the allowed duration at 337 lb. The largest neck shear forces occurred in association with the 36-inch on-shoulder (633 lb) and the 47-inch anchor (665 lb) scenarios. The 36-inch off-shoulder scenario resulted in the smallest (92 lb) peak neck shear, with the integrated restraint scenario producing the lowest on-shoulder peak neck shear value (357 lb).

CIC Index. Using the biomechanical measures described above, the CIC index value was calculated for each scenario (**Figure 6**). The 36-inch height, off-shoulder scenario resulted in the lowest CIC index value (0.39), with the integrated restraint scenario producing the lowest on-shoulder scenario CIC value at 0.51. The largest CIC value (0.84) occurred in association with the 36-inch on-shoulder restraint scenario.

DISCUSSION

The comprehensive evaluation conducted in this study illustrates the crash-protection benefits of an integrated restraint system for wheelchair occupants. As long as individual injury criteria are not exceeded, lower CIC and MC index values are more desirable, as they represent reduced injury risk. Trends in these indices can be used when attempting to compare various occupant protection features. The MC index is minimized in the integrated restraint scenario, and with the exception of the unsafe 36-inch off-shoulder scenario, the CIC index is also minimized in the integrated restraint scenario.

This study highlights the need to examine both kinematic and biomechanical responses to crash conditions

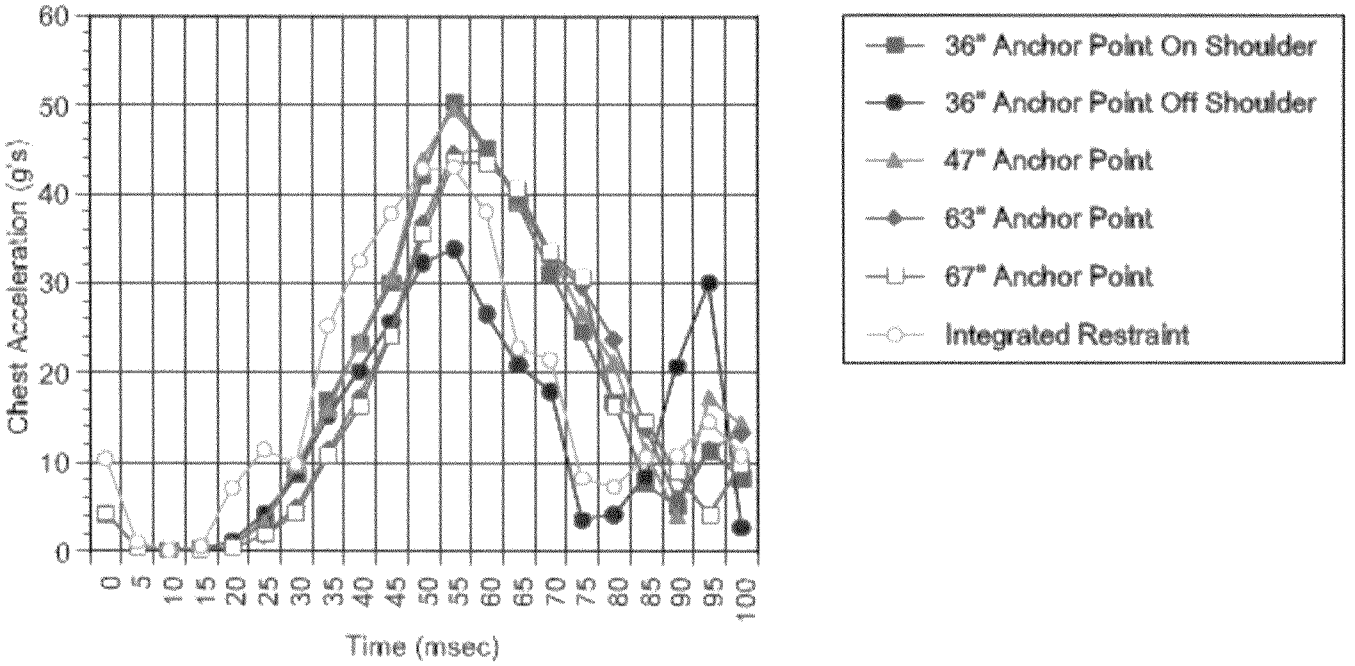

Figure 8.
Chest acceleration time histories for varying restraint scenarios.

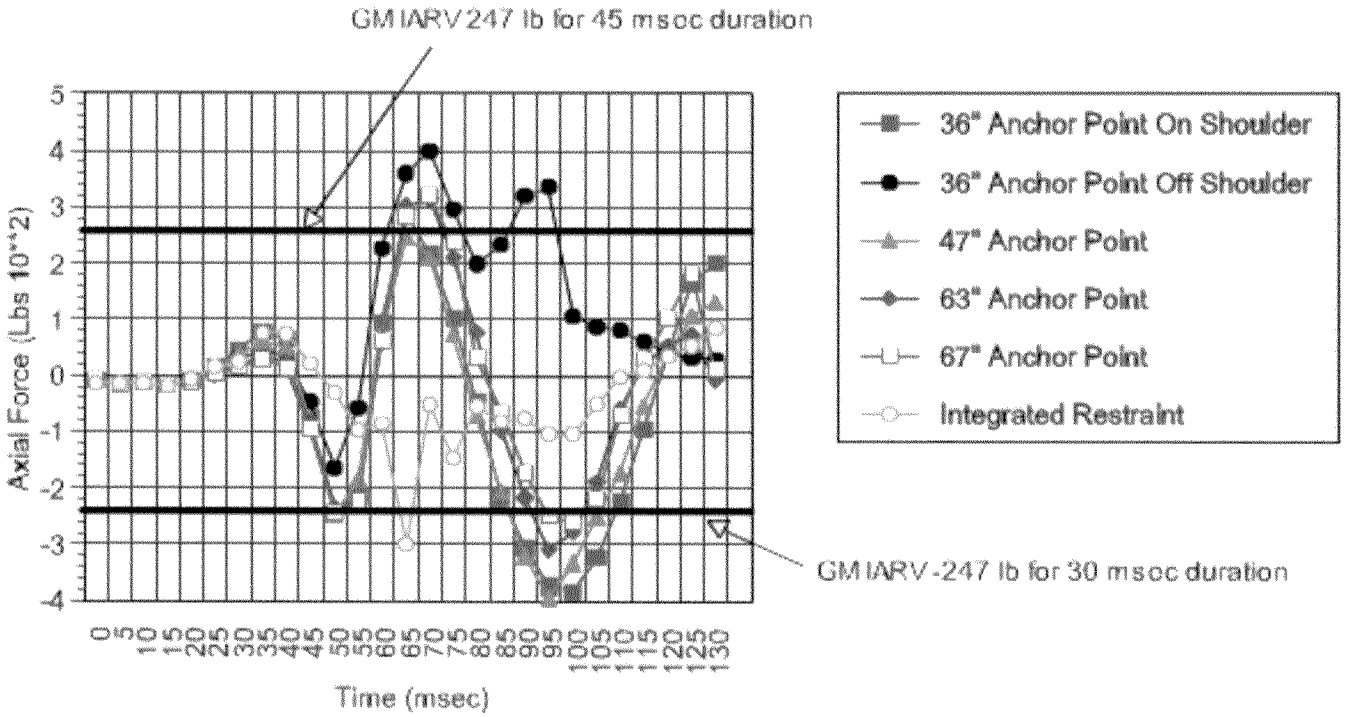

Figure 9.
Neck axial force time histories for varying restraint scenarios.

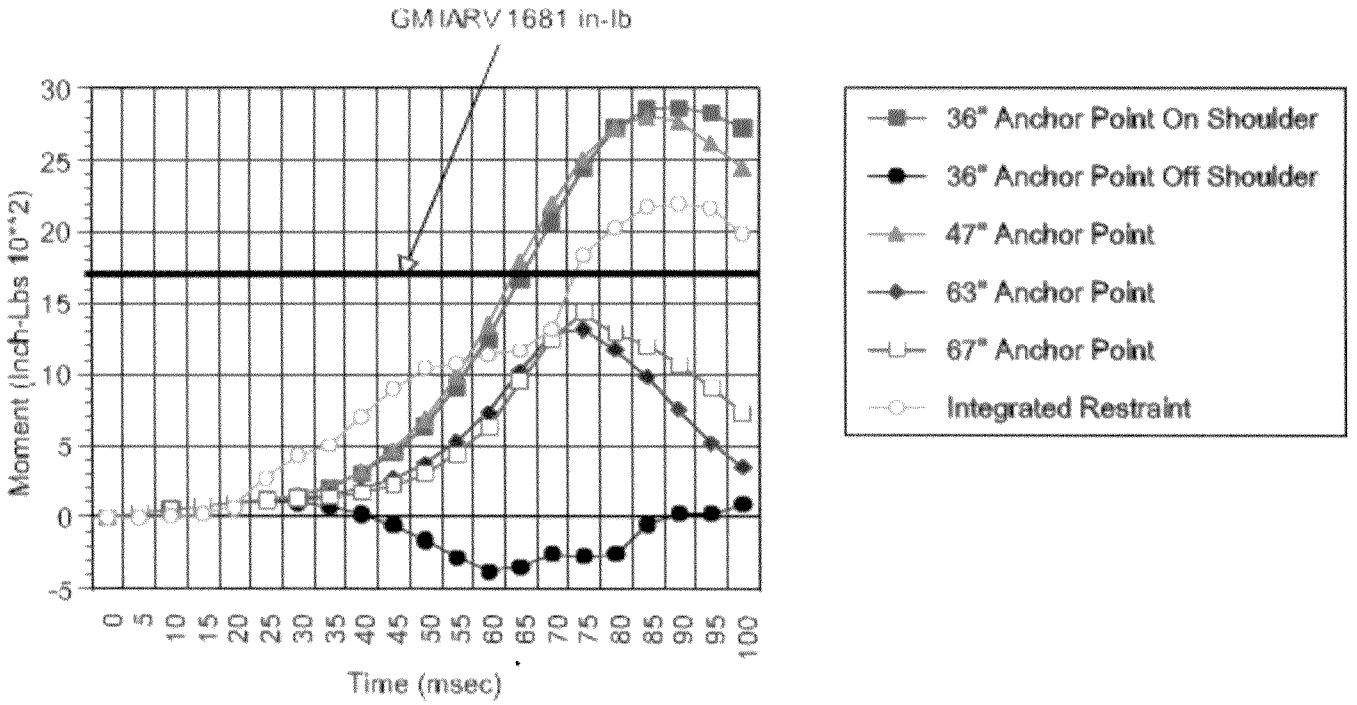

Figure 10.
Neck moment time histories for varying restraint scenarios.

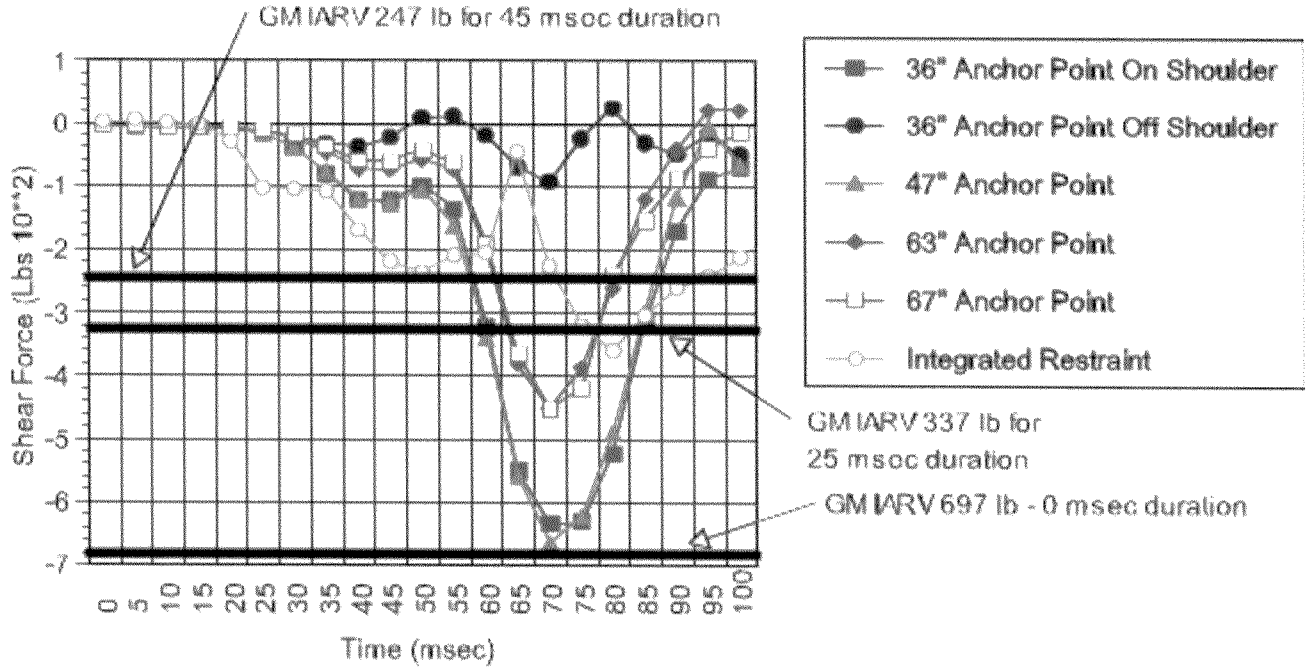

Figure 11.
Neck shear force time histories for varying restraint scenarios.

when comparing various scenarios. For example, the 36-inch height, off-shoulder scenario results in the lowest CIC value because occupant loading is reduced through ineffective restraint; but this scenario produces the highest MC value and exceeds the SAE forward head excursion limit (**Table 3**). The absence of belt loading on the occupant results in a low CIC value representative of reduced internalized crash forces. Despite lower internalized crash forces, the excessive forward head excursion resulting from this scenario could lead to severe injury in the case of secondary impact with the vehicle interior. Clearly, the 36-inch off-shoulder scenario is an unsafe and ineffective restraint scenario as evidenced by exceeding the SAE head excursion limit. **Table 3** highlights other anchor scenarios that exceed, or approach, injury criteria or kinematic limits. Those scenarios that produce an occupant response for which any of the injury criteria or kinematic limits are exceeded should be viewed as unsafe.

Table 3.
Anchor Scenarios Exceeding Individual Injury Criteria.

Anchor Scenario	Criteria or Limitation Exceeded
36″ height off-shoulder	Head Excursion
36″ height on-shoulder	Neck Shear Force (1 msec short of exceeding limit)
47″ height	Neck Shear Force (1 msec short of exceeding limit)

With the exception of the unsafe 36-inch off-shoulder scenario, the CIC value decreases with increasing vehicle-mounted shoulder belt anchor height. This trend in the CIC value is largely dominated by HIC values, neck moments, and neck shear forces. In general, configurations that effectively restrain the occupant are associated with higher forces applied to the body. However, occupant excursions are reduced in scenarios with effective restraint. For example, peak head excursions are lower in the integrated, 36-inch height on-shoulder, and 47-inch height scenarios. This reduction in head excursion is likely due to the shorter lengths of webbing, which limit belt stretching.

As indicated in **Table 3**, two of the restraint anchorage scenarios approached the GM IARV limit for neck shear force. Of particular concern is the 47-inch height configuration, which complies with SAE J2249 design guidelines for shoulder belt anchorage installation. (Anchorage configurations located above 47 inches produced neck loads complying with GM IARVs.) It is important to note that neck forces and moments were not experimentally measured in the validation efforts of the simulation model used in this study. (The Dynaman neck model, as well as the entire body representation, used in this study has been validated to the Hybrid III 50th-percentile ATD [22,23,24]). Unfortunately, sled tests conducted to evaluate the Wheelchair Tiedowns and Occupant Restraint Systems (WTORS) or wheelchair compliance with standards do not typically include measurement of neck forces and moments. However, one previous series of 20g/30mph frontal impact sled tests, conducted using the SAE surrogate wheelchair and Hybrid III 50th-percentile male ATD measured neck shear forces that exceeded the second tier of the GM IARV (337 lb for 24 msec; reference 25). Although it is not possible to directly compare these sled test results to simulations conducted in this study, these experimental results suggest that neck shear produced during 20g/30mph frontal impacts may expose wheelchair-seated occupants to increased risk of neck injury.

Injuries that may result from excessive shear force applied to the neck include anterior and posterior atlantoaxial subluxation, transverse ligament ruptures, or odontoid process fractures (26,27,28). Future efforts should include sled testing with ATD neck instrumentation to measure neck forces and moments for use in injury risk assessment and model validation. It should be noted, however, that previous studies have questioned the biofidelity of the Hybrid III neck, documenting a loading response that differs from that of human cadavers and volunteers (29,30). Additional studies have also challenged the usefulness of the neck shear injury criterion, suggesting that neck torque about the occipital condyles, rather than neck shear or axial force, is a better predictor of neck trauma severity (31,32).

Through the use of integrated restraints, the occupant is better "coupled" to the wheelchair, and these integrated restraints allow the occupant to "ride down the crash" at the same rate as the wheelchair. Occupant coupling with the wheelchair, which is secured to the vehicle, effectively reduces the occupant crash pulse. This effect is reflected in the lower CIC and MC values. Previous studies, such as by Wainright and others, of integrated restraint systems used with OEM vehicle seats have shown reduced HIC values and lower chest accelerations as compared to vehicle-mounted restraint systems (11). Similarly, Johnson Controls has indicated that their Integrated Structural Seat (ISS) produced HIC values 40 percent lower than conventional seats and vehicle mount-

ed restraint systems (10). Our findings replicate those of Wainwright and Johnson Controls, with the wheelchair integrated restraint scenario producing the lowest on-shoulder HIC value and chest acceleration.

Alternate methods to those proposed could investigate weighing head and knee excursion measures (used to calculate MC) based upon their probability of inducing severe injury. That is, head excursion could be given greater weighting than knee excursion because secondary head impact with the vehicle interior would present a greater risk of severe injury than impact of the knee with the vehicle interior. Using the weighting method established for the CIC index based upon accident statistics and severity data, a modified MC index would weight head excursion by 0.89 and knee excursion by 0.11. Wheelchair excursion could be eliminated from the modified MC equation because injury associated with forward wheelchair excursion would be detected through head and knee excursions. Wheelchair loading of the occupant as described through the ratio of wheelchair excursion to knee excursion could also be eliminated from the MC index, as occupant loading would be obvious through neck moments and loads evaluated in the CIC index. Such modifications to the MC index would result in modified MC values shown in **Figure 12**. As shown, the modified MC index would place greater emphasis on the increased injury risk associated with the excessive head excursion of the 36-inch off-shoulder scenario. If the CIC index and the MC index were to be combined into one index then it is necessary that the appropriate weighting be applied (i.e., the modified MC index) so as to not dilute those scenarios that produce occupant responses that exceed injury criteria or limits.

A limitation of this study is that injury risks associated with chest compression and abdominal loading/compression are not included in the CIC index. Future efforts will include the development of an occupant model capable of predicting submarining and evaluating chest compression. To develop a validated model, it will be

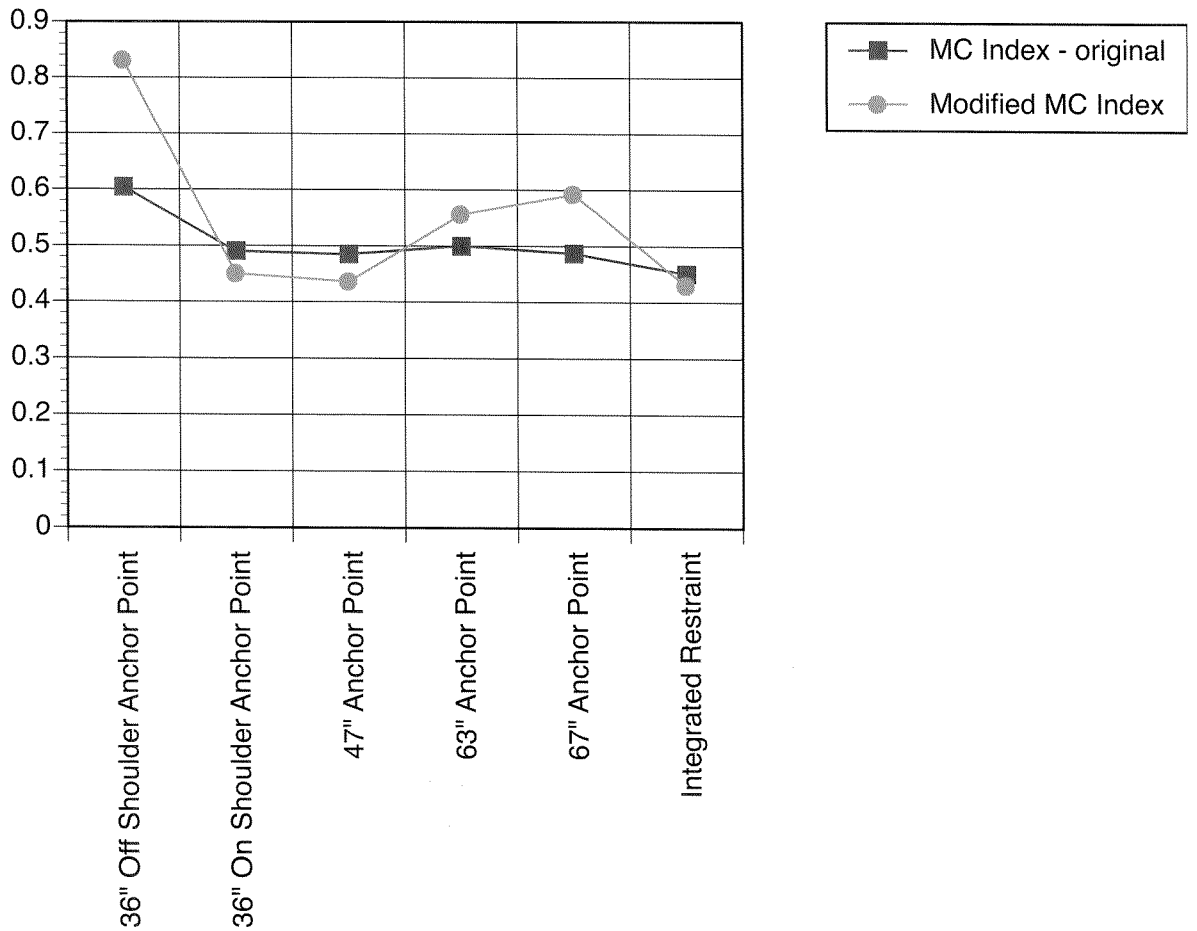

Figure 12.
Comparison of modified MC *versus* MC index for varying restraint scenarios.

necessary to conduct a series of sled impact tests using an appropriately instrumented Hybrid III ATD. This would include the use of a frangible abdomen, as well as potentiometers positioned to evaluate chest compression.

This study supports the ANSI/RESNA WC-19 requirement of wheelchair integrated lap belts to be phased in over a 2-year period. The ANSI/RESNA WC-19 standard, along with the SAE J2249 WTORS standard, have served to greatly improve wheelchair occupant protection during transportation. A major factor leading to this improved protection is that these standards require dynamic testing to 20g/30mph frontal impact conditions. Accordingly, wheelchairs with their integrated lap belts (ANSI/RESNA WC-19), as well as vehicle-mounted occupant restraints provided with WTORS (SAE J2249), are subjected to 20g/30mph impact testing for compliance with these standards. Complete occupant restraint integration, as described in this study, represents the next step in providing enhanced wheelchair occupant crash protection.

CONCLUSIONS

Previous automotive safety studies have shown that integrated restraints provide superior occupant crash protection. This preliminary study reviewed the operational benefits and evaluated the crash effectiveness of the integrated restraint concept applied to using a wheelchair as a motor vehicle seat. Through a comprehensive comparative analysis of injury risk associated with various restraint configurations, it was shown that a wheelchair integrated restraint system provides the most effective crash protection. The benefits associated with the customized fit of integrated restraints are even more profound in wheelchair transportation because variations in wheelchair seat height across a mixed occupant population lead to poor belt fit when attempting to use vehicle-mounted restraint systems. This preliminary study emphasizes the need for transfer of integrated restraint technology to the wheelchair transportation industry.

ACKNOWLEDGMENTS

This work was supported by the STTR-NIH grant "Evaluation of a Wheelchair-Integrated Restraint System" awarded to the University of Pittsburgh. Additional support was provided by the University of Pittsburgh NIDRR RERC on Wheeled Mobility. The opinions expressed in this manuscript are those of the authors and do not necessarily reflect the views of the funding agencies.

REFERENCES

1. Adomeit D, Heger A. Motion sequence criteria and design proposals for restraint devices in order to avoid unfavorable biomechanic conditions and submarining. SAE Paper No. 751146, 1975.
2. Leung Y, Tarriere C, Lestrelin D, Hureau J, Got C, Guillon F, et al. Submarining injuries of 3 point belted occupants in frontal crashes. SAE Paper No. 821158, 1982.
3. American National Standards Institute (ANSI)/Rehabilitation Engineering Society of North America (RESNA). WC-19 wheelchairs used as seats in motor vehicles. ANSI/RESNA, 1999.
4. SAE. SAE J2249 wheelchair tiedowns and occupant restraints (WTORS) for use in motor vehicles. Society of Automotive Engineers (SAE), 1996.
5. Bertocci G, Digges K, Hobson D. Shoulder belt anchor location influences on wheelchair occupant crash protection. J Rehabil Res Dev 1996;33(3):279–89.
6. NHTSA. Advanced notice of proposed rulemaking, occupant crash protection. CFR Vol 57, No 104, 1992.
7. Bertocci G. City of Pittsburgh, transportation directors survey on restraint usage. Unpublished, 1995.
8. Bertocci G, Digges K, Hobson D. Development of transportable wheelchair design criteria using computer crash simulation. IEEE Trans Rehabil Eng 1996;4(3):171–81.
9. Horsch J, Viano D, Mertz H. Thoracic injury assessment of belt restraint systems based on Hybrid III Chest Compression. SAE Paper No. 912895, 1991.
10. Lynch T. Integrated seat adds safety, design convenience. Design News Vol. 43, October 1995.
11. Wainwright J, Verellen L, Glance P. Integrated restraint seat with composite frame. SAE Paper No. 940218, 1994.
12. Ruter G, Hontschik H. Protection of occupants of commercial vehicles by integrated seat/belt systems. SAE Paper No. 791002, 1979.
13. White CE. Dynamic sled test results—integrated child seat. 1994.
14. Nilson G, Haland Y. An analytical method to Assess the risk of the lap-belt slipping off the pelvis in frontal impacts. SAE Paper No. 952708, 1995.
15. Bertocci G, Digges K, Hobson D. Development of a wheelchair occupant injury risk assessment method and its application in the investigation of wheelchair securement point influence on frontal crash safety. IEEE Trans Rehab Eng 2000;8(1):126–39.
16. NHTSA-GM. General Motors submission USG 2284. App. E. NHTSA Docket 74-14 Notice 32, 1983.
17. DOT. FMVSS crash protection systems. Department of Transportation (DOT), 49CFR Part 571.208, 1993.
18. Versace J. A review of severity index. SAE Paper No. 7100881, 1991.
19. Viano D, Arepally S. Assessing the safety performance of occupant restraint systems. SAE Paper No. 902328, 1990.

20. Hackney J, Kahane C. The new car assessment program: five star rating system and vehicle safety performance characteristics. SAE Paper No. 950888, 1995.
21. Kang W, Pilkey W. Crash simulations of wheelchair occupant systems in transport. J Rehabil Res Dev 1998;35(1):73–84.
22. Fleck J, Butler F. Validation of crash victim simulator, vol 2: validation effort. Calspan Corp, DOT-HS-6-01300, 1982.
23. Khatua T, Cheng L, Piziali R. (1988). ATB simulation of Hybrid III dummy in sled tests. SAE Paper No. 880646, 1988.
24. Rizer A. ATB/Dynaman neck validation effort. Personal communication, March 1997.
25. Shaw G. Sled testing of wheelchair and Hybrid III occupant in frontal, side and rear impact conditions—Tests 396, 397, 398, 399. University of Virginia Auto Safety Laboratory, 1996.
26. Braakmen R, Vinken P. Unilateral facet interlocking in the lower cervical spine. J Bone Joint Surg 1967;49B(2):249–57.
27. Montane I, Eismont F, Green B. Traumatic occipitoatlantal dislocation. Spine 1991;16(2):112–16.
28. McElhaney J, Myers B. Biomechanical aspects of cervical trauma. In D. Nahum and J. Melvin editors, Accidental injury biomechanics and prevention. New York: Springer Verlag, 1993. p. 319–22.
29. Wismans J, Spenny C. Head–neck response in frontal flexion. SAE, SAE Paper No. 841666, 1984.
30. Seeman M, Muzzy W. Comparison of human and Hybrid III head and neck dynamic response. SAE Paper No. 861892, 1986.
31. Mertz P, Patrick L. Investigation of kinematics and kinetics of whiplash. SAE Paper No. 670919, 1967.
32. Mertz H, Patrick L. Strength and response of human neck. SAE Paper No. 710855, 1971.

Submitted for publiccation May 13, 1999. Accepted in revised form February 24, 2000.