Department of Veterans Affairs

Journal of Rehabilitation Research and Development Vol. 37 No. 6, November/December 2000
Pages 675–680

A body-powered functional upper limb orthosis

Tariq Rahman, PhD; Whitney Sample; Rahamim Seliktar, PhD; Michael Alexander, MD; Mena Scavina, DO
Alfred I. duPont Hospital for Children, 1600 Rockland Road, Wilmington, DE 19899; School of Biomedical Engineering, Science and Health Systems, Drexel University, 32nd and Chestnut Sts, Philadelphia, PA 19104

Abstract—This paper describes the development and preliminary testing of a functional upper-limb orthosis for people that have limited strength in their arms. This is symptomatic of conditions such as muscular dystrophy (MD), spinal muscular atrophy (SMA), and partial spinal cord injury. The exoskeletal orthosis is wheelchair mounted, has two links and four degrees of freedom. It uses linear elastic elements to balance out the effects of gravity in three dimensions. Preliminary results on testing with ten subjects will be presented.

Key words: *exoskeleton, gravity balancing, neuromuscular weakness, orthosis.*

INTRODUCTION

An orthosis is defined as any medical device applied to, or around, a bodily segment in the case of physical impairment or disability (1). Orthosis is also another term for the group of devices variously called orthopedic appliances, braces, splints, calipers, and supports. This definition could also be extended to a functional support that assists or augments a person's movement. It is this last classification of an orthosis, applied to the upper limb, that will be the focus of this paper.

The orthosis will provide a sense of "flotation" for a person's weakened arms within the full range of three-dimensional movement. People with neuromuscular abnormalities may lose the ability to place the arm in space due to the weakening of proximal muscles, but distal muscle function is less affected and sensation remains intact. Even with MD, finger use is preserved late in the condition (2). People with these disorders all share the frustration of significant dependency on their caregivers for personal care. The goal of this work is to reduce this dependency by developing instrumentation to enable users to regain or retain the ability to complete many tasks independently.

The targeted clinical population consists of individuals who have neuromuscular abnormalities that leave them with muscular weakness. These individuals fall into two categories: those with anterior horn cell disease or those with muscular disorders. Anterior horn cell disease can be further divided into arrested and progressive. Individuals with arrested anterior horn cell disease include people who have had viral paralysis, such as polio, or who have experi-

This material is based on work supported by the Nemours Foundation, A.I. duPont Hospital for Children, PO Box 269, 1600 Rockland Road, Wilmington, DE 19899; and by the U.S. Department of Education (grant # H133E30013), 400 Maryland Avenue SW, Washington, DC 20202.

Address all correspondence and requests for reprints to: Tariq Rahman, PhD, Department of Research, Alfred I. duPont Hospital for Children, 1600 Rockland Road, Wilmington Delaware 19899; email: trahman@nemours.org.

enced intrauterine anterior horn cell death, which is often seen in individuals with arthrogryposis multiplex congenita. Individuals with progressive anterior horn cell loss include those with spinal muscular atrophy (SMA), of which there are three types: type I (Werdnig-Hoffman), type II (intermediate), and type III (Kugelberg-Welander). Most subjects for this study have the type II form. In this disorder, weakness is severe, and can be slowly progressive. The incidence of SMA is estimated to be 1 per 5,000 live births in the US (3).

The second category of individuals with muscular weakness includes disorders such as Duchenne and Becker MD; congenital myopathies such as nemaline, myotubular, and central core; and some of the rare mitochondrial dystrophies that have abnormalities of the muscle fiber. The incidence of Duchenne MD in the US is 1 in 3,500 male births, and the incidence of Becker MD is 1 in 30,000 live male births (4). In both types of disorders the proximal musculature of the upper and lower limbs is affected and individuals lose the ability to use their arms and legs. All of these individuals may potentially benefit from an upper limb orthosis.

Background

Articulated upper limb orthoses have been investigated for a number of years. These range from the mobile arm support to electrically powered wrist-hand orthoses (WHO; reference 1). Among the earliest and most accepted devices is the Balanced Forearm Orthosis (BFO; reference 5) also called the mobile arm support. The BFO, a passive (body-powered) device, was developed in 1965. It provides a person with weak musculature the ability to move their arms in a horizontal plane. Two linkages that have joints along the vertical axes accomplish this. One end of the BFO is attached to a wheelchair; the other end is connected to a trough into which a person places their forearm. The trough uses a fulcrum at mid-forearm that permits the hand to elevate if the shoulder is depressed. The BFO allows a person to move horizontally, for example, over a lap tray, and to use compensatory movements to attain limited movement in the vertical direction.

An enhanced version of the BFO allows vertical movement by providing a horizontal joint at the base. Attaching rubber bands to the joint compensates for the weight of the arm. Because of the inexact gravity compensation that results, this device is rarely prescribed. The majority of BFO users settle for planar movement and rely on compensatory body movements to achieve vertical motions.

Various forms of overhead slings that allow for movement in three dimensions have also been used to assist arms with proximal weakness. These devices, in addition to being aesthetically unappealing, are prone to oscillations when the arm is moved. One such overhead device is the Musgrave orthosis (6), which uses a weight at the back of a wheelchair to counter-balance the arm.

The first computerized orthosis was developed at the Case Institute of Technology in the early 1960s (7). The manipulator was configured as a floor-mounted four-degree-of-freedom externally powered exoskeleton. Control of this manipulator was achieved using a head-mounted light source to trigger light sensors in the environment. Rancho Los Amigos Hospital continued the Case orthosis and developed a six-degree-of-freedom electrically driven "Golden Arm" (8). The Rancho "Golden Arm" had a configuration similar to the Case arm but no computer control. It was significant, however, in that it was mounted on a wheelchair and was found to be useful by people who had disabilities with intact sensation resulting from polio or multiple sclerosis (MS). The Rancho "Golden Arm" was controlled at the joint level by seven tongue-operated switches, which made operation very tedious. Moe and Schwartz (9) modified the arm by adding computer control and input from eye trackers.

In 1975, The Burke Rehabilitation Center modified the BFO by adding actuators (10). Direct current motors powered the Burke orthosis, with five degrees of freedom including pronation/supination and elbow flexion/extension. However, control was maintained through use of a joystick, control pad, or various microswitch assemblies, making it a less-than-ideal interface.

Examples of other orthoses that have not gone beyond the prototype stage include the hybrid arm orthosis (HOA; reference 11), which was externally powered and controlled by a combination of contralateral shoulder movement and air switches operated by the head; and the powered orthotic device for the enhancement of upper-limb movement (PODEUM; reference 12). This project was conducted at The Hugh Macmillan Rehabilitation Center and targeted people with amyotrophic lateral sclerosis (ALS). The mechanism allowed three degrees of freedom, used external power, and was controlled by EMG signals from the eyebrows.

The University of Newcastle-upon-Tyne in the United Kingdom is developing a new Motorized Upper Limb Orthotic System (MULOS; reference 13). The project has developed modular orthotic units that will take

the form of a five-degree-of-freedom powered upper-limb orthosis and is designed to work in three different modalities: assistive, exercise, and continuous passive motion (CPM). This project, however, is not addressing the control issue.

While the orthosis projects listed in this section have advanced the state of the knowledge in design of orthoses that interact with humans with disabilities, this technology has yet to make a significant impact on the lives of people with disabilities. This is in large part due to the complex control requirements of the devices and the prohibitive cost of powered devices. This project concentrates on making the human-machine interface as natural as possible and keeping the eventual cost down by utilizing the stored energy in springs.

Simplicity is achieved by identically canceling out the nonlinear effect of gravity by an appropriate variation in the spring force. The result is a passive device that is gravity balanced for complete 3-D movement. This scheme has not previously been used in an orthosis. The scheme, coupled with strong consumer involvement, will be key to the success of this project.

Consumer Input

In the initial phase of the project, consumers were invited to provide input. Two meetings were organized (14) at the duPont Hospital for Children, where people with SMA or Duchenne MD were invited with their families. The objective of the meetings was to identify the users' preferences for the type of assistance the orthosis should provide. Four families attended the first meeting, and five families attended the second meeting. Ages ranged from 5 to 23 years with a median age of 13.5 years. All but one subject were male.

During the meetings, the participants were encouraged to suggest ideas and were also introduced to existing technology and pilot developments in the robotics lab at the duPont Hospital for Children. The equipment demonstrated was the BFO, an overhead sling, a robot that acted as a test-bed for a powered orthosis, an early prototype of the orthosis equipped with a gravity-compensation mechanism, and two other commercial rehabilitation robots. General observations were made by the research team with regard to functional management strategies employed by the subjects with MD, in particular, those relating to self-feeding.

A list of preferred tasks was then supplemented with data from surveys done by Stanger (15) and Prior (16), and an aggregate list of suggestions was presented to the group to make a selection of their top five task choices. The findings of the meeting are summarized in Rahman, et al. (14). What became apparent was that feeding, grooming, and manipulating objects on tables were the most desirable functions. It also became evident from these discussions that user preference was to have an orthosis system rather than a robotic assistive device. Other issues also emerged, including the need to have an unobtrusive and inexpensive device.

During the preliminary phases of the project, consumer input has continually been sought. This has taken the form of meetings held once a month with 3 or 4 children and their families, testing of the prototypes with individual consumers, and receiving feedback from the MD Association clinic visits once every two weeks at the duPont Hospital for Children. To date approximately 20 consumers have been involved in the study. Involvement has ranged from filling out questionnaires to trying out prototypes. This consumer involvement has been invaluable in shaping the direction of the project and arriving at the present prototype.

Orthosis Development

The goal of the orthosis is to provide a sense of "floatation" that would allow a person with neuromuscular weakness to move his/her arms. This would be accomplished by gravity-balancing the entire arm (hand, forearm, upper arm) for all positions in 3-D motion, thus requiring minimal effort to move the arm. Subsequent to the consumer meetings, various prototypes were developed and evaluated. These can be seen in **Figures 1** and **2**.

It was concluded that the best design would be exoskeletal in appearance, as shown in conceptual form in **Figure 3**. It would consist of four degrees of freedom (two at the shoulder and two at the elbow).

The first prototype was a proof of concept. It had two joints at the elbow and two at the shoulder (**Figure 1**). It used bungee cords placed external to the orthosis on the back of a chair. Power from the bungees was transmitted through Bowden cables to the joints of the orthosis. Although this prototype proved the anti-gravity concept, it had inherent friction problems and was not aligned well with the anatomical joints. The next prototype (**Figure 2**) used linear springs enclosed in the orthosis and allowed for elbow misalignment by using multiple pivots at the elbow. This version, however, still had high friction, potential pinch points, and was too big and unacceptable to potential users.

Journal of Rehabilitation Research and Development Vol. 37 No. 6 2000

Figure 1.
First prototype with bungee cords attached to the back of the chair. Power transmitted through Bowden cables.

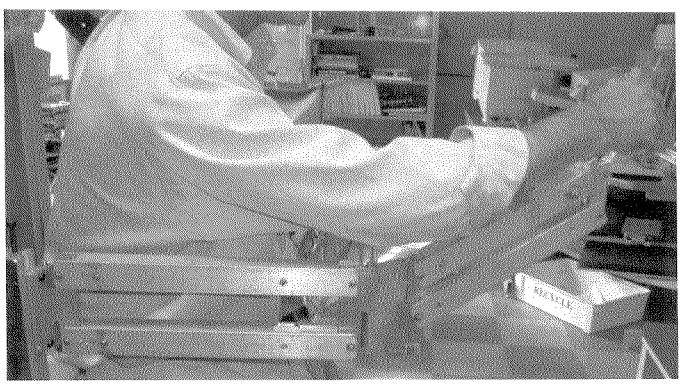

Figure 2.
Second prototype with coil springs encased in the linkage.

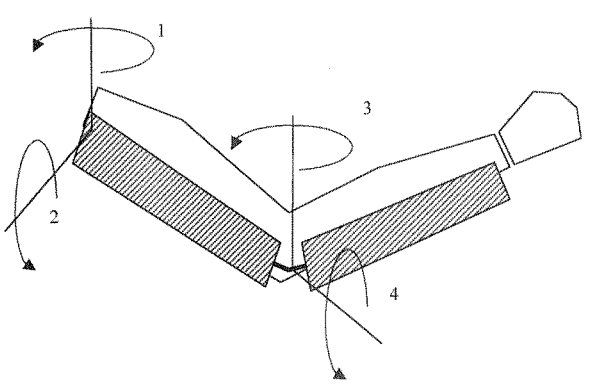

Figure 3.
Joint configuration for the orthosis.

The final prototype can be seen in **Figure 4**. Although this version, in principle, is the same as the previous one, it had a number of desirable features: low friction, adjustability for people of various weights, a more anatomically correct elbow joint, and a minimal number of pinch points.

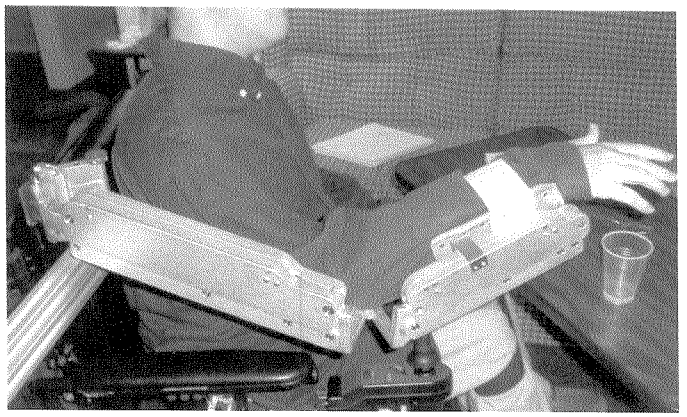

Figure 4.
Final prototype shown with one of the test subjects.

Gravity Compensation

Gravity balancing may be achieved either by 1) adding counter weights or 2) using spring energy to offset gravity. The first approach does provide a system that is balanced for all positions; however, this is achieved at the expense of added weight, inertia, and a larger profile. The spring approach is more attractive because no undue energy is added to the system and the resulting device is more compact. Because the moment due to gravity is configuration dependent, it is nonlinear.

A perfectly balanced system would use nonlinear springs; however, construction of customized nonlinear springs is complex and the results may not be compact enough. The alternative is to use off-the-shelf linear springs and create a nonlinear restoring moment through geometrical variation of the moment arm. This is the approach taken by Ulrich and Kumar (17) who used linear springs and cams to achieve weightlessness; however, this method required the fabrication of specific cam shapes. Herve (18) also used linear springs to exactly balance a link for all positions; however, the geometry is complex and impractical to use for more than one link. Selection of the appropriate linear elastic elements used in this study is based on theoretical considerations outlined in (19).

Use of springs for gravity compensation does, however, introduce lightly damped oscillatory behavior, which is evident in precision tasks, such as handwriting. The impact of the oscillations will be assessed during clinical trials, and if necessary, damping elements will be used.

Figure 5 shows a 1-DOF case where a link pivoted at O is perfectly balanced by a linear spring. The required stiffness, K, is given by

$$K=mgl/ab \quad [1]$$

where b denotes the length wo and a denotes the length ov. The resulting stiffness of the spring is independent of the angle θ, the angle of elevation. However, this result is valid only under the assumption that the unstretched length of the spring is zero. This condition may be physically realized if the tension spring were placed outside the line connecting wv.

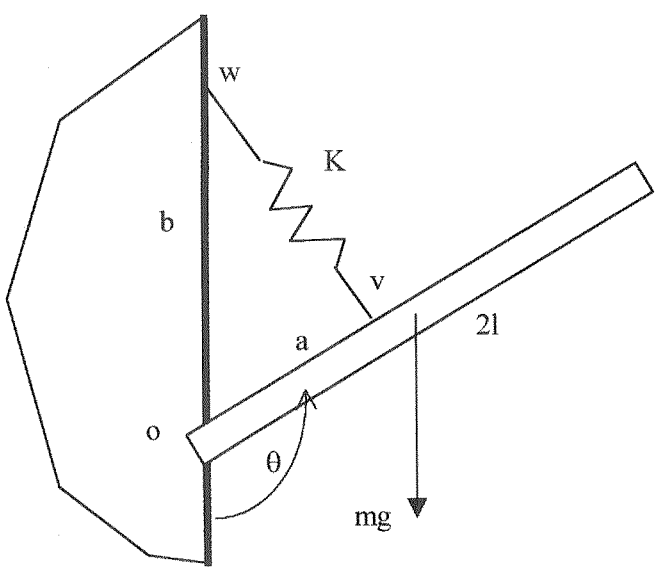

Figure 5.
One-degree-of-freedom link supported by a linear spring in the vertical plane.

Therefore, with judicious choice of the linear elastic elements, the arm and orthosis can be perfectly balanced for 3-D movement. Linear elastic elements (bungee cords) were selected over springs because of a) their ability to be stretched over pulleys and b) their superior elastic properties (for a given unstretched length, bungee cords stretch more than typical coil springs, and their initial force requirements are less than coil springs). A lead screw adjusts the tension in the spring, thus allowing the accommodation of people of varying weights.

Pilot Testing

To date, the orthosis prototype has been informally tested with 10 subjects. Nine subjects have MD (seven with Duchenne MD, one with Beckers MD and one with congenital MD). Nine subjects were male and one was female. The ages ranged from 8–21. Two of the subjects had used a BFO previously; however, they had abandoned it as they got weaker. Independent Review Board approval was obtained prior to testing. The evaluation was performed either in the lab or at the subject's home. The orthosis was mounted on an adjustable stand in order to accommodate various wheelchairs. It was placed so that the subject's shoulder joint was just above the anatomical shoulder. The subjects were asked to place their right arm in the orthosis trough; the arm was then secured by a velcro strap. The orthosis bungee cords were then stretched or relaxed based on their observed "flotation." After being allowed to move their arm at will, the subjects were asked to perform a few activities of daily living while a video recording was made. The activities included eating, reaching, and typing.

The purpose of this preliminary trial was to determine the size requirements of the subject, and to identify any design and psychosocial issues before producing the first batch of orthoses in preparation for the formal clinical trials. One area of concern that emerged was the need to have a flexible attachment to the wheelchair that would allow for shifting of body weight in the wheelchair.

DISCUSSION

The informal nature of the pre-testing precluded gathering of any quantifiable data. However, much insight was gained into the design of the orthosis. As is the case with other assistive technology, a number of criteria must be met in order for this to be a viable commercial product. Foremost was the functionality of the device. Given the nature of the sizeable addition to the wheelchair, it is imperative that the orthosis provide a level of function that was not previously possible. Further, this added functionality must offset the expense and perceived appearance of the device. This was expressed repeatedly by the subjects and their parents.

A number of subjects stipulated that it was insufficient for the orthosis to just improve on existing function; it also

must offer the opportunity to accomplish tasks that were previously not possible. A number of subjects accomplish necessary tasks such as eating by compensating with other body parts or by using specially designed utensils and objects. The orthosis would have to fit into their lives extremely well before they would give up using compensatory movements.

Five of the subjects were very excited about the possibilities the orthosis offered. Their parents echoed this feeling. The orthosis would afford them the opportunity to eat unassisted, to perform educational activities such as computer access and turning pages, and to scratch their face. Two of them were especially excited to be able to eat independently again after a long time of being unable to do so.

One of the subjects, despite performing well with the orthosis, had a more cynical outlook towards the technology and was critical of the orthosis, but was unwilling to offer suggestions to improve it. This subject did agree to participate in the evaluation despite his reservations. Two of the subjects had enough strength to accomplish most tasks but would in all probability be candidates in the future, given the progressive nature of MD. One of the older subjects with MD, who is a college student, was very eager to try the device; however, he did not have enough strength in the shoulders to overcome the minimal force requirement. This subject would be a candidate for a powered orthosis.

Two of the other subjects with Duchenne MD weighed about 180 lbs, which was over the limit of the existing prototype. Their weight level will be included in the batch of five orthoses that are presently being manufactured.

Clinical trials of the orthosis will begin once five prototypes of various sizes are constructed. These will be evaluated in a home setting, then in the lab, to measure performance for specific tasks. A comparison will be made with the existing balanced forearm orthosis.

ACKNOWLEDGMENTS

Thanks to Rungun Ramanathan and Sean Stroud for their help in the design and fabrication of the early prototypes, and to Alisa Clark for assistance with the testing.

REFERENCES

1. Lunsford TR, Wallace JM. The orthotic prescription. In: Goldberg B and Hsu J, editors. Atlas of orthotic and assistive devices—biomechanical principles and applications (Third Edition). Mosby; 1995.
2. McDonald CM, Abresch RT, Carter GT, Fowler WM Jr, Johnson ER, Kilmer DD, Sigford BJ. Profiles of neuromuscular disease: Duchenne muscular dystrophy; Amer J Phys Med Rehabil 1995; 74(5)(Suppl Sept/Oct) S70–91.
3. Bach JR, Lieberman JS. Rehabilitation of the patient with disease affecting the motor unit. In: DeLisa Joel A, editor. Rehabilitation medicine: Principles and practice. 2nd ed. J.B. Lippincott Co. 1993.
4. Boland BJ, Silbert PL, Groover RV, Wollan PC, Silverstein MD. Skeletal, cardiac, and smooth muscle failure in Duchenne muscular dystrophy. Pediatric Neurol 1996;14(1):7–12.
5. Alexander MA, Nelson MR, Shah A. Orthotics, adapted seating and assistive devices. In Pediatric Rehabilitation 2nd ed. Baltimore MD: Williams and Wilkins; 1992. p. 186–7.
6. James WV, Orr JF. Upper limb weakness in children with Duchenne muscular dystrophy—A neglected problem. Prosthetics and Orthotics International, 1984;8:111–3.
7. LeBlanc M, Leifer L. Environmental control and robotic manipulation aids. Engineering in Medicine and Biology Magazine 1982;December:16–22.
8. Allen JR, Karchak A Jr., Bontrager EL. Final project report, design and fabricate a pair of Rancho anthropomorphic manipulator. Technical Report, The Rancho Los Amigos Hospital Inc., 12826, Hawthorm Street, Downey CA 90242, 1972.
9. Moe ML, Shwartz JT. Ocular control of the Rancho electric arm. In: Advances in external control of human extremities, Belgrade: 1973.
10. Stern PH, Lauko T. Modular designed, wheelchair based orthotic system for upper extremities. Paraplegia 1975;12:299–304.
11. Benjuya N, Kenney SB. Hybrid arm orthosis. J Prosthetics and Orthosis 1990;2(2):155–63.
12. Galway R, Naumann S, Sauter W, Somerville J. The evaluation of a Powered Orthotic Device for the Enhancement of Upper-Limb Movement (PODEUM). Final report submitted to The National Health Research and Development Program of Health and Welfare Canada, Project # 6606-3835-59, 1991.
13. Johnson GR, Buckley MA. Development of a New Motorized Upper Limb Orthotic System (MULOS). Proceedings of the Rehabilitation Engineering Society of North America. Pittsburgh PA; June 1997. p. 399–401.
14. Rahman T, Stroud S, Ramanathan R, Alexander M, Seliktar R, Harwin W. Task priorities and design for an arm orthosis. Technol Disabil J 1996;5(2):197–203.
15. Stanger C, Anglin C, Harwin W, Romilly D. Devices for assisting manipulation: a summary of user task priorities. IEEE Trans Rehab Eng 1994 December;2(4):256–65.
16. Prior S. An electric wheelchair mounted robotic arm—a survey of potential users. J Med Eng Technol 1990 July/August; 14(4)143–54.
17. Ulrich N., Kumar K. Passive mechanical gravity compensation for robot manipulators. Proceedings 1991 IEEE Intl Conference on Robotics and Automation. Sacramento. p. 1534–41.
18. Herve JM. Design of spring mechanisms for balancing the weight of robots. Proceedings of the 6th CISM-IFToMM Symposium on Theory and Practice of Robots and Manipulators, 1986, A. Morecki et al., editors. Krakow, Poland, 564–7.
19. Rahman T, Ramanathan R, Seliktar R, Harwin W. A simple technique to passively gravity-balance articulated mechanisms. ASME Transactions on Mechanisms Design 1995 December; 117(4):655–8.