Rory A. Cooper, PhD

JRRD Guest Editorial

Wheelchair research progress, perspectives, and transformation

There is a growing and rich body of wheelchair research and development being generated around the world. A simple search of PubMed using the search term "wheelchair" shows that 259 articles were published in the past year, 566 in the past 2 years, 1,315 in the past 5 years, and 2,241 over the past 10 years. If one narrows the search to "power wheelchair," the number of publications drops precipitously to 31 articles in the past year, 70 in the past 2 years, 156 in the past 5 years, and 265 in the last 10 years. The number of published articles drops even further if the search is specific to the design of new wheelchair technologies. This simple investigation provides some insights worth examining. The output of wheelchair research has risen over the past 10 years: there was a 17 percent increase in the number of total articles published in the last 5 years versus the previous 5 years, although there are natural annual fluctuations. Similarly, there has been about an 18 percent increase in the number of articles related to power wheelchairs, although the overall numbers are quite small. Most of the articles are related to wheelchair usage and clinical assessment, with a few on training.

Wheelchairs are an important modality for mobility, activity, and participation in life. For people with some forms of impairment (e.g., spinal cord injury [SCI]), wheelchairs are the primary means of mobility. Manual wheelchair research seems to be fairly healthy even though many unanswered questions remain. Recent studies have indicated that there are challenges to obtaining high-quality manual wheelchairs. Liu et al. have shown that many ultralight wheelchairs are not compliant with Rehabilitation Engineering and Assistive Technology Society standards and fail prematurely [1]. This research is supported by a study of maintenance and repairs by McClure et al. showing that wheelchairs require frequent repairs and that those repairs start within the first few months of using a new chair [2]. More recently, Riggins et al. showed that there are still gaps in our knowledge about when to provide a wheelchair, to whom, and what training is necessary, even for people with SCI [3]. This study indicated that people with incomplete SCI, who focused on gait training, did not fare as well as their counterparts with complete or higher level lesions who received wheelchair training in terms of community participation and quality of life. As a result of research conducted over the past 10 years, there is greater understanding of wheelchair activity, service-delivery processes, manual wheelchair skills training, and set-up of wheelchairs.

There is a paucity of research into all aspects of power wheelchairs. This is somewhat surprising given the hundreds of thousands of people who use power wheelchairs, including scooters. Power-wheelchair users are also among the most vulnerable members of society in terms of ability to perform activities of daily living, community participation, and employment. Power-wheelchair

users have also faced tremendous pressures from insurance providers to reduce costs. The challenges started when Medicare revised its reimbursement policy in 2007 and introduced new classifications for power wheelchairs that reduced the 42 procedural codes to 4 basic groups [4]. The groups are intended to be founded on performance and user needs. Unfortunately, one result of this process was to severely restrict access to the best wheelchairs, those in group 4, intended for active indoor and outdoor use. Many insurance companies have followed Medicare's lead and cover only power wheelchairs designed primarily for indoor use and light outdoor activities on well-conditioned surfaces. The Department of Veterans Affairs has bucked this trend since part of its mission is to promote independent living, return to employment, and full community participation. More research is needed to determine the long-term impact of these policy decisions on consumers and on power-wheelchair design.

A goal of research is to increase our understanding of the world in which we live and to provide a glimpse into the world of the future. Research into future technologies often requires freedom from current policies and, in many ways, even from conventional wisdom. Research needs to support some transformative technologies that push the limits of current thinking and capabilities to show what life could be like. In the domain of wheelchairs, the Personal Mobility and Manipulation Appliance (PerMMA) is one such technology. PerMMA is a mobile robot base with full power seat functions (tilt, recline, elevation, and leg-rest elevation) with a custom track system around the seat that interfaces with two robotic manipulators (**Figure 1**) [5]. The first generation PerMMA incorporates two Manus ARM (Exact Dynamics; Didam, the Netherlands) manipulators placed on a computer network with the robot base and connected through the Internet to a remote operation station. The remote operation station includes a computer to view data streaming from the PerMMA and to haptic robots (Omni Phantom, Sensable; Wilmington, Massachusetts) mapped to the ARM robots on the PerMMA (**Figure 2**). Control of the PerMMA is maintained by the person in the chair, although control can be shared with a remote assistant and both can operate

Figure 1.
First generation of Personal Mobility and Manipulation Appliance with local interface on the user's lap outside of the Human Engineering Research Laboratories.

the PerMMA together. This allows for tasks to be completed faster and provides for the successful execution of tasks that the user may be unable to perform independently.

PerMMA is intended to provide users with greater autonomy and independence at home and in the community. Unlike most robotic systems, PerMMA is designed as a co-robot. Most robotic systems are designed to work independent of the user, especially in hazardous, remote, or heavy industry applications. Co-robots are intended to work intimately with humans, forming a symbiotic relationship. Working in unstructured environments, and especially natural environments, is a challenge for traditional robots; people are extremely difficult for them to work with. Co-robots work in collaboration with people; therefore, the knowledge of the user and his or her ability to sense and interpret the environment are incorporated into the path planning, prediction, and task performance. Taking this approach, PerMMA can help users perform real-world tasks in natural environments with little or no modification to the environment.

The design team of PerMMA has collaborated closely with engineers, clinicians, social scientists, and consumers to create a vision of the future where people with upper- and lower-limb impairments have far greater autonomy and independence than

any current technology can provide. The second generation PerMMA expanded the capabilities based on the feedback of our team of consumers. This expansion has taken two complimentary directions. First, the original robot arms were dexterous but not very powerful, with a payload of about 3 kg per arm. The consumers wanted an arm that could lift a gallon of milk, pick-up a bag of dog food, and even assist them with transfers (e.g., replace their traditional lift or relieve some of the stress on their caregiver). Second, the robot base was built upon the design of a traditional front drive power wheelchair. Consumers wanted to be able to stay level over uneven terrain (e.g., curb-cuts, ramps) so that they would remain balanced and in control (**Figure 3**). They also wanted to simply be able to drive up/down curbs and over small sets of steps to visit friends/family or public facilities that have yet to become accessible.

To meet these goals, the design team worked to create a strong robotic arm that would be compatible with the track system in the first generation PerMMA. The approach is to have one strong arm and one dexterous arm that work together, thus providing the capability to lift heavy objects, including the user, and to manipulate fine objects for many activities of daily living (e.g., eating, meal preparation) (**Figure 4)**. The base was designed from the ground up to include multiple articulations to

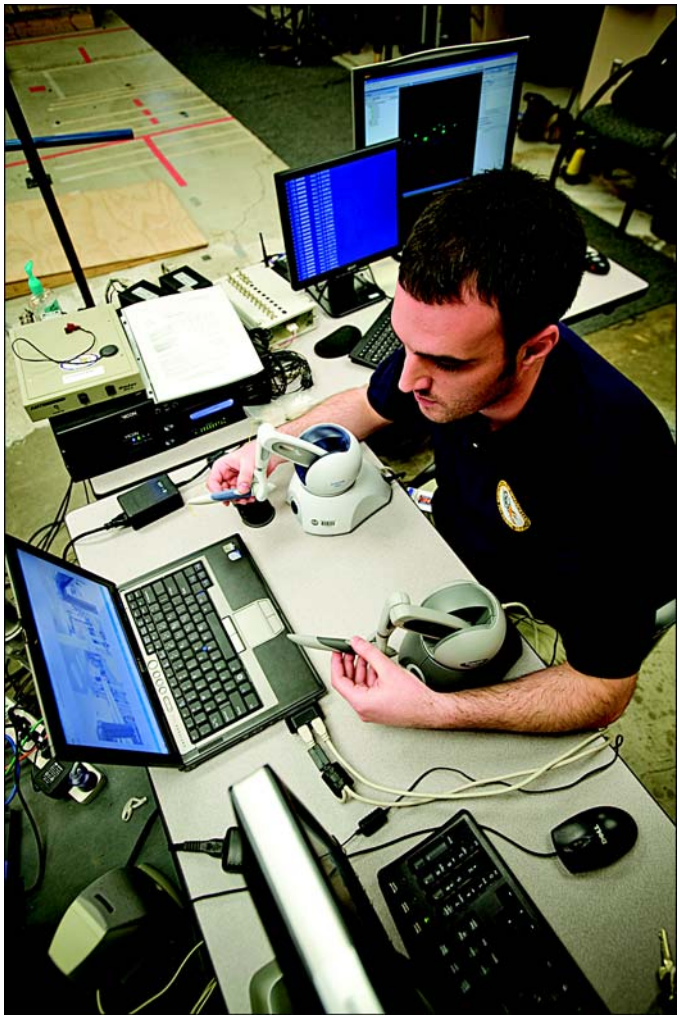

Figure 2.
Remote operator station for Personal Mobility and Manipulation Appliance.

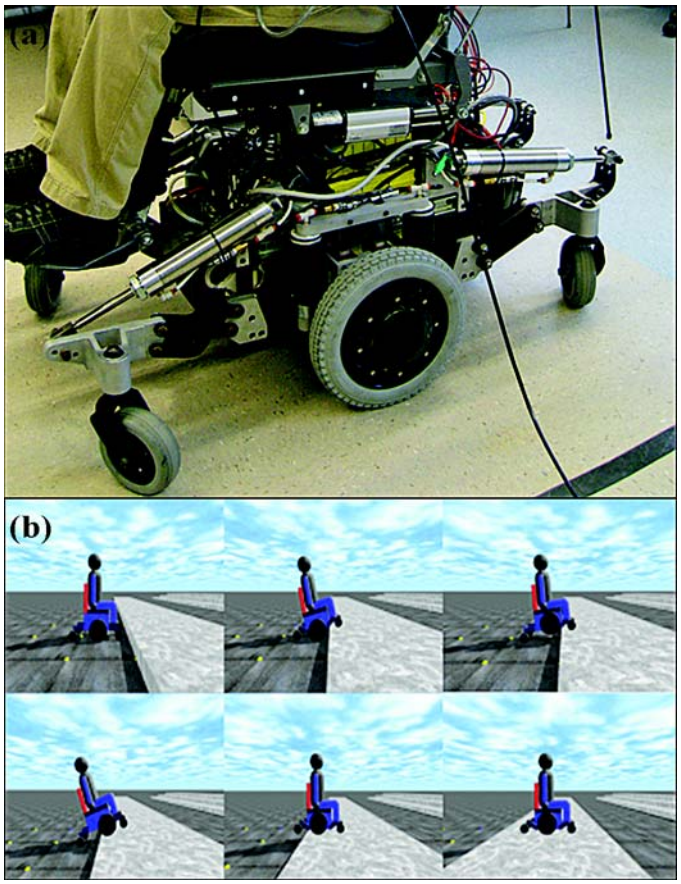

Figure 3.
(a) Personal Mobility and Manipulation Appliance (PerMMA) generation 2 base and **(b)** simulation of PerMMA climbing a curb.

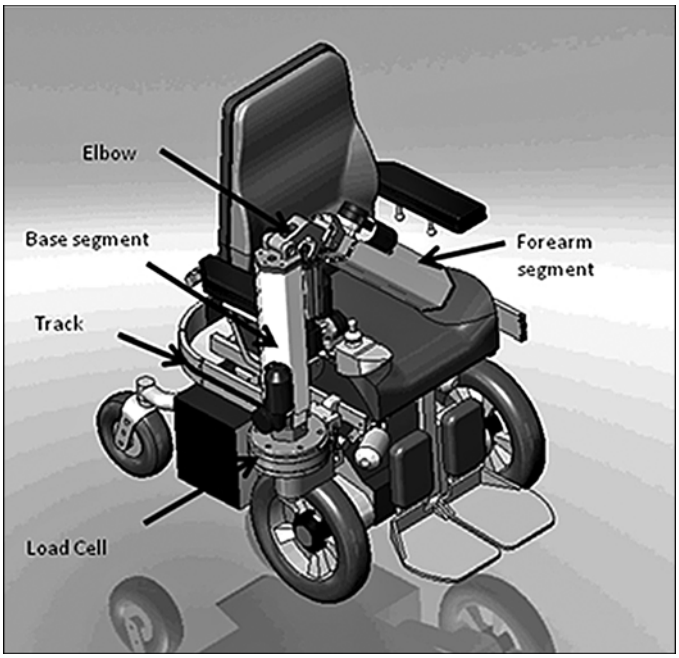

Figure 4.
Schematic for strong robotic arm.

address the goals of the consumers on the design team. All of the design required extensive modeling, computer-aided design, and advanced manufacturing. Prototypes of the PerMMA co-robot systems are being evaluated by clinicians and consumers to provide direction for future research, while faculty and students in the Carnegie Mellon University business school are investigating business models.

The knowledge base about wheelchairs and their users is expanding, and it will need to continue to grow into the next decade to address the questions that remain, especially as the most difficult problems persist. Some of the areas of inquiry that remain elusive are optimization of human wheelchair interfaces (both for manual and power wheelchair users), origins of wheelchair usage-related injury mechanisms (e.g., repetitive strain injuries, pressure ulcers, contractures, spasticity managements, postural control), practical co-robots in the natural environment, interaction of the wheelchair and the built environment (e.g., accessible pathways, transfer guidance, building design), sensing and control to expand independent and unrestricted power-wheelchair use, and effective training and assessment tools (e.g., virtual reality, clinical tools, computerized assessment, intelligent tutors, virtual coaches). Wheelchairs remain essential and viable platforms for safe and effective mobility as well as for performing activities of daily living and will continue to be for the foreseeable future; however, that should not discourage much needed progress and even the exploration of disruptive technologies.

Rory A. Cooper, PhD
Human Engineering Research Laboratories, Rehabilitation Research and Development Service, Department of Veterans Affairs, Pittsburgh, PA; Department of Rehabilitation Science & Technology, University of Pittsburgh, Pittsburgh, PA

Email: rcooper@pitt.edu

REFERENCES

1. Liu HY, Pearlman J, Cooper R, Hong EK, Wang H, Salatin B, Cooper RA. Evaluation of aluminum ultralight rigid wheelchairs versus other ultralight wheelchairs using ANSI/RESNA standards. J Rehabil Res Dev. 2010;47(5):441–55. [PMID: 20803388] http://dx.doi.org/10.1682/JRRD.2009.08.0137
2. McClure LA, Boninger ML, Oyster ML, Williams S, Houlihan B, Lieberman JA, Cooper RA. Wheelchair repairs, breakdown, and adverse consequences for people with traumatic spinal cord injury. Arch Phys Med Rehabil. 2009;90(12):2034–38. [PMID: 19969165] http://dx.doi.org/10.1016/j.apmr.2009.07.020
3. Riggins MS, Kankipati P, Oyster ML, Cooper RA, Boninger ML. The relationship between quality of life and change in mobility 1 year postinjury in individuals with spinal cord injury. Arch Phys Med Rehabil. 2011;92(7):1027–33. [PMID: 21704781] http://dx.doi.org/10.1016/j.apmr.2011.02.010
4. Wright S. Memorandum report: “Miscoded claims for power wheelchairs in the Medicare program.” Washington (DC): Office of the Inspector General, Department of Health and Human Services; 2009 Jul 13. 15 p. Report No.: OEI-04-07-0043.
5. Grindle GG, Wang H, Salatin BA, Vazquez JJ, Cooper RA. Design and development of the Personal Mobility and Manipulation Appliance. Assist Technol. 2011;23(2):81–92. http://dx.doi.org/10.1080/10400435.2011.567374

This article and any supplementary material should be cited as follows:
Cooper RA. Guest Editorial: Wheelchair research progress, perspectives, and transformation. J Rehabil Res Dev. 2012; 49(1):1–6.
http://dx.doi.org/10.1682/JRRD.2011.10.0199