A KNEELESS LEG PROTHESIS FOR THE ELDERLY AMPUTEE, ADVANCED VERSION

Dr. Rahamin Seliktar [a]

Sen. Lecturer in Mechanics
Technion, Israel Institute of Technology
Haifa, Israel

Professor R.M. Kenedi

Head, BioEngineering Unit
University of Strathclyde
Wolfson Centre
Glasgow, Scotland

ABSTRACT

The work described in this paper is part of a development and evaluation program, the aim of which was to bring a telescopic kneeless leg prosthesis to a reliable, commercially viable, and easily manufacturable stage. It is considered that these aims have been almost achieved, as the prosthesis appears to improve the gait characteristics significantly, compared with its first prototypes and compared with the conventional National Health Service (N.H.S.) above-knee prostheses.

The clinical evaluation was carried out with three patients and its results were found satisfactory. The specific advantages of this prosthesis compared with the conventional prostheses are: improved proprioception and stability, and improvements of certain kinematic characteristics. The paper describes briefly the modified version of the prosthesis and the investigations undertaken, and also discusses the results obtained.

Notation

$\overline{a_o}$, $\overline{a_k}$, $\overline{a_h}$ absolute acceleration of the origin, the knee, and the hip respectively.

---

[a]The research was conducted in the BioEngineering Unit, University of Strathclyde, and R. Seliktar at the time held a Senior Research Fellowship in the unit.

$\overline{a}_{Gs}$, $\overline{a}_{Gt}$ absolute accelerations of the center of gravity of the shank and thigh.

F_1, F_2, F_3 ground reaction force components in the x, y, and z directions.

F_{ki}, F_{hi} force components at the knee and hip joints.

ΣF_s, ΣF_T sum of external forces acting on the shank and thigh.

f_1 a factor which, when multiplied by ℓ_1, gives the distance of the c.g. of the foot-shank to the knee.

f_2 a factor which, when multiplied by ℓ_2, gives the distance of the c.g. of the thigh to the hip joint.

g gravitational acceleration.

$\overline{h} = [h]$ vector of the moment of momentum.

$\dot{\overline{h}}$ relative time derivative of the moment of momentum.

[I] tensor of moments and products of inertia.

$\dot{I}, \dot{\lambda}, \dot{x}, \dot{y}, \dot{z}$, $\ddot{x}, \ddot{y}, \ddot{z}$ first and second derivatives by time.

ℓ_1, ℓ_2 length of shank-foot and thigh respectively.

M mass.

M_1, M_2, M_3 moments measured by the force plate (about its center).

M_{ki}, M_{hi} x, y, z components of moments at the knee and hip.

$\overline{r}$ radius vector.

$\overline{r}_{Go}$ a vector from point o to G.

$\overline{T}_k$ sum of moments about the knee.

$\overline{T}_h$ sum of moments about the hip.

t	time.
x_a, y_a, z_a	coordinates of the ankle.
x_k, y_k, z_k	coordinates of the knee.
x_h, y_h, z_h	coordinates of the hip.
$\bar{V}$	velocity.
$\bar{V}_o$	velocity of origin.
W_s, W_T	weight of the shank and thigh respectively.
$\bar{\lambda} = [\lambda]$	absolute angular velocity.
$\bar{\omega}$	angular velocity of the coordinate system.

INTRODUCTION

Until the middle of the present century, the most common leg amputations were those which followed a traumatic incident such as war injuries. Recent developments have made amputation a lifesaving technique in severe cases of peripheral vascular disease. At present, trauma accounts for approximately 10 percent of all amputations in Western countries. The remaining 90 percent are mainly amputations for ischemia with a mean patient age over 55 years. In the majority of cases in this second group the other leg is affected as well as the entire arterial system and patients are in a general state of poor health. It is therefore essential to adapt or develop prosthetic systems for this large group of geriatric amputees. The basic requirements for such systems should be:

1. Increased stability during gait.
2. Reduced energy requirements for propulsion.
3. Improved proprioceptive feedback.
4. Reasonable reproduction of the kinematic features of normal gait.
5. Extremely gentle force transmission to the residual joints and pressure transmission at the socket-stump interface.

The knee joint is one of the major obstacles in the achievement of the above features. It breaks the proprioceptive chain of information, reduces stability, and causes increased energy consumption due to over compensating moments (for knee stability) applied by the hip muscles. As a result, most elderly amputees lock their knee joint during gait so as to gain stability and proprioception, which increases even further their energy consumption.

It was reported previously that a prototype of a new telescopic above-knee prosthesis was produced and evaluated with one patient (5). This project was laterally supported by the Scottish Home and Health department with an orientation toward geriatric amputees. The prosthesis and its systems were redesigned and the new prototype was evaluated on three patients.

THE KNEELESS CONCEPT

Since the underlying concept of the prosthesis has been reported previously (4) only a short description of the prosthesis and its system follows.

It can be shown that the normal functional relationship between the foot and hip joint can be obtained by a straight leg with a telescopic function. To achieve proper function, i.e., the relative position between the thigh and the foot, and to prevent hyperextension of the hip joint it is necessary to allow restrained relative movement of the stump (socket) in relation to the prosthesis. This concept was executed by employing a telescopic self-energizing system which adjusted to the proper leg length during the walking cycle and which incorporated a restrained socket-to-leg articulation at the vicinity of the hip.

The results of this arrangement were:

1. Good stability, since no hip moments were required for knee stabilization.
2. Improved proprioception, since the prosthesis was almost rigidly (without free articulation) propelled by the stump.
3. Moderate force transmission across the stump-socket interface due to the linear flexibility of the prosthesis and reduced interface pressure on the front of the stump at the double support stage.
4. As a result of "1" the energy expenditure was expected to be reduced.
5. Cosmesis of the prosthesis was reduced but gait appearance was improved.

THE MECHANISMS OF THE LEG

The mechanical systems of the latest prototype were based in concept on the first design. Major changes, however, were made in the control system and in some of the mechanical components and their working conditions.

Figure 1 shows the general arrangement of the prosthesis and the following six major components: hydraulic control system; the foot with its toe switch; the self-energizing system; the knee lock; alignment device; and, the socket with its hinges, an elastic restraint, and a safety switch.

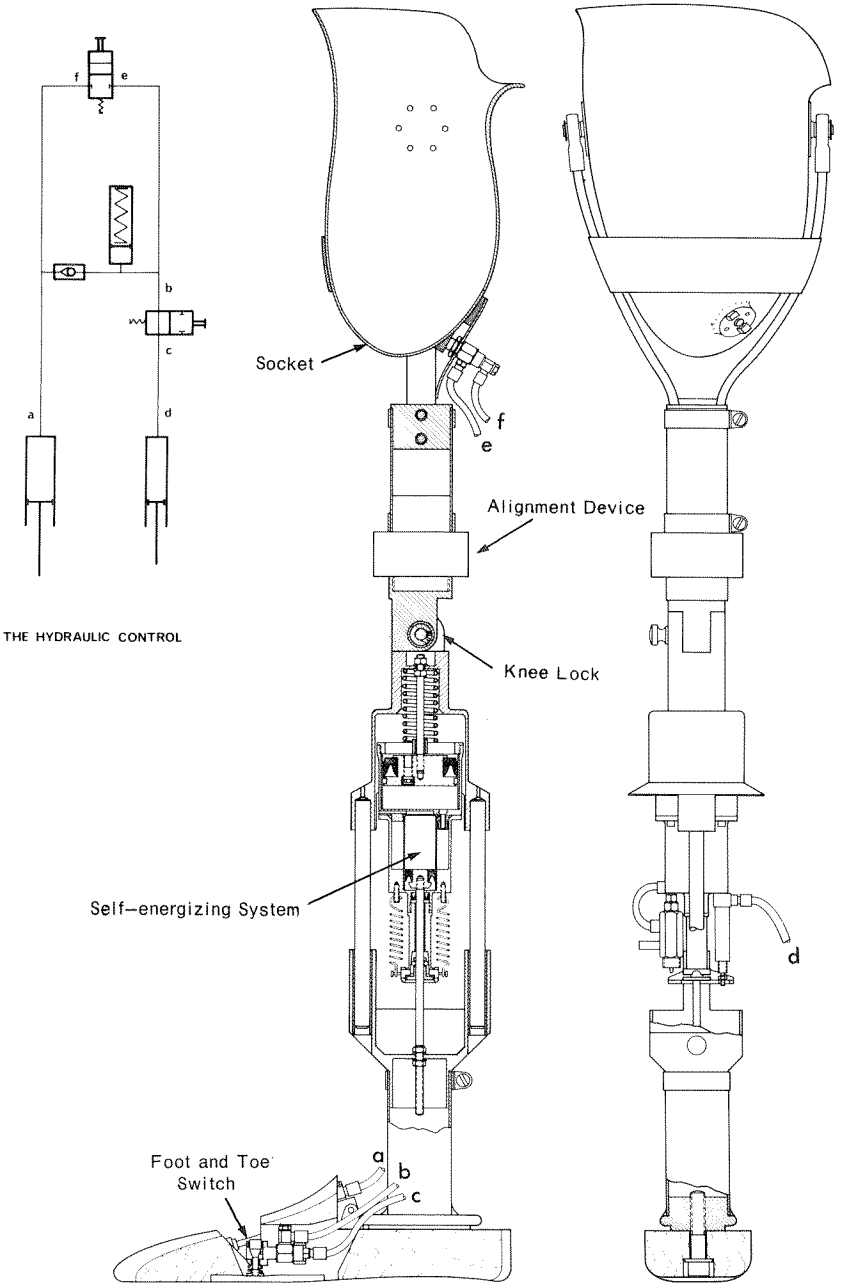

FIGURE 1. — Telescopic kneeless leg prosthesis.

The task of the hydraulic control system is to trigger the shortening action of the telescopic self-energized unit at toe-off.

To prevent false triggering of the unit, the control system, as illustrated, insures that no shortening can occur while the prosthesis is weight-bearing. The conditions for shortening of the prosthesis, as ascertained by the control system, are: the load on the prosthetic foot is reduced to zero, following flexion of the toe, while the socket is deflected from its resting position. The major task of the self-energizing (S.E.) system is to shorten the prosthesis and provide ground clearance during swing phase. This is perfectly achieved with the above conditions, since shortening occurs when the patient initiates swing by lifting his toe off the ground. The pneumatic S.E. system performs a compression during which energy is stored, and an expansion during which energy is expended to shorten the prosthesis. The compression stroke, which occurs during stance phase, is 13mm long, and the pressure in the system is built up to 2 kgf/cm^2. Strain gages were mounted on one experimental unit, and the pneumatic performance of the system was examined. Figure 2 describes the pressure buildup in the system during the first cycles of gait. It is evident that the process is asymptotic to 2kgf/cm^2 and it agrees with the design criteria, assuming adiabatic compression and expansion with $k = 1.2$, i.e., for any two states i and j, $P_i V_i^{\,k} = P_j V_j^{\,k}$. The value $k = 1.2$ was experimentally derived from the previous model. The energy storage capacity during the steady state, which equals the energy utilized after reaching the asymptotic value, was 18 kgf/cm. This value is about twice the amount required for shortening the prosthesis, a value of 0.981 Joules, 2.5 kgf resisting force, weight plus friction, along a 4cm stroke.

The operation sequence of the S.E. system follows:

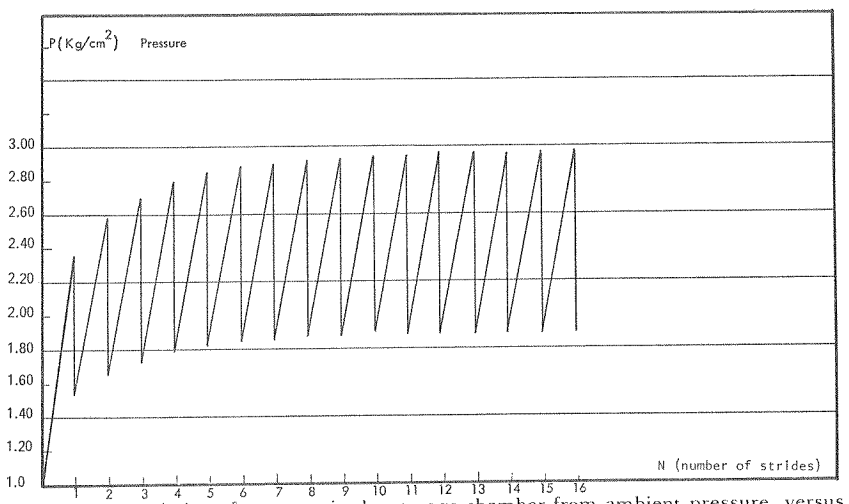

FIGURE 2.—Variation of pressure in the storage chamber from ambient pressure, versus number of strides.

1. *Compression* of air and energy storage during the stance phase, while the piston rod of the expansion cylinder is locked and its air inlet sealed;

2. *Shortening* of the prosthesis from the air expansion from the storage chamber into the expansion cylinder at toe/off while the piston rod lock is released; and

3. *Extension* of the prosthesis past midswing and air exhaustion from the expansion cylinder.

The reliability and efficiency of the pneumatic system were considerably increased by the new design. The previous toggle lock was replaced by a more reliable, tapered ball-bearing-friction lock (Fig. 3).

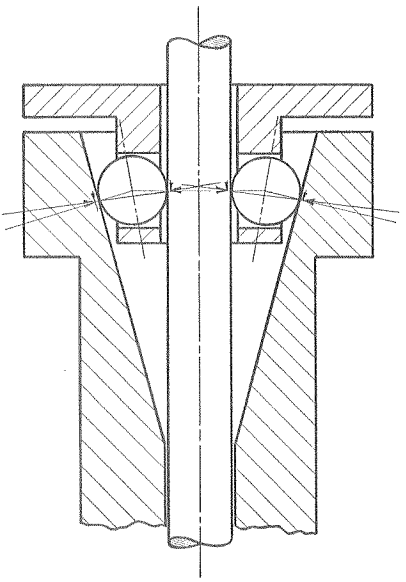

FIGURE 3.—Tapered ball-bearing-friction lock.

The knee joint, for sitting purposes only, is designed to be a compact roller bearing ratchet which allows flexion of the shank and locks in extension. The knee is easily unlocked by turning the roller cage backwards. For static and dynamic alignment, the United States Mfg. Company Alignment Coupling 2L 246-AC is used.

A quadrilateral, ischial weight-bearing, total-contact socket made of reinforced polyester resin was used. The socket is made with two spindles which articulate with two self-aligning Rose Bearings extending from the prosthesis. This provides the angular degree of freedom between the socket and the prosthesis and enables easy alignment of the socket. Flexion of the socket is restrained by an elastic strap.

All systems were tested and modified during the development period before clinical evaluation.

THE EVALUATION PROCEDURE

Patients

Three amputees were selected for evaluation of the third prototype of the telescopic prosthesis. Despite the fact that the prosthesis was primarily intended for use by geriatric amputees, it was evaluated on healthy subjects with traumatic amputations. This decision was made in order to assess the properties of the prosthetic mechanism without the introduction of other functional limitations that may be imposed by the state of health of the amputees. The subjects consisted of one World War II veteran and two accident traumas.

Equipment

Two Bolex H 16 movie cameras were used to photograph the patients in the sagittal and coronal planes. The walkway in the Biomechanics Laboratory, BioEngineering Unit of Strathclyde University, was used. This contains a force plate flush with the floor surface and of the same covering as the rest of the floor. The force plate consists of two base plates with four round, hollow-column-type strain gage loadcells. Values of the three components of force and moment about the center of the force plate were measured and recorded on a 25 channel U.V. recorder SE 2. 100, using B 100 type galvanometers.

Test Procedure

All the evaluations were carried out in the Biomechanics Laboratory and the subjects were not supplied, at this stage, with telescopic prostheses for use outside the laboratory. Each subject participated in several experiments. During the first visit, the prosthesis was fitted and final alignments made. A walkway test was then conducted, during which ground reaction forces were recorded and the patient was filmed in two orthogonal planes. It was found that after a number of trial runs (usually between three and ten), the subject walked naturally and was able to target on the force plate without having to make a conscious effort to do so. There was no "break-in" period for the subjects to become accustomed to the prosthesis, in addition to this.

The patients' joints were marked with high contrast markers and the dimensions of their limbs were measured. Also, the patients' weight and height were recorded.

Every experiment consisted of two series of runs, one with conventional N.H.S. (National Health Service) prosthesis and the other with the telescopic prosthesis. During every run, the patient was filmed with the coronal and sagittal plane cameras, and force and moment measurements were recorded.

After about ten to fifteen runs with the telescopic prosthesis, another five to ten runs were performed with the patient wearing his conventional prosthesis. The latter was also marked in the same fashion as the normal leg. In the various tests the order of use of the conventional and telescopic prostheses was changed so that the fatigue factor was randomly balanced between gait studies with the conventional and telescopic artificial limbs.

Every experiment lasted about 2 hours, and during this period some change in the quality of the amputees' performance was evident. At first, performance improved after a short period of experience, but after a prolonged period of use fatigue was noticeable.

At the end of the experiment a short discussion took place with each subject to obtain his subjective opinion on his performance with the prosthesis. In addition, attention was paid to the patient's behavior, particularly while changing his prosthesis. The patient's adaptation to one type after a period of use with another type of prosthesis also was particularly interesting to observe.

RESULTS AND INTERPRETATION

The objective of the experiments was to obtain data on the performances of the prosthetic systems and the gait of the amputee. Since comparative analysis to statistically normal gait was considered of little value, the gait characteristics with the telescopic prosthesis were compared to the ones obtained with the conventional prosthesis. Naturally, symmetrical performance of the prosthesis and the normal leg is one of the major targets. The results were therefore in three categories: kinematic results on the performance of the S.E. system, kinematics of locomotion (displacement analysis of the hip joint), and force plate records.

The most important kinetic information was the vertical displacement pattern of the hip joint, the relative displacement of the socket to the prosthesis, the prosthesis length, and the forces transmitted by the prosthesis to the trunk. The amount of information recorded, however, was more extensive than that listed above and corresponded to the following markings: the joints and toes of the normal leg, the hinge, bottom of the socket, each of the two bases of the S.E. system, and the toe of the telescopic prosthesis (Fig. 4).

The films and the force plate records were analyzed and data on displacement and forces were extracted. The displacement and force data were processed by using a free body model of the leg segments. The objective was to obtain information on the effect of the inertia forces and moments on the forces and moments transmitted by the joints. Unfortunately, because of small inaccuracies in the film analysis, the second derivative of the displacement vs. time function was even further distorted. Since it was found that the effect of the inertia forces and moments compared to ground reaction forces and the weight contribute very little to the total forces and moments at the joints (3,5), it was

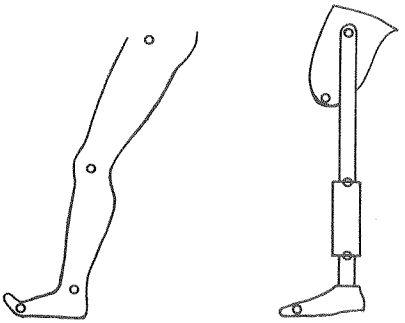

FIGURE 4.—Positions of the markers on the normal leg and the telescopic prosthesis.

decided that these results were not suitable for presentation here. A generalized analysis of dynamics, including inertial effects, is described in the appendix.

As previously mentioned, some mechanical tests were conducted to confirm the design characteristics of individual components. However, no full scale fatigue test has been carried out on the prosthesis as a whole at this stage. It has been suggested that a cyclic test of at least one million cycles should be performed before releasing the prosthesis for patient use.

Mechanically, the systems appeared to function as anticipated. The amount of energy recycled by the self-energizing unit was adequate, with a little excess to overcome unexpected increases in friction and increased radial acceleration of the prosthesis.

The control system functioned extremely well. Figure 5 describes the

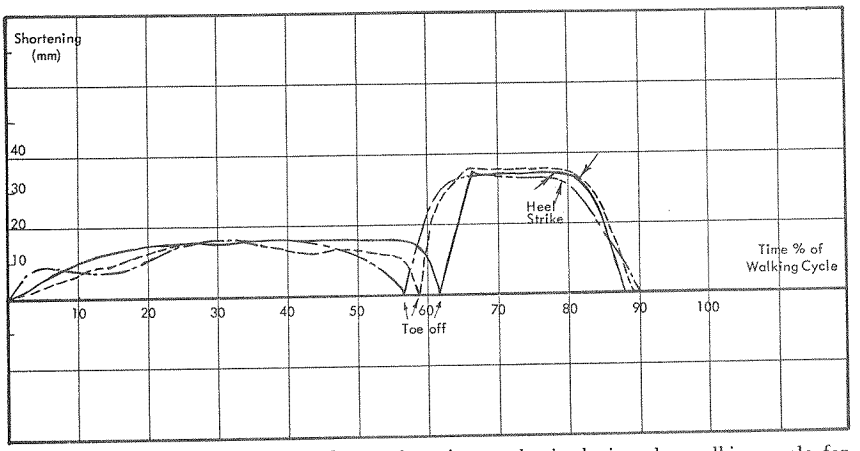

FIGURE 5.—Variation in length of the telecopic prosthesis during the walking cycle for three patients.

variation in the length of the prosthesis for the three patients during the complete gait cycle. The curves are typical of all experiments. Toe-off is independent of the system and occurs when the patient initiates it. Extention begins slightly past midswing.

The socket-prosthesis angular control was also adequate. A typical angular displacement curve is shown in Figure 6. Here there is a slight change from the original intention. The angle between the socket and prosthesis does not increase until the double support stage. In the first prototype, there was a slight increase followed by a decrease in this angle prior to midstance, which is a more accurate reproduction of the normal relationship. The simplicity of the new system, however, justifies this minor compromise. Comparison of the vertical displacements of the hip joints of the two prostheses and the normal leg of all three subjects is plotted in Figures 7,8, and 9. It can be seen from Figure 8 that there is a considerable improvement between the first and the latest prototype. The latest prototype is now closer to the performance of the normal leg. The slight "sinking" movement following heel strike, which is normally obtained by the plantar flexion of the ankle joint, is also obtained with the telescopic leg as a result of the compression of the self-energizing unit.

In normal locomotion, following this slight "sinking," an elevation of the hip joint takes place until midstance when the hip level is similar to that of the standing position. This varies among individuals, as some tend

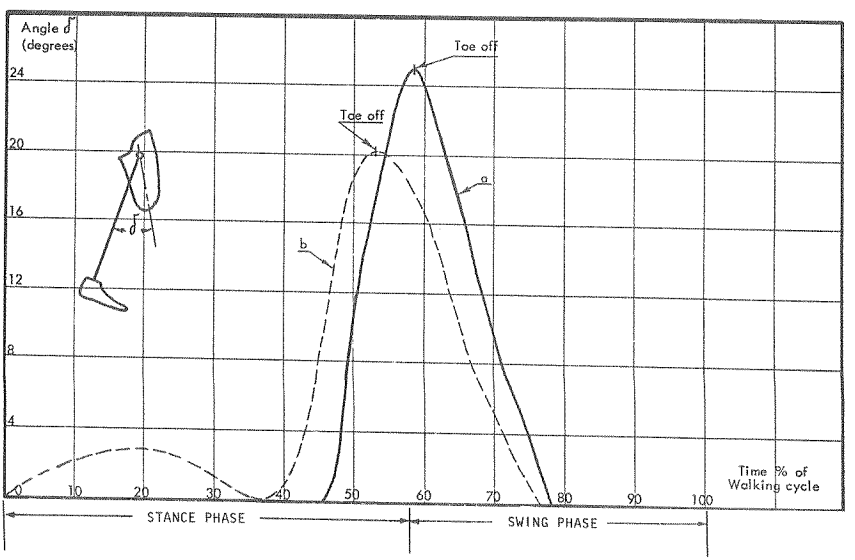

FIGURE 6.—Socket-Prosthesis relative angular displacement; a. prototype II.b.prototype I.

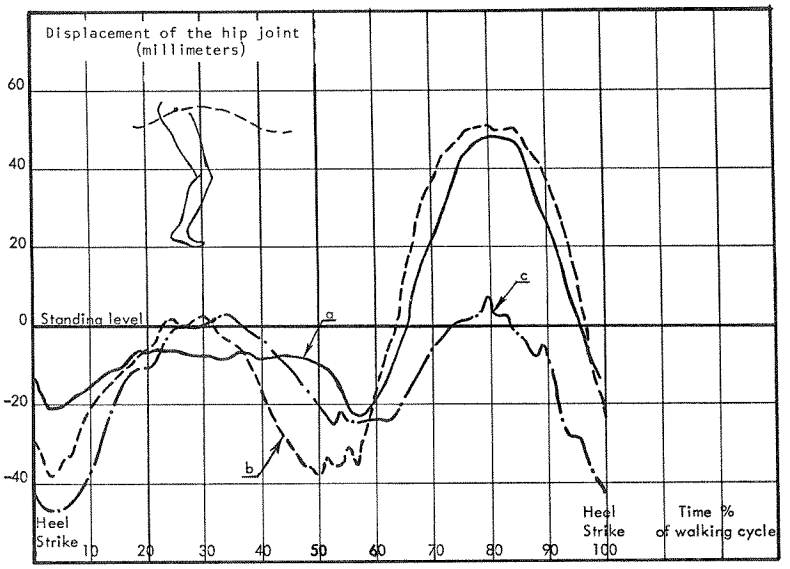

FIGURE 7.—Vertical displacement of the hip joint (Patient 1): a. hinge of telescopic prothesis; b. hip joint of conventional prosthesis; c. hip joint of normal leg.

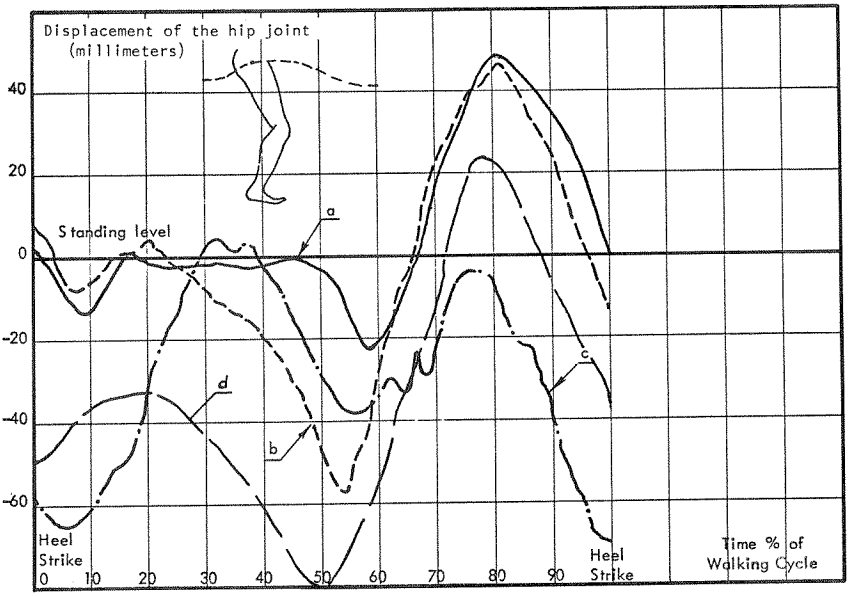

FIGURE 8.—Vertical displacement of the hip joint (Patient 2): a. hinge of telescopic prosthesis; b. hip joint of conventional prothesis; c. hip joint of normal leg; d. hinge of telescopic prosthesis prototype I.

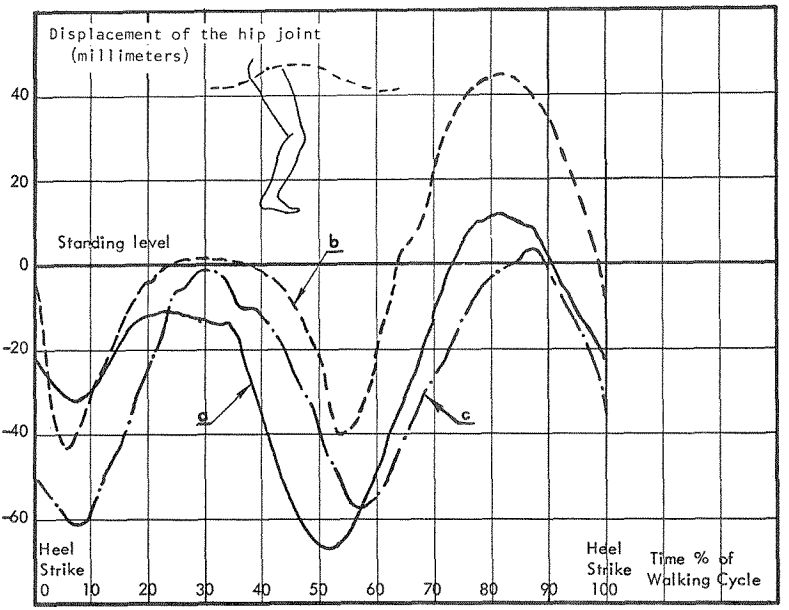

FIGURE 9.—Vertical displacement of the hip joint (Patient 3): a. hinge of the telescopic prosthesis; b. hip joint of the conventional prosthesis; c. hip joint of the normal leg.

to fully extend the knee at midstance, while others flex it slightly, and still others plantar flex the foot with the knee extended prior to midstance. This individual characteristic causes either elevation of the hip above the standing position or lowering it below the standing position. With the second prototype of the telescopic prosthesis, the hinge at midstance is lower than in the standing position because under full load the prosthesis is compressed approximately 13mm[b] The effect of this feature is slightly abnormal although minor. The amputees tested were not aware of this at all.

With the first prototype this feature was more pronounced. The total compression then was 35mm and therefore produced (instead of a sinusoidal curve of displacement) a very slight elevation of the hinge following heel strike and a continuous sinking until the double support phase. Because of this fact there was also a significant difference between the level of the hinge at midstance and the level of the hinge at mid-swing. With the second prototype this is considerably improved although it still remains somewhat different from normal. However, as shown in Figures 7,8, and 9 of displacement of the hinge, the telescopic prosthesis is an improvement over the conventional prosthesis. This improvement was

[b]The total compressing force (weight) required in order to achieve full stroke of 13mm is 58kg (pneumatic compression + spring). The system is adjustable for lighter patients and also a "softer" spring can be used.

evident even from simple observation. The amputees' performance was demonstrated to objective observers while sequentially wearing both types of prostheses, and all observers commented on the improved kinematics (reduced limping) with the telescopic prosthesis. This was particularly evident at mid-swing of the prosthesis.

Some amputees tend to compensate for the lack of proprioceptive information from the prosthesis by elevating their hip joint (on the side of the prosthesis) during the prosthetic swing phase. This is one of the reasons for the appearance of limping or excessive lateral trunk displacement and is performed despite the fact that a conventional prosthesis, unlike a peg leg, allows for adequate ground clearance during knee flexion. The same feature was observed with the telescopic prosthesis but in a less severe form. The change in vertical length of the telescoping prosthesis at the double support phase and mid-swing is less than while wearing the conventional leg. This can particularly be seen in Figure 8 where the change in vertical length of the telescopic prosthesis is an improvement over the conventional leg. This improvement is of considerable interest. One would expect that with a freely swinging shank the amputee would be less concerned about ground clearance as the prosthetic knee flexes during the swing phase preventing a collision between the prosthetic foot and the ground. It seems, however, that the angular proprioception provided by the telescopic prosthesis is much more important to the amputee than the knowledge that the ground clearance is provided by knee flexion. This may be explained by the fact that any tangential collision or even slight contact between the foot of the telescopic prosthesis and the ground is transmitted directly to the amputee. The knowledge of the position of the foot at this state, which is provided by the telescopic prosthesis, enables the taking of immediate corrective action by the amputee without stumbling and thus considerably increases his sense of security.

It should be emphasized that these characteristics were obtained after only a few minutes of training with the telescopic prosthesis. It is believed that after a prolonged period of use of such a prosthesis, the amputee will learn even a greater appreciation for the ground clearance provided by the telescopic shortening and will thus correspondingly improve his gait significantly.

Another feature observed with both conventional and telescopic prostheses, was the tendency to "overshoot" heel strike. With the conventional prosthesis this can be explained by the lack of proprioceptive feedback from the prosthetic knee. The amputee waits for the slight impact of the swinging shank with the extention stop to indicate the fully extended position of the knee. Only then does he initiate heel contact with the ground by reversing the direction of angular rotation of the prosthesis and

begin transferring his weight to the prosthesis. This gait deviation is less pronounced with the telescopic prosthesis, but it still existed especially with patient No. 1. It appears likely that this is a carryover of an old established habit to a new situation, as at heel strike there is a total proprioceptive knowledge of the position of the telescopic prosthesis, and thus the need to overshoot does not exist.

One of the observations which proved the proprioceptive advantages of the telescopic prosthesis was outstandingly simple. The change from the conventional prosthesis to the telescopic prosthesis seemed perfectly natural to the subjects. They were able to use it immediately without any difficulty even when wearing it for the first time. However, the reaction of all four subjects (including the wearer of the first prototype), when changing from the telescopic to the conventional prostheses, was to increase friction in their knee mechanism by manipulating the adjustment screw. Their comments on this action, as nothing was explained to them about proprioception, was that they could not "feel" the shank of their conventional prostheses and were thus in a state of confusion.

This was one of the most encouraging features, as one would not expect an amputee to appreciate this difference between the two prostheses in such a short period of time. It was also very surprising to discover how easily the amputees' habitual patterns with their conventional prostheses were upset while they found it so easy to adapt themselves to the telescopic prostheses.

Ground reaction forces are rather difficult to interpret. The actual traces are obtained by a straightforward method of force plate measurement. However, the significance of their resemblance to the ones obtained from normal individuals or from the amputee's normal leg, is rather uncertain. This doubt applies mainly to the vertical forces. It is believed that the fore and aft shear forces should be similar to the normal to provide the characteristics (accelerations in particular) of normal propulsion.

The vertical ground reaction forces obtained from the telescopic prosthesis differed from the ones obtained from the normal leg. The force traces for all three amputees are shown in Figures 10, 11, and 12. The main difference between the force curves for the prosthetic and normal legs is that the force development takes longer to build up in the telescopic prosthesis. As a result of this slow force development, some dynamic effects are lost. The more obvious ones are the disappearance of the usual two peaks at heel strike and before toe-off. This is due to the reduced vertical acceleration and consequently reduced vertical deceleration and is evident from the relatively small valley (in the curve) at midstance. The curve, therefore, appears smoother than in the normal leg and the vertical movement on the prosthesis is less jerky. As stated

previously, it is not clear whether this is or is not an advantageous characteristic for the telescopic prosthesis. Some of the amputees were enthusiastic about this "shock absorbing" feature produced by the compressibility of the telescopic prosthesis.

This feature was rather inconvenient in the first prototype where the

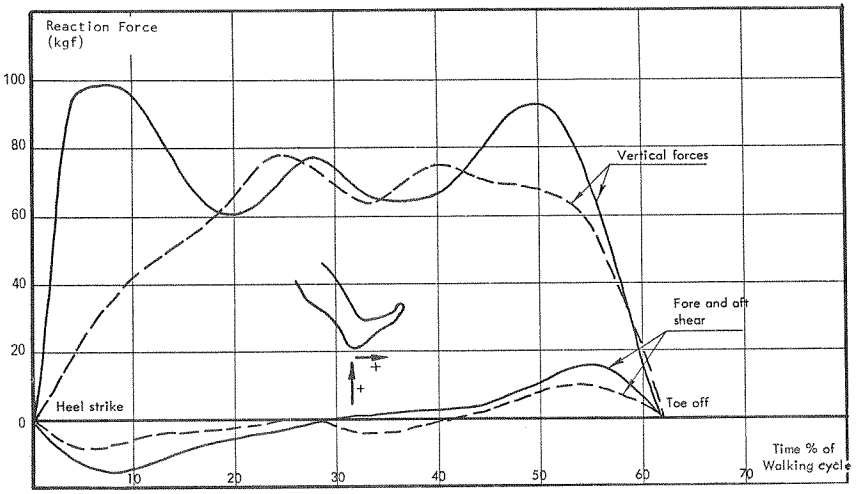

FIGURE 10. — Ground Reaction Forces (Patient 1). The interrupted lines represent forces on telescopic prothesis; solid lines represent forces on normal leg.

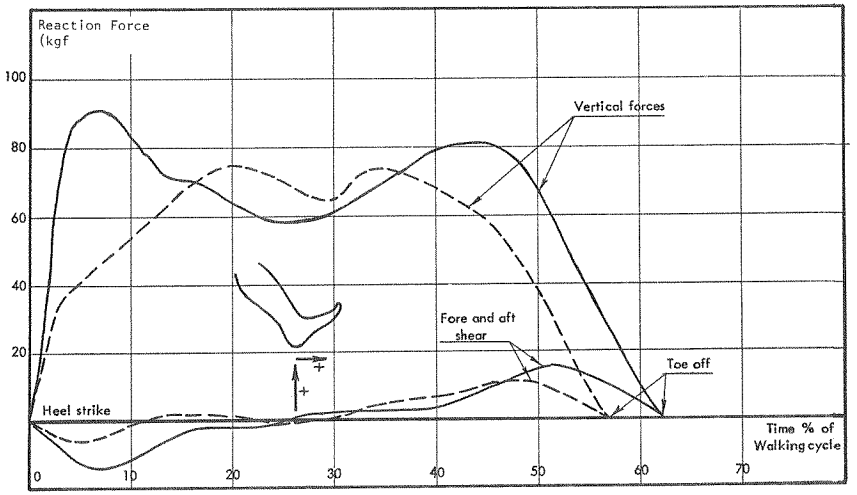

FIGURE 11. — Ground Reaction Forces (Patient 2). The interrupted lines represent forces on telescopic prosthesis; solid lines represent forces on normal leg.

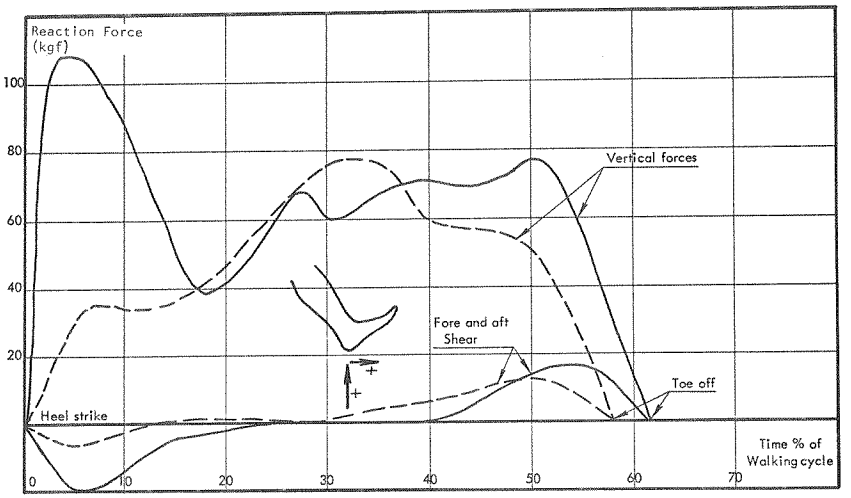

FIGURE 12. — Ground Reaction Forces (Patient 3). The interrupted lines represent forces on telescopic prosthesis; solid lines represent forces on normal leg.

prosthesis appeared to be too "soft" during a rather long portion of the walking cycle. Proceeding on the amputee's comments, the prosthesis was "stiffened" by altering its combined spring and pneumatic characteristics and by reducing the compression stroke to one-third of its initial value (5). This eliminated the superficial feeling of "floating in water filled boots," and produced a more desirable force transmission at the socket-stump interface.

The fore and aft shear forces for the telescopic prosthesis were fairly low compared to the normal leg, although they exhibited similar characteristics. The expected decelerating shear force during the first half of stance phase was on the low side (presumably because the amputee overcompensated by applying a hip extension moment to stabilize a nonexisting knee). During the second half of stance phase the shear forces are reversed towards propulsion, and appear closer to normal, although still somewhat lower in magnitude. In general there is not much difference between the character of the fore and aft shear forces while wearing the telescopic and conventional prostheses. It is well to note that the fore and aft shear forces are more of a voluntary force as opposed to the vertical ground reaction or supporting force. The amputee controls by these forces (fore and aft shear) the degree of restraint and propulsion produced by his hip muscles. It is therefore unlikely that he will change his habitual gait patterns even with different prostheses. To investigate this phenomenon objectively a much longer period of use of the telescopic prosthesis is required.

CONCLUSIONS

The second prototype of the telescopic prosthesis proved mechanically reliable. The efficiency of the system of the first prototype was significantly increased and cosmetic disadvantages were reduced. Cosmesis of the foot and shank created very little problem, but the one cosmetic disadvantage, the relative socket-prosthesis displacement, remains as before. This requires the use of flexible cosmetic covers. A suggestion for further research on this subject is to replace the socket hinge system by a fixed flexible suspension, such as use of steel or Fiberglas rods to produce the relative displacement.

The kinematics of gait, although improved in comparison with the previous prototype and compared with that of the conventional prosthesis, is still not close enough to normal gait nor is it symmetrical with the normal leg. Improvement of proprioceptive feedback was evident and very significant and increased the confidence of the amputee.

Reaction forces were rather different from those of the normal leg; however, it is expected that optimization will be obtained with proper training.

The amputees' comments and performances were most satisfactory, and their immediate acceptance and ease of adaptation to the telescopic prosthesis is perhaps one of the major favorable features.

ACKNOWLEDGMENT

The work described was a development project sponsored by the Scottish Home and Health Department and was carried out at the BioEngineering Unit, University of Strathclyde, Glasgow.

REFERENCES

1. Bresler, B. and J.P. Frankel: The Forces and Moments in the Leg During Level Walking. Transactions of the ASME, Jan. 1950.
2. Drillis, R., R. Contini, and M. Bluestein: Body Segments Parameters, A Survey of Measurement Techniques. Artif. Limbs, 8(1), Spring 1964.
3. Paul, J.P.: Forces at the Human Hip Joint. A thesis submitted for the Degree of Ph. D. of University of Glasgow, 1967.
4. Seliktar, R.: Self Energized system for Above Knee Prostheses. J. Biomechanics, 4:431-435, 1971.
5. Seliktar, R.: Telescopic Artificial Leg. A thesis submitted for degree of Ph. D. University of Strathclyde, Glasgow, 1971.

APPENDIX

DYNAMIC ANALYSIS OF GAIT

The human body consists of a large number of supporting elements linked together either in a form of articulations or more rigid connections. The soft tissues form a non-homogeneous distribution of mass and to a certain extent this distribution can be variable.

A precise dynamic analysis of movements of the body would require its consideration as a system of particles. For obvious reasons that kind of analysis is virtually impossible. However, it would be acceptably accurate to divide the body into a limited number of rigid segments and analyze each of them as a free body.

A complete dynamic analysis of the body segments is not possible as long as the restraints at the joints are not known. Therefore, in locomotion studies, it is accepted to determine the forces at the joints and muscles from the velocities and accelerations of the respective body segments and the external forces acting on them.

If a complete analysis of all the body segments is made, the external forces need not be known. However, if the external forces can be measured, then analysis of the leg segments can be carried out independently of an analysis of the torso segment.

Even when dealing with this simplified form, certain difficulties exist. Measurement of mass and products of inertia in vivo is not feasible; therefore, estimated values must be used. Moments of inertia can be assessed only about certain reference axes (2).

It should be pointed out that ground reaction forces are measured by a fixed force plate dynamometer and the position of the center of pressure of the foot is not known. It is obtainable, however, from the set of moments M_x, M_y, which are the moments of the stance forces about the center of the force plate (Fig. 13). Analysis of each segment of the leg as a free body results in the following:

Moment about the knee joint[c]

$$\left.\begin{aligned}\overline{T}k = {} & [Mx + Mk_1 - F_3Yk + F_2Zk + (Yk - Ya)f_1Ws]\overline{i} + \\ & + [My + Mk_2 - F_1Zk + F_3Xk - (Xk - Xa)f_1Ws]\overline{j} + \\ & + [Mz + Mk_3 - F_2Xk + F_1Yk]\overline{K}\end{aligned}\right\} \qquad [1]$$

[c]The expression $(Yk - Ya)\ f_1.W_s$ is related to the moment produced by the weight of the shank, and the expressions $(Yk-Ya)f_1$ and $(Xk-Xa)f_1$ indicate the X and Y coordinates of the center of gravity. These expressions correspond to the fact that the line of action of the weight of the shank passes through its center of gravity.

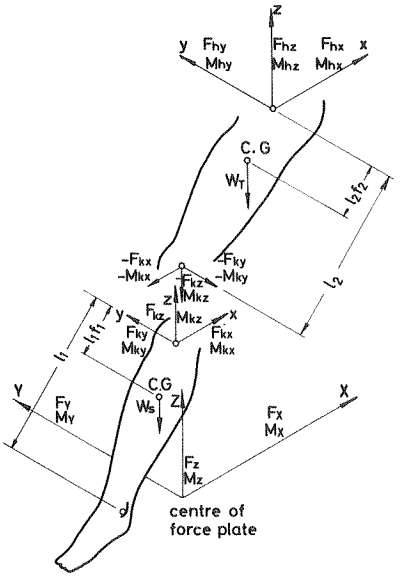

FIGURE 13.—Free Body diagrams for dynamic analysis using leg segment parameters.

Resultant force acting on the shank —

$$\Sigma \overline{F}_S = (F_1 + F_{k1})\overline{i} + (F_2 + F_{k2})\overline{j} + (F_3 + F_{k3} - W_S)\overline{K} \qquad [2]$$

Moment about the hip joint —

$$\left.\begin{aligned}\overline{T}_h = {} & [M_{h1} - M_{k1} - F_{k2}(Z_h - Z_k) + F_{k3}(Y_h - Y_k) + (Y_h - Y_k)f_2 W_T]\overline{i} + \\ & + [M_{h2} - M_{k2} + F_{k1}(Z_h - Z_k) - F_{k3}(X_h - X_k) - (X_h - X_k)f_2 W_T]\overline{j} + \\ & + [M_{h3} - M_{k3} - F_{k1}(Y_h - Y_k) + F_{k2}(X_h - X_k)]\overline{K}\end{aligned}\right\} \qquad [3]$$

Resultant force acting on the thigh —

$$\Sigma \overline{F}_T = (F_{h1} - F_{k1})\overline{i} + (F_{h2} - F_2)\overline{j} + (F_{h3} - F_{k3} - W_T)\overline{K} \qquad [4]$$

where the hip, knee, and ankle coordinates are obtained from the films and the coordinates of the centers of gravity of the thigh and shank are calculated by the use of proportionality factors f_1 and f_2 (see Fig. 13). The equations of motion of each body segment can be derived from Newton's second law and Euler's equations of motion for a rigid body.

$$\overline{T} = \frac{dh}{dt} + (\overline{r}_{Go} \times M\overline{a}_o) \qquad [5]$$

The relative angular momentum, $\overline{h}$, is:

$$[h] = [I]\,[\lambda] \qquad [6]$$

where $[\lambda]$ is a vector, describing the absolute angular velocities of the segment and $[I]$ is the matrix of the moment of inertia, assumed to be symmetric, defined by:

$$[I] = \begin{bmatrix} I_{11} & -I_{12} & -I_{13} \\ -I_{12} & I_{22} & -I_{23} \\ -I_{13} & -I_{23} & I_{33} \end{bmatrix} \qquad [7]$$

Since the coordinate systems attached to the hip and knee joints are performing only translation with the joints while the leg segments may rotate relative to their respective coordinate systems, the angular velocity of the coordinate systems $\bar{\omega}$ about the inertial frame is zero. The value

$$\frac{d\bar{h}}{dt} = \dot{\bar{h}} + \bar{\omega}\,\bar{h}$$

is thus reduced to

$$\frac{d\bar{h}}{dt} = \dot{\bar{h}} \qquad [8]$$

This value includes derivatives of the moments of inertia as well as those of the angular velocities.

$$\begin{aligned} \frac{d\bar{h}}{dt} = {} & (\dot{I}_{11}\lambda_1 - \dot{I}_{12}\lambda_2 - \dot{I}_{13}\lambda_3 + I_{11}\dot{\lambda}_1 - I_{12}\dot{\lambda}_2 - I_{13}\dot{\lambda}_3)\bar{i} + \\ & + (-\dot{I}_{12}\lambda_1 + \dot{I}_{22}\lambda_2 - \dot{I}_{23}\lambda_3 - I_{12}\dot{\lambda}_1 + I_{22}\dot{\lambda}_2 - I_{23}\dot{\lambda}_3)\bar{j} + \\ & + (-\dot{I}_{13}\lambda_1 - \dot{I}_{23}\lambda_2 + \dot{I}_{33}\lambda_3 - I_{13}\dot{\lambda}_1 - I_{23}\dot{\lambda}_2 + I_{33}\dot{\lambda}_3)\bar{K} \end{aligned} \qquad [9]$$

In the specific case of the thigh and shank-foot, the equations of motion are:

$$\bar{T}_k = \frac{d\bar{h}_k}{dt} + (\bar{r}_{Gk} \times M\bar{a}_k) \qquad [10]$$

$$\Sigma\bar{F}_s = M_s\bar{a}_{Gs} \qquad [11]$$

$$\bar{T}_h = \frac{d\bar{h}_h}{dt} + (\bar{r}_{Gh} \times M\bar{a}_h) \qquad [12]$$

$$\Sigma\bar{F}_T = M_T\bar{a}_{GT} \qquad [13]$$

After substituting the values for $\bar{r}_G$ and $\bar{a}$ as given in Figure 13 and substituting the quantities for T and F derived in equations 1,2,3, and 4, we have:

$$\begin{aligned} M_{k1} = {} & \dot{I}_{s11}\lambda_{s1} - \dot{I}_{s12}\lambda_{s2} - \dot{I}_{s13}\lambda_{s3} + I_{s11}\dot{\lambda}_{s1} - I_{s12}\dot{\lambda}_{s2} - I_{s13}\dot{\lambda}_{s3} + \\ & + \frac{W_s}{g} f_1[\ddot{Z}_k(Y_a - Y_k) - \ddot{Y}_k(Z_a - Z_k)] - M_x + F_3Y_k - F_2Z_k - f_1W_s(Y_k - Y_a) \end{aligned} \qquad [14]$$

$$\begin{aligned} M_{k2} = {} & -\dot{I}_{s12}\lambda_{s1} + \dot{I}_{s22}\lambda_{s2} - \dot{I}_{s23}\lambda_{s3} - I_{s12}\dot{\lambda}_{s1} + I_{s22}\dot{\lambda}_{s2} - I_{s23}\dot{\lambda}_{s3} + \\ & + \frac{W_s}{g} f_1[\ddot{X}_k(Z_a - Z_k) - \ddot{Z}_k(X_a - X_k)] - M_y + F_1Z_k - F_3X_k + \\ & + W_s f_1(X_k - X_a) \end{aligned} \qquad [15]$$

$$\begin{aligned} M_{k3} = {} & -\dot{I}_{s13}\lambda_{s1} - \dot{I}_{s23}\lambda_{s2} + \dot{I}_{s33}\lambda_{s3} - I_{s13}\dot{\lambda}_{s1} - I_{s23}\dot{\lambda}_{s2} + I_{s33}\dot{\lambda}_{s3} + \\ & + \frac{W_s}{g} f_1[\ddot{Y}(X_a - X_k) - \ddot{X}_k(Y_a - Y_k)] - M_z + F_2X_k - F_1Y_k \end{aligned} \qquad [16]$$

$$F_{k1} = \frac{W_s}{g}[\ddot{X}_k(1-f_1) + \ddot{X}_a f_1] - F_x \qquad [17]$$

$$F_{k2} = \frac{W_s}{g}[\ddot{Y}_k(1-f_1) + Y_a f_1] - F_y \qquad [18]$$

$$F_{k3} = \frac{W_s}{g}[\ddot{Z}_k(1-f_1) + \ddot{Z}_a f_1] - F_z + W_s \qquad [19]$$

$$M_{h1} = \dot{I}_{T11}\dot{\lambda}_{T1} - \dot{I}_{T12}\dot{\lambda}_{T2} - \dot{I}_{T13}\dot{\lambda}_{T3} + I_{T11}\ddot{\lambda}_{T1} - I_{T12}\ddot{\lambda}_{T2} - I_{T13}\ddot{\lambda}_{T3} +$$
$$+\frac{W_T}{g} f_2[\ddot{Z}_h(Y_k - Y_h) - \ddot{Y}_h(Z_k - Z_h)] + M_{k1} + F_{k2}(Z_h - Z_k) - \qquad [20]$$
$$- F_{k3}(Y_h - Y_k) - W_T f_2(Y_h - Y_k)$$

$$M_{h2} = -\dot{I}_{T12}\dot{\lambda}_{T1} + \dot{I}_{T22}\dot{\lambda}_{T2} - \dot{I}_{T23}\dot{\lambda}_{T3} - I_{T12}\ddot{\lambda}_{T1} + I_{T22}\ddot{\lambda}_{T2} - I_{T23}\ddot{\lambda}_{T3} +$$
$$+\frac{W_T}{g} f_2[\ddot{X}_h(Z_k - Z_h) - \ddot{Z}_h(X_k - X_h)] + M_{k2} - F_{k1}(Z_h - Z_k) + \qquad [21]$$
$$+ F_{k3}(X_h - X_k) + W_T f_2(X_h - X_k)$$

$$M_{h3} = -\dot{I}_{T13}\dot{\lambda}_{T1} \dot{I}_{T23}\dot{\lambda}_{T2} + \dot{I}_{T33}\dot{\lambda}_{T3} - I_{T13}\ddot{\lambda}_{T1} - I_{T23}\ddot{\lambda}_{T2} + I_{T33}\ddot{\lambda}_{T3} +$$
$$+ \frac{W_T}{g} f_2[\ddot{Y}(X_k - X_h) - \ddot{X}_h(Y_k - Y_h)] + M_{k3} + \qquad [22]$$
$$+ F_{k1}(Y_h - Y_k) - F_{k2}(X_h - X_k)$$

$$F_{h1} = \frac{W_T}{g}[\ddot{X}_h(1-f_2) + \ddot{X}_k f_2] + F_{k1} \qquad [23]$$

$$F_{h2} = \frac{W_T}{g}[\ddot{Y}_h(1-f_2) + \ddot{Y}_k f_2] + F_{k2} \qquad [24]$$

$$F_{h3} = \frac{W_T}{g}[\ddot{Z}_h(1-f_2) + \ddot{Z}_k f_2] + F_{k3} + W_T \qquad [25]$$

The effects of the products of inertia are negligible with the exception of I_{13}, but I_{13} only appears in the equations with $\dot{\lambda}_3$ which is very small. Therefore the products of inertia and the terms in which they appear may be neglected.

Also, for the case under consideration the values of $\lambda_{S1}, \dot{\lambda}_{S1}, \lambda_{S3}, \dot{\lambda}_{S3}, \dot{\lambda}_{T1}, \lambda_{T3}, \dot{\lambda}_{T3}$ may be neglected.

The angular velocity then reduces to:

$$\bar{\lambda} = \frac{\bar{r} \times (\bar{v} - \bar{v}_o)}{r^2} \qquad [26]$$

or, in specific terms for the shank, it becomes:

$$\bar{\lambda}_s = \frac{\bar{r}_{ka} \times (\bar{V}_a - \bar{V}_k)}{r_{ka}^2} \qquad [27]$$

and similarily for the thigh,

$$\bar{\lambda}_T = \frac{\bar{r}_{hk} \times (\bar{V}_k - \bar{V}_h)}{r_{hk}^2}$$

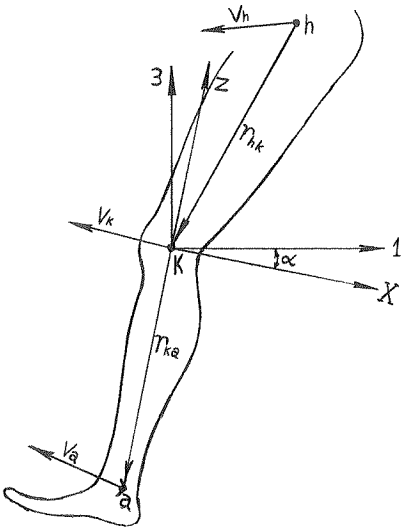

FIGURE 14.—Velocities and radius vectors of the joints and transformation of coordinate system.

The rotation of the segment about its longitudinal axis is not included in this expression. This can be easily written in terms of the x,y coordinates of the hip, knee, and ankle, and their time-derivatives.

As the moment of inertia varies with time, it must be transformed before substitution in equations 14–16 and 20-22. Since the most significant variation is that resulting from the rotation of the segment about the y axis it follows:

$$I_{11} = \ell^2 I_{xx} + (1 - \ell^2) I_{zz} \qquad [28]$$

$$I_{22} = I_{yy} \qquad [29]$$

$$I_{33} = (1 - \ell^2) I_{xx} + \ell^2 I_{zz} \qquad [30]$$

Where for the shank

$$\ell^2 = \frac{1}{1 + \left(\frac{X_k - X_a}{Z_k - Z_a}\right)} \qquad [31]$$

$$1 - \ell^2 = \frac{\left(\frac{X_k - X_a}{Z_k - Z_a}\right)}{1 + \left(\frac{X_k - X_a}{Z_k - Z_a}\right)} \qquad [32]$$

The moments of inertia for the thigh are similarly obtained.