PATTERN-RECOGNITION ARM PROSTHESIS: A HISTORICAL PERSPECTIVE—A FINAL REPORT[a]

Roy W. Wirta, B.S.M.E.[b]
Donald R. Taylor, B.S.E.E.
F. Ray Finley, Ph.D.[c]

Rehabilitation Engineering Center
Moss Rehabilitation Hospital
12th Street and Tabor Road
Philadelphia, Pa. 19141

BACKGROUND INFORMATION

The application of external power for the operation of artificial arms, hands, and hooks has intrigued inventors in and outside of prosthetics since the idea was first proposed, in Germany, shortly after World War I (1).

Nothing much seems to have happened until Alderson (2) proposed the idea of an electric arm to the International Business Machines Corp., about 1945. He received financial support from both IBM and the Veterans Administration.

Evaluation of the very ingenious and impressive models designed and fabricated by Alderson and his associates revealed that it was not possible for arm amputees to control the electrically actuated prostheses without conscious thought, an activity which, for all but the most severely disabled amputees, required a level of effort that exceeded the benefits received. And thus the research and development effort was directed toward "control" rather than "actuation."

---

[a]Support for this project between 1963 and 1973 was provided by: Contract No. Nonr 4292(00), Philco—Office of Naval Research 1963-1964; Grant No. RD-1643-M-66-C1, Temple—VRA 1964-1966; Grant No. RD-2169-M-67 and 68, Temple—VRA 1966-1968; Grant No. RD-2169-MP0-68-02, Temple—SRS 1968-1969; and Grant No. RD-23-P-55123/3, Temple—SRS 1970-1973.

Between 1973 and 1978 the Research and Training Center No. 8 and Rehabilitation Engineering Center No. 2 provided support for completion of the project under Grants 16-P-56804/3-14 and 23-P-55518.

[b]Roy W. Wirta is now at the VA Medical Center, La Jolla, California 92037.

[c]F. Ray Finley is now Director of Research, Temple University Medical Rehabilitation Research and Training Center (RT-8), 12th St. and Tabor Rd., Philadelphia, Pa. 19140.

Alderson used mechanical switches of both the on-off and proportional varieties to provide control of the actuators. The use of myoelectric signals for control seems to have been suggested first by Reiter, in Germany, about 1948 (3).

Berger and Huppert (4), in the United States, explored the feasibility in 1951, but little effort was made in the United States to use the technique until well after demonstrations in England in 1954 (5) and in Russia in 1958 (6).

The Russian investigators were the first to demonstrate that myoelectric currents could be used more or less successfully to control an upper-limb prosthesis when, in 1958, they introduced an artificial hand actuated by an electric motor and controlled by signals developed in the muscles left in the residual limbs of below-elbow amputees. This system was found to be useful to some amputees, but it did not help patients with amputations at higher levels.

A solution to the problem of providing coordinated control of several simultaneous motions was first proposed in 1963 by a research group at Philco-Ford under contract to the Office of Naval Research. The first use was the application of pattern recognition techniques in the processing of surface myoelectric signals in order to control underwater manipulators.

Subsequent studies sponsored by ONR and a grant from the Vocational Rehabilitation Administration (later to be SRS and RSA) led to application of this technique, specifically, to the problems of a multiple-axis externally powered arm prosthesis. This work was continued at Temple University and Moss Rehabilitation Hospital, where a team from the original research group formed the Biomedical Engineering Center in 1967 under DHEW sponsorship. The control of an above-elbow prosthesis was shown to be possible with virtually no training, and with little conscious effort by the amputee.

This report is the record of the work of that team. Partly because of a shift in priorities on the part of sponsoring agencies (and partly because, to be truly effective, artificial hands and hooks require sensory feedback systems which are not yet available) it has been decided to set aside this work in upper-limb prosthetics but to record the results, so that anyone who chooses to do so may make use of this experience.

INTRODUCTION

Considerable progress has been made, over the past two decades, in utilizing the natural phenomena of electrical potentials accompanying muscular contractions to control power in upper-limb

prosthesis applications. A number of myoelectrically controlled, electrically powered components, such as hands, wrists, and elbows, may be found on the market today. While these devices have gained acceptance, the applications have been limited largely to those cases requiring only one or two degrees of freedom. One of the reasons for this limitation is the absence of a suitable control technique for multiple-axis mechanisms.

Traditionally, designers have approached the control problem on a one-muscle-for-one motion basis; that is, a discrete muscle site is selected for control, and matched to a given actuator, to produce the desired motion. This approach is quite adequate when only one or two axes of motion need to be controlled. However, as the number of axes to be controlled increases, the quality of performance with a one-for-one control stagnates because of the additional levels of skill and attention needed to perform tasks.

In normal-movement activity, individual muscle groups do not respond to isolation but do so in synergistic groups. Every purposeful movement involves the contraction of many muscles, some quite remote from the body part being displaced. While one muscle group may be activated to produce a primary motion, others must be activated to fix and stabilize the limb or other body parts in *synergistic* support to the prime movers. Such supportive muscle activity may be found in the shoulder girdle, for example, each time the more distal parts of the arm are moved. Specifically, each time the forearm must develop a force against a load at the hand, a number of muscle groups in the chest, shoulder, and back must be activated to counter the resulting torques. Accordingly, it would appear logical that some control system based on a synergy-pattern-recognition concept should be useful for multiple-axis prosthetic applications.

The practicability of applying pattern recognition techniques to control multiple-axis prostheses from the myoelectric signals arising from synergistic activity of muscle groups in the shoulder, chest, and back has been demonstrated at the Temple University—Moss Rehabilitation Hospital in Philadelphia, Pennsylvania.

This report delineates the history and current status of that research and development effort.

HISTORY OF THE STUDY

Feasiblity Demonstration

The quest by the Philadelphia group for application of pattern recognition techniques to myoelectric control of upper-limb pros-

theses began in the mid-1960's. It was conjectured that a simple resistor network should be capable of classifying simultaneously-occurring signals corresponding to discrete arm movements. To prove this, myoelectric data were collected from six muscle sites, using surface electrodes, to discriminate four movements; namely, hand pronation and supination and elbow flexion and extension. The six sites chosen were the anterior and posterior heads of the deltoid, the long and short heads of the biceps, the lateral head of the triceps, and the pronator teres. The myoelectric data were collected from each of the sites simultaneously, and recorded, while a subject performed essentially isometric efforts of the four movements against modest external resistance. The signals were quantified into microvolt-second values and treated with a computer operating under a statistical, multivariate pattern classification program. The program generated weighting coefficients for each muscle site according to its significance in discriminating one movement from another. Based on the computer output, the predicted accuracy for correctly classifying an intended movement was 92 percent for elbow flexion, and 97 percent for pronation and supination. The resulting weighting coefficients then formed the basis for selecting discrete resistor values to be used in the recognition network.

A simple pedestal-mounted device (Fig. 1) demonstrated that hand pronation-supination could be discriminated from elbow flexion-extension, and that these functions could be carried out either independently or as a coordinated maneuver (7). The device used in the demonstration was a modified prosthesis in which the pull-cable and elbow-latching mechanisms were replaced by electric motors. One electric motor, a gear train and a ball screw provided elbow flexion and extension, while another motor and gear train provided pronation and supination. The device was controlled by the six muscle groups identified previously. The signals were fed into a small electronic package (about twice the size of a cigarette pack) which amplified, rectified, and filtered the six channels of myoelectric signals, and then presented them to the resistor networks which classified the intended movements to activate the proper motors in the correct directions.

The resulting performance with the pedestal-mounted model was encouraging. Pronation and supination were controlled in a reliable manner. Elbow flexion control was effective but sometimes occurred in addition to supination when only supination was intended. This agreed well with the accuracy predicted by the computer.

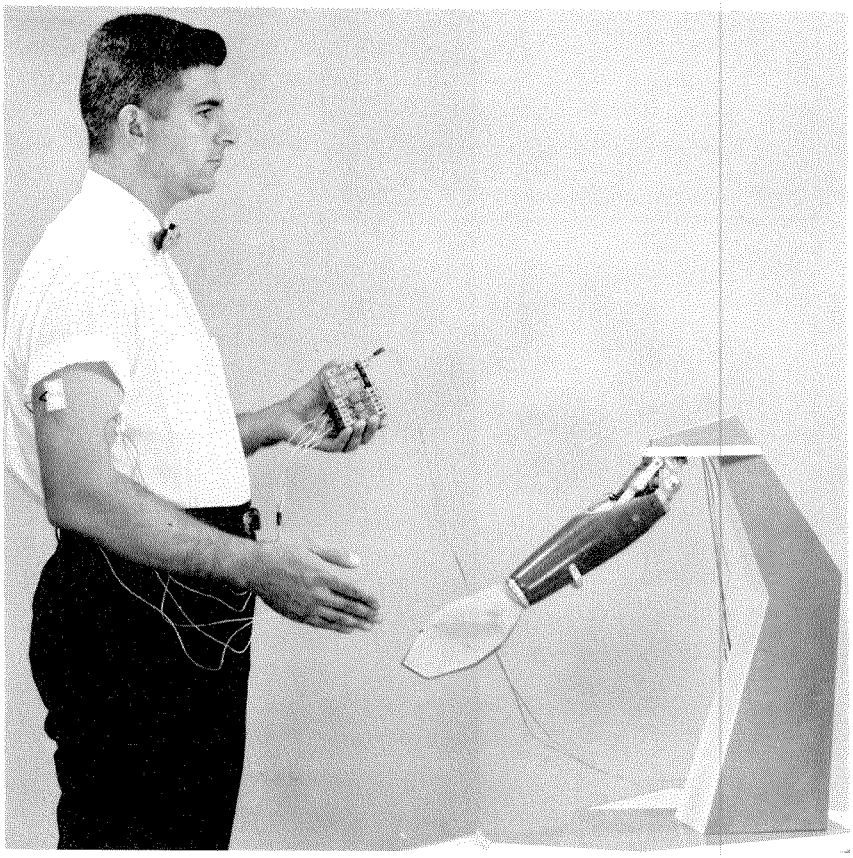

FIGURE 1—Pedestal-mounted model used to demonstrate feasibility.

Multiple-Axis Engineering Model

With the success of the initial phase of investigation in 1965, there was encouragement and reason to pursue the project further. A second set of studies was conducted to develop predictions about the reliability of the potential arm-control system. The questions raised centered about the consistency of the myoelectric activity (e.g., muscle synergy) when a variety of physical constraints or other factors influenced the movement response (2, 3, 4). These factors included varying applied loads and limb displacements as well as the effects of motor practice and fatigue.

Pursuit of the second study series prompted the decision to design and develop surface electrodes with special characteristics to improve recording fidelity. The same electrode design was envision-

ed to be used in the subsequent development of an engineering model multiple-axis prosthesis.

At the conclusion of the studies, it was apparent that a high level of confidence could be assigned to the consistency of synergistic muscle response. Confidence in the utility of myoelectric signals associated with the synergistic activity of multiple muscle groups, enabled goals to be set for continuing the project. The principal goal was to develop a myoelectrically controlled prosthesis for an above-elbow amputee, with acquired amputation, which would permit the simultaneous control of movements about four axes: humeral inward-outward rotation, elbow flexion-extension, terminal device pronation-supination, and prehension.

Data Treatment and Analysis

The fundamental approach to the control concept was to apply pattern recognition techniques to myoelectric signals arising, for the most part, from muscle sites other than prime movers, and specifically those which act synergistically in the performance of humeral, elbow, and forearm rotations. Further, in an above-elbow amputee with a short residual limb, the choice was limited to muscle sites not distal to the deltoids. Additionally, muscle sites associated with movements of the contralateral side were excluded. Because the choice was made to use surface electrodes to detect myoelectric signals, only those muscle groups lying near the surface of the skin were considered.

Acting within the boundary conditions cited above, the following 14 "candidate" muscle sites were selected for the investigation:

1. Anterior Deltoid
2. Middle Deltoid
3. Posterior Deltoid
4. Clavicular Pectoralis Major
5. Manubrial Pectoralis Major
6. Sternal Pectoralis Major
7. Upper Trapezius
8. Upper-Middle Trapezius
9. Lower-Middle Trapezius
10. Lower Trapezius
11. Rhomboideus Major
12. Latissimus Dorsi
13. Teres Major
14. Infraspinatus

A normal male adult was used as a test subject to obtain the primary myoelectric design data. An ergometer was used to control arm position while the subject maintained forces isometrically for

10 sec with his right arm, to the extent of about 5 percent maximal effort in the various modes. The test series contained 26 sets of activities involving forearm flexion, extension, pronation, and supination, as well as humeral inward and outward rotations while performing the efforts singly, in pairs, and in combinations of three. The data were quantitated by integrating for 50 ms periods and then processed on the CDC 6400 computer, operating under a statistical, multivariate pattern classification program called "Multinorm" (22). Patterns were classified according to parameters of their distribution, and separated on the basis of the "universally optimum" likelihood ratio, used to design weighting coefficients which provide maximum separation of the classes.

The linear portion of the discriminant function produced by the program is of the form:

$$\Sigma\ a_i\ X_i$$

where the a_i's are the weighting coefficients and the X_i's are the variables (in this case the magnitudes of the 14 myoelectric signals).

Weighting coefficients were computed for each of the six motions; i.e., elbow flexion and extension, inward and outward humeral rotation, and pronation-supination of the hand. These coefficients were then applied to the data and histograms of the summation $a_i\ X_i$ were plotted to determine how well each motion could be distinguished from all others by the separation of the summation distributions. Even though some overlap in distributions occurred, particularly for pronation and supination, it was quite clear that a summation threshold could be chosen for each motion to give good recognition rates.

Subsequently, data were obtained from four additional right handed, adult, male subjects of varying physical size and build, for comparative purposes.

Considerable variation in pattern classification scores, and in computed weighting coefficients, was noted among the subjects. Careful examination of the processed data indicated that there was a direct correlation between the proficiency of task performance during data taking and the number of correct pattern classifications for the various individuals. The original subject had practiced the sequence of forearm movements once a day for several days prior to actual taking of the data. His data showed the cleanest class separations of all the subjects tested. The next best classification scores were obtained from a subject who was a physical therapist and who understood the basic purpose of the data acquisition and treatment. The remaining three subjects were new to the tasks being performed, and data proved difficult to handle.

The weighting coefficients chosen for incorporation into the hardware were those of the original subject because of his superior motor skill. Because the eventual wearer of the prosthesis is required to approximate the motor activity of the design subject in order to successfully mobilize the device, a skilled motor performance model seemed to be the best choice. For further discussion of the effect of practice on myoelectric patterns, see reference (20).

Among the design objectives was one of reducing the total number of muscle sites required for acceptable control. With all other factors equal, preference would be indicated if a particular site was more useful in discriminating movements in the "most difficult" category. The weighting coefficients of four muscle sites were found to be relatively small for all motions, meaning that these sites participated almost equally in all the 26 test activities and, therefore, were not useful in distinguishing one motion from another. The four muscle sites eliminated were:

1. Clavicular Pectoralis Major;
2. Sternal Pectoralis Major;
3. Latissimus Dorsi; and
4. Upper Trapezius.

To refine the discrimination process, the data were treated again by computer, but with a program modified to truncate the data sites to ten. By this process, sites were differentially eliminated in accordance with the movement categories; that is, on the basis of whether the motions were executed independently, or in various combinations. In addition to the automatic truncation, data treatment was used to test the sensitivity of the weighting coefficients in discrimination by altering their values slightly. This treatment was useful to define the limits permissible without compromising the pattern recognition stability, in selecting resistor values for the control network design.

Weighting coefficients for both linear and logarithmic input variables were investigated to determine whether one offered better separation than the other. Better recognition was experienced using the logarithmic inputs; thus, in the design of the engineering model multiple-axis arm, the logarithmic inputs were used for the motion identification section; linear inputs were used for the magnitude (proportioning) control section. The weighting coefficients for both the logarithmic and linear inputs are given in Table 1.

With proper threshold selection, the weighting coefficients selected for design purposes produced the following accuracies in the recognition process when applied to the original data: 97 percent for elbow flexions, 96 percent for elbow extensions, 95 percent for outward humeral rotation, 43 percent for inward humeral rota-

a) Logarithmic Inputs

	AD	PD	MD	MPM	UMT	LMT	LT	R	TM	IS
Flexion	+2.751	-2.787	+2.226	+2.735	+0.620	-2.754	+2.186	+3.204	+1.509	+1.497
Extension	-2.383	+2.131	+3.517	+0.654	-1.222	+0.698	-0.544	-0.447	-0.922	-0.438
Pronation	+0.569	+0.229	+0.888	-0.681	-0.196	+1.449	+0.104	-1.419	+0.020	-0.721
Supination	-0.392	+0.438	-1.541	+1.228	+0.437	-0.556	-0.004	-0.287	+1.300	-0.221
Lateral	-1.663	+3.818	+0.604	-1.023	+0.912	+2.366	-0.371	+3.416	+0.386	-0.205
Medial	+0.815	-2.358	-0.652	+4.956	-0.114	-0.061	-0.429	-1.560	-0.198	-0.222

b) Linear Inputs

Flexion	+0.091	-0.110	+0.062	+0.086	+0.027	-0.049	+0.122	+0.089	+0.099	+0.035
Extension	-0.055	+0.087	+0.126	-0.001	-0.058	+0.039	-0.003	-0.026	-0.070	-0.009
Pronation	+0.042	+0.033	+0.013	-0.040	-0.013	+0.075	+0.010	-0.051	-0.027	-0.029
Supination	-0.013	+0.024	-0.075	+0.032	+0.030	-0.030	+0.026	-0.023	+0.050	-0.006
Lateral	-0.048	+0.178	+0.030	-0.029	+0.000	+0.080	-0.008	+0.129	+0.001	-0.014
Medial	-0.009	-0.080	-0.035	+0.203	-0.007	-0.013	-0.016	-0.042	-0.001	-0.016

Legend:

AD = Anterior Deltoid
PD = Posterior Deltoid
MD = Middle Deltoid
MPM = Manubrial Pectoralis Major
UMT = Upper Middle Trapezius
LMT = Lower Middle Trapezius
LT = Lower Trapezius
R = Rhomboideus Major
TM = Teres Major
IS = Infraspinatus

TABLE 1.—*Tables Listing the Computer-Derived Weighting Coefficients Used for Designing the Pattern Recognition Networks.*

tion, 70 percent for forearm supination, and 65 percent for forearm pronation.

It is to be noted that in experimental work with the engineering model arm, the muscle sites were reduced from ten to eight without seriously degrading performance. The final choice of muscle sites to control successfully the humeral inward-outward rotations, elbow flexion-extension, and terminal device pronation-supination in a coordinated manner included the following:

1. Anterior Deltoid
2. Middle Deltoid
3. Posterior Deltoid
4. Manubrial Pectoralis Major
5. Upper-Middle Trapezius
6. Lower-Middle Trapezius
7. Rhomboideus Major
8. Teres Major

The relative variations in myoelectric signals which might be expected as a result of variations in load, day-to-day differences, and isometric versus isotonic muscular usage had been investigated previously (8, 9, 10, 20) and it was anticipated that reasonable repeatability of the muscle synergy patterns would be obtained in normal arm movements as long as the humerus positioning was within 30 deg of vertical.

The ability to obtain reliable signals under varying activity circumstances is an important factor in the practicability of a myoelectrically operated device. Special attention was given to determining an optimal design, not only for the pickup electrodes which are described later, but also for the electrical characteristics of the amplifier itself.

In order to produce a well-designed amplifier, the spectrum of signals to be amplified had to be known. Additionally, amplifiers need to be tempered to improve the ratio of the desired-to-undesired signals. For these reasons the spectral distribution of typical surface myoelectric signals was investigated using filters with center frequencies of 15, 30, 60, 120, 240 and 480 Hz (Fig. 2). In general, the myoelectric signals produced maximum output in the 60 to 120 Hz range, with output falling successively for the lower and higher frequencies. Increased signal amplitude was obtained by locating the sensing electrode either proximal or distal to the motor point as opposed to straddling the motor point. Increased loading of a muscle site produced increased signal magnitudes, as expected, but in addition shifted the maximum output downward from the 120 Hz region to the 60 Hz region. Exercise-induced fatigue also showed a decrease in frequency.

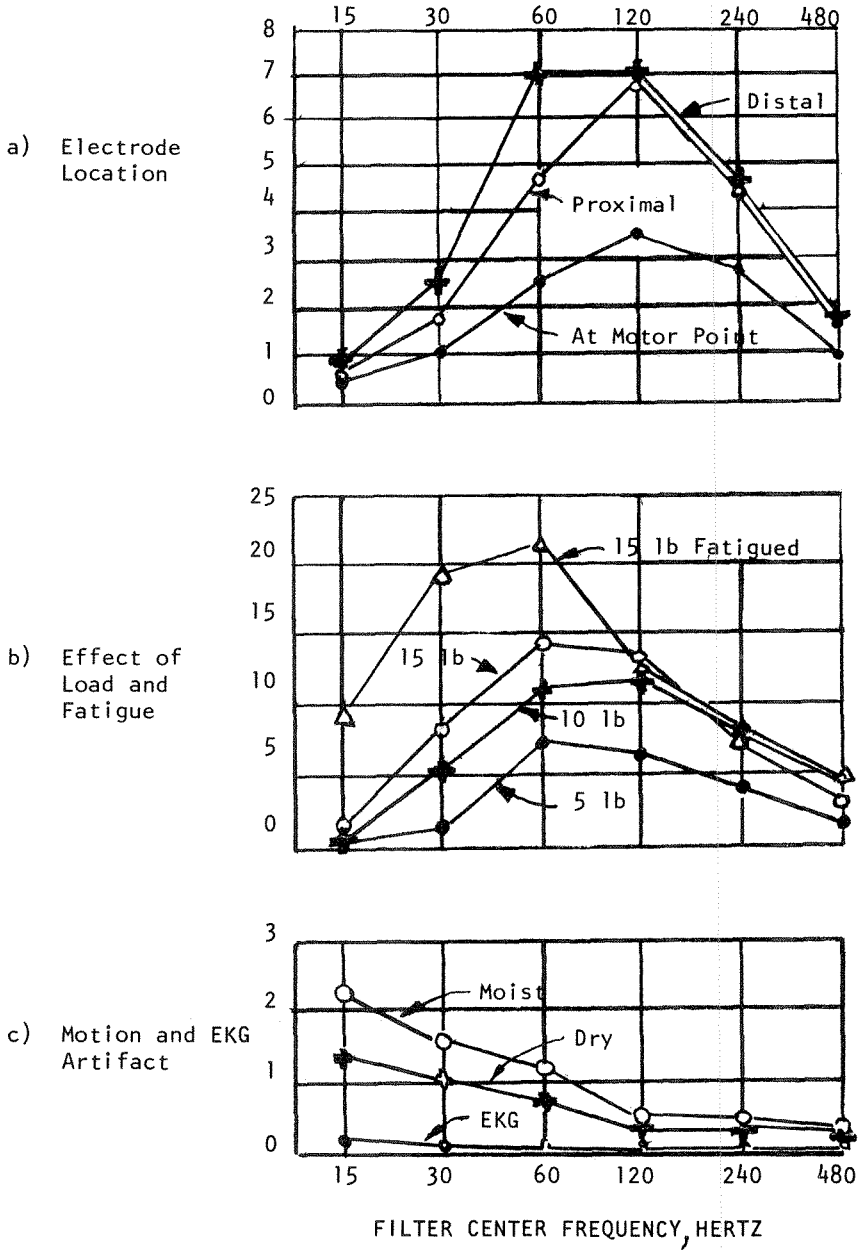

FIGURE 2.—Spectral distribution of myoelectric activity from the middle deltoid, expressed on the ordinate in microvolt-seconds. Electrode located distal to motor point, except in curve *a*.

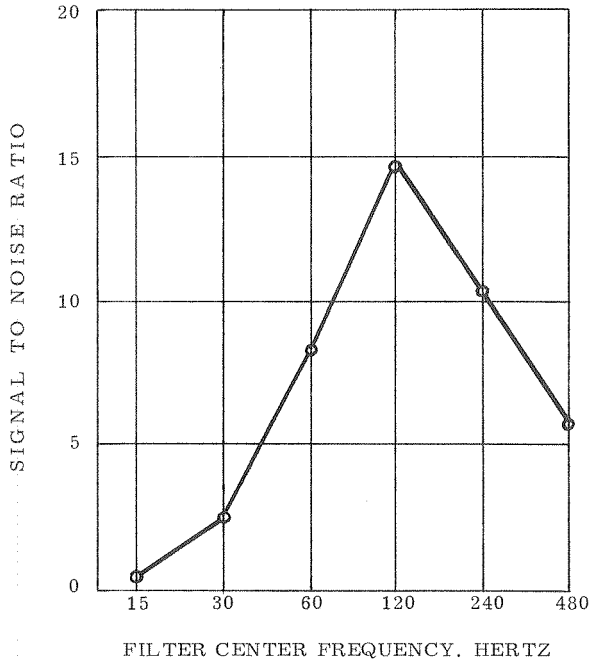

FIGURE 3.—Signal-to-noise ratio calculated from data depicted in Figure 2: 5-lb load, middle deltoid, divided by dry skin motion artifact.

Standard deviations of the quantitated myoelectric data collected during isometric contractions normally ranged from 20 to 50 percent of the mean, with 25 to 30 percent being most typical.

The most significant result of the spectral investigation was information relating myoelectric and artifact signals. The maximum signal-to-noise ratio was found in the 120 Hz region (Fig. 3). The distribution was not symmetrical; the decrease in ratio was more pronounced for frequencies below 120 Hz than it was for those above. Approximate slopes of 12 dB and 6 dB per octave were implied by the distribution.

DESIGN OF ENGINEERING MODEL

An engineering model experimental arm was designed and constructed to reach two main objectives: to demonstrate the practicability of the pattern recognition concept of multiple-axis control by amputees, and to establish the engineering design criteria needed to develop a wearable prosthesis.

Because there was almost a complete absence of a technical precedence directly applicable for the solution of the engineering problems associated with this project, the procedure was largely experimental. A test console constructed for the engineering model was specifically designed to meet the investigative requirements. Issues addressed through the use of the engineering model included: (i) socket and harnessing, (ii) surface electrode support, (iii) choice of design values for torques and speeds compatible with socket and harness stability, (iv) range of adjustment in response lag and backlash to accommodate for individual preference, (v) determine proportioning of torque and velocity feedback (internal to the mechanism), (vi) means to simplify the myoelectric check out and adjustment procedures, and (vii) assess the electrical power and energy storage requirements.

Design and performance details of the experimental engineering model prosthetic arm have been widely described (11, 12, 13, 14, 15). Accordingly, because its purpose was to serve as a test device suitable for deriving design criteria for a wearable prosthesis, its description here will not be elaborated in detail. Rather, what was learned and used to design a prototype wearable prosthesis will be discussed.

The philosophy which guided the design of the arm and control system was one of providing an engineering model which could be used effectively in the development of the control circuitry. Therefore, deference was given to accessibility of components and ease of modification, rather than to considerations of weight, noise, or cosmesis. The arm assembly was purposely overdesigned so that issues outlined earlier could be investigated.

All electronic components, except for local EMG amplification at the electrodes, were housed on a table-mounted console (Fig. 4). Knobs, switches, and card-mounted signal conditioners provided easy access for adjusting and measuring the numerous variables. The structural frame of the arm mechanism was constructed of aluminum plate and secured with screws to facilitate assembly and disassembly. The arm assembly measured 38 cm (15 in.) from tip of hook to elbow pivot axis, and 11.5 cm (4.5 in.) from the elbow pivot to the plane of attachment to the socket. The largest cross-section of the forearm measured 7 cm (2.75 in.) square. The mass of the arm assembly including the arm, socket, harnessing, and power cable, was 3.6 kg. The drive characteristics of the experimental engineering model arm are given in Table 2.

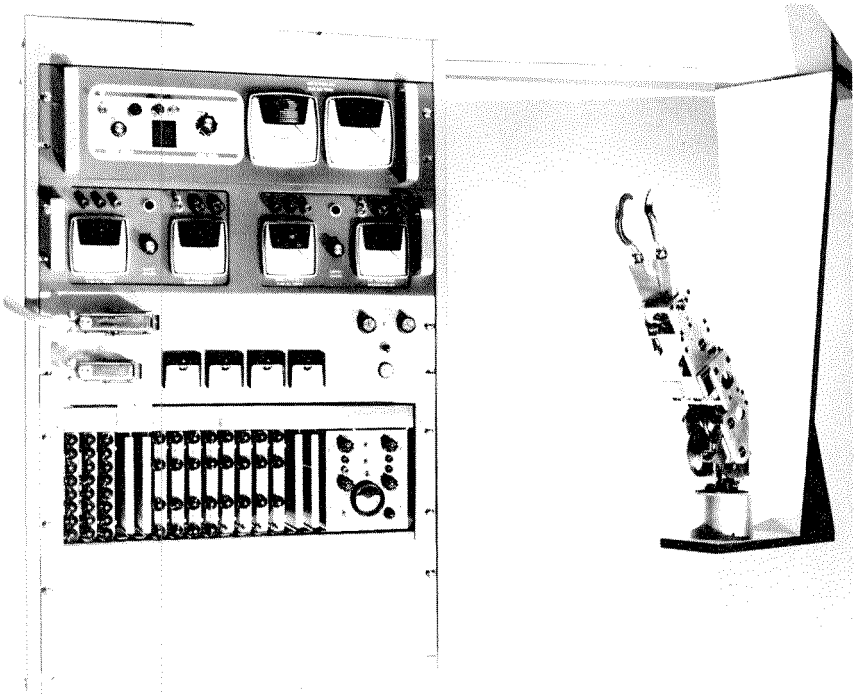

FIGURE 4.—Engineering model used for development of control circuitry.

TABLE 2.—*Experimental Arm Drive Characteristics. The Speeds and Torque Values are Based on 24 V Applied to the Motors*

	Elbow	Humeral rotation	Pronation-supination
Range of motion (degrees)	120	110	180
Maximum speeds (degrees/seconds)	300	300	300
Torque (Nm)	17	3.4	3.4
(lb - in.)	150	30	30

Socket and Harnessing

The amputee-prosthesis interface, critical in any prosthetic fitting, takes on added importance where externally powered components, especially humeral rotations, are concerned. Several criteria must be met in order to assure the conditions which permit the prosthesis to be operated in the manner for which it was design-

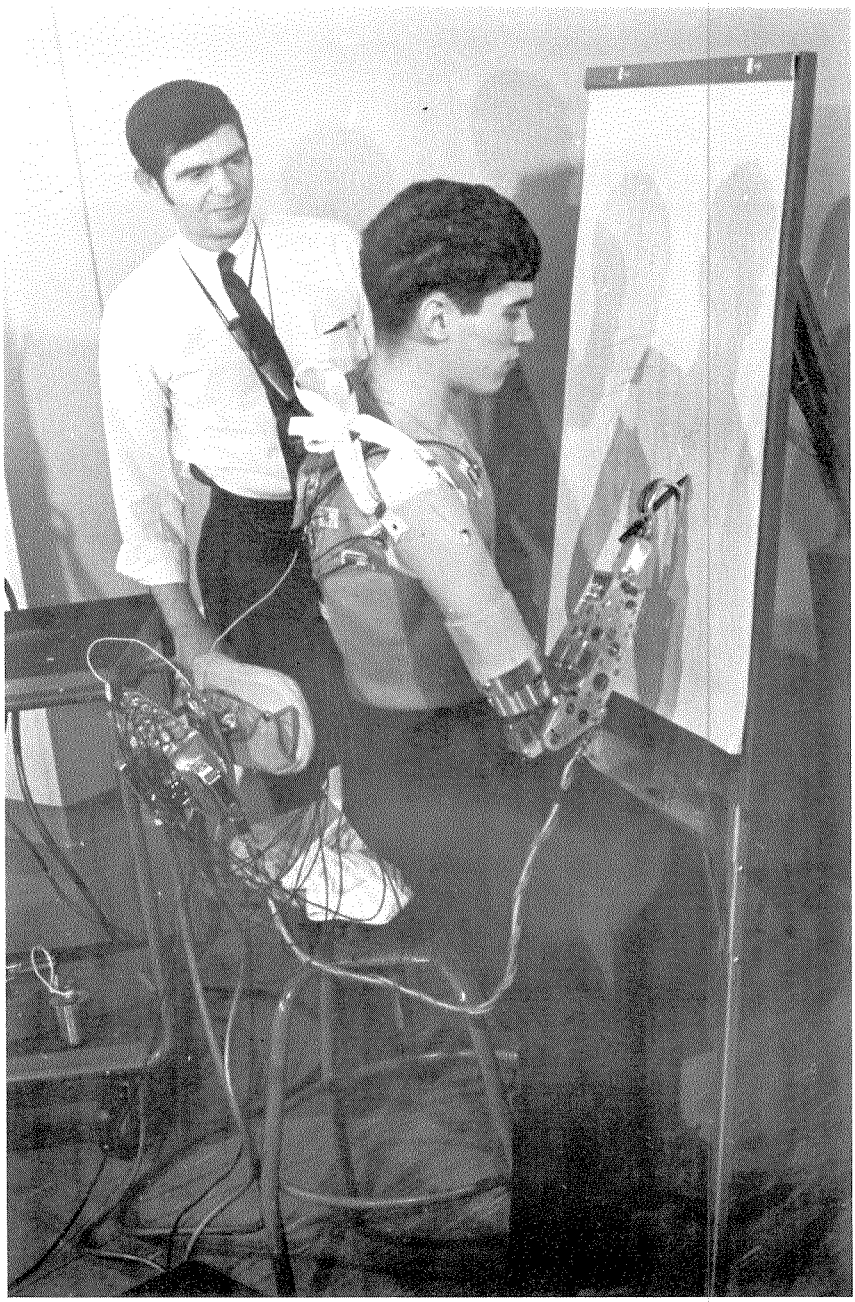

FIGURE 5.—Engineering model fitted to amputee for development of circuitry.

ed: (i) the weight of the prosthesis must be supported; (ii) the torques developed by the powered humeral rotations must be stabilized; (iii) some shoulder movement must be permitted; (iv) the electrodes must be housed and their contact with the skin must be maintained during use; and (v) ease in donning and doffing the prosthesis must be provided.

During the course of the experiments, several socket and harnessing configurations were tried with varying success. These included the following:

1. A conventional socket for an above-elbow amputee employing a Figure-of-Eight harness and axilla loop to the contralateral limb.
2. A conventional socket supported by a shoulder saddle and a simple chest strap.
3. An atmospheric pressure suspension (APS) socket developed by Northwestern University.
4. A socket which fits over the acromion and is held by a simple chest strap (Fig. 5).

The socket which fitted over the acromion and was held by a simple chest strap proved the most satisfactory for this application. The conventional sockets required excessive strap tightness to maintain the good contact with the residual limb needed with the powered drives. The APS socket, once donned successfully, proved to support the weight adequately but was considered too difficult for a bilateral amputee to don. (Without chest straps, the APS socket did not provide the stabilization needed for control of the powered humeral rotations.)

Electrodes and Electrode Support

The early work with the surface electrodes required sticking the detector assembly to the skin with double-sided, pressure-sensitive sponge tape. Additionally, it was necessary to couple the electrodes to the skin through an electrolyte gel. It soon became clear that this approach, while acceptable in a laboratory setting, was not suitable for a prosthesis intended for a bilateral amputee. In the course of surface electrode development, the choice of materials (silver-silver chloride electrodes for reliable stable operation), and the use of signal bandpass shaping, filtering, and amplification, ultimately resulted in excellent output signals from surface electrodes in direct contact with the unprepared, but clean, skin.

The surface electrodes (Fig. 6) resulting from the development program have the following characteristics:

a. Active electrode assembly 35 mm long, 18 mm wide, and 8 mm high.

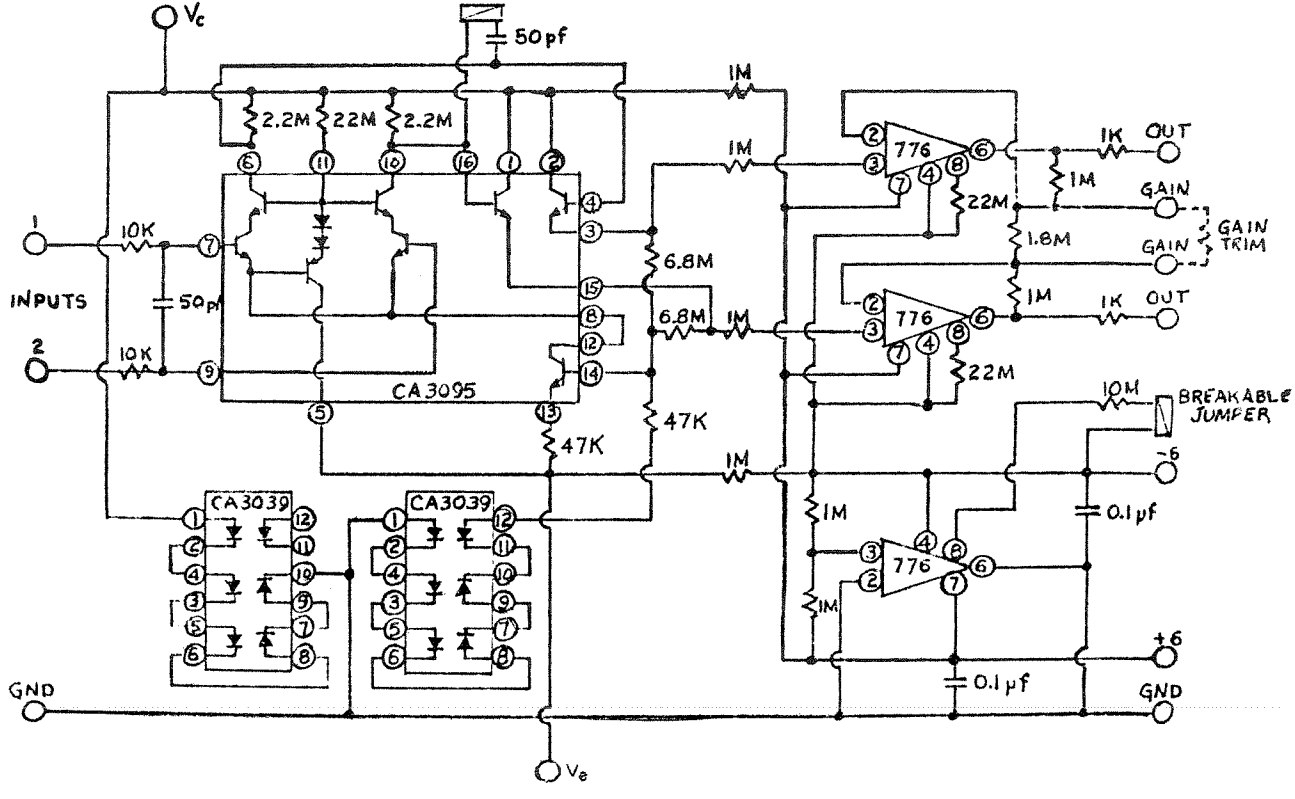

FIGURE 6.—Schematic of surface myoelectrode.

b. Two silver-silver chloride electrodes 9.5 mm in diameter and spaced 20 mm, center-to-center.
c. 30 MΩ input impedance.
d. 100 dB minimum common mode rejection measured at 1000 Hz.
e. 12-V battery supply; usable down to 10 V.
f. 3 nA input bias current.
g. 100 gain preamplifier feeding into a logarithmic output amplifier.
h. 70 to 700 Hz bandwidth rolling off 12 dB per octave to both sides.
i. 1 MΩ subject isolation from power supplies and output wiring.

The method of electrode support had not reached the high degree of refinement needed to assure reliability. The most recent configuration showing adequate performance is a vacuum thermoformed polyethylene shell, shaped to a plaster cast of the amputee's shoulder area. Recesses for the electrode assemblies are provided in the shell at the correct location and orientation with respect to the selected muscle sites in the chest, shoulder, and back for each individual. The socket includes the recesses for the three deltoid muscle groups, while the shell contains the recesses for the pectoralis major, upper-middle trapezius, lower-middle trapezius, rhomboideus major, and teres major.

It was believed that it was as important to provide an "electrical" fitting for each individual as it was to provide a mechanical fitting of the socket and harness. This should involve location and orientation of the electrodes in accordance with each individual's musculoskeletal features, as well as recognition threshold adjustments.

The shell was trimmed to provide compliant fingers for supporting the various electrodes, in order to allow the scapula to move and muscles to bulge without causing the electrodes to lose contact with the skin. The shell was riveted to the posterior aspect of the chest strap so that it became an integral part of the socket and harnessing assembly. This technique allows the electrodes to be located properly each time the arm is donned. The chest strap was secured in front by passing the end through a D-ring and completing the closure with Velcro.

Control Circuit Characteristics

The control console was designed to allow investigation of the quality of amputee performance when adjustments were made in the control circuit characteristics. It permitted adjustment and measurement of all the variables which govern the signal condition-

ing. The salient findings was the following:

1. Ex post facto measurement of myoelectric gains used for the test subjects showed a maximum spread from 6 μV to 72 μV (equivalent RMS sine wave input) in the signal required for full-scale linear amplifier output among the various subjects and myoelectric channels. Threshold settings for the same motion channels varied by about three-to-one among the subjects.

2. Forward amplifier gains varied by about four-to-one among the subjects. It appeared that some interaction in gain, as a function of prosthesis position or orientation, might be desirable if it could be provided between axes of motion; for example, increased forward gain in the elbow flexion channel for an outwardly-rotated humeral position.

Backlash settings of about 10 percent seemed to be desirable while larger values seemed to interfere with good control.

3. Adjustment during testing of time constant in the myoelectric signal low-pass filter following the full wave rectifiers revealed a preference for time constants shorter than 1/4 sec with 1/10 sec being the most frequently chosen. Longer time constants seemed to introduce a lag in response which tended to annoy the subject, while very short time constants allowed too much "jitter" from the ripple on the rectified signal.

Motor Control

The six gated magnitude signals obtained from the pattern recognition networks were combined in pairs to form three bipolar input signals to the control circuits for the three actuators. These control inputs, derived from the myoelectric inputs, were introduced at a summing point together with the torque and velocity feedback signals. The net signal was then passed through an adjustable lag circuit, an adjustable forward gain circuit, and then to a pulse-width modulator.

Conservation of power is very important in a practical device. A switching circuit of the pulse-width-modulation type was chosen for this application, though this does not in every case conserve power. Input signals were compared with a fixed-frequency sawtooth waveform using an integrated circuit comparator, and the resulting switching waveform was used to operate power transistors regulating the polarity and duration of connection of the motor armature and the battery supply.

Velocity feedback to the servos was originally derived from the differentiation of the signal from a position-indicating potentiometer at each axis. While the scheme served satisfactorily, there was no other need identified for the position information. Accordingly,

the system was modified subsequently to sense the back-electromotive-force (bemf) from the drive motor during the interval between pulses of power to the armature.

Adjustable torque feedback for each axis was provided by strain gages in a full bridge configuration, mounted on force-sensing beam members in the mechanical assembly. In each case, the torque feedback was sensed negatively to allow the motion to be driven in the direction of the externally applied load. This choice was made to provide compliance to the arm mechanism, to accommodate externally imposed constraints in much the same manner as the normal limb accommodates.

Speeds and Torque Feedbacks

The experimental model arm was used to determine the practical range of speeds for motor drives. When the socket and harnessing had been refined enough to provide a stable, intimate fitting to the amputee's residual limb and shoulder, judgments about the preferred angular velocities were possible. Six of ten amputees reported that the operation tended to be sluggish when the maximum speed was less than 3 rad/sec (24 rpm, 175 deg/sec), and that they lacked confidence in control when the maximum speed exceed 5 rad/sec (48 rpm, 290 deg/sec). To the extent to which experimenting was done, maximum speeds in the order of 4 rad/sec (40 rpm, 230 deg/sec) served satisfactorily in all four axes of motion.

Proportional speed control of the motor drives enhanced performance substantially. All ten subjects were able to control proportionally both the elbow flexion-extension and humeral inward-outward rotations, but they had difficulty in proportionally controlling the pronation-supination of the terminal device.

Negative torque feedback, internal to the control circuits in elbow flexion-extension and humeral inward-outward rotations, was found to improve performance markedly whenever tasks involving mechanical coupling to a load occurred. Examples of this included turning a crank and printing or writing on a sloping easel. The success of this feature stemmed from the compliance provided within the arm mechanism to external loads. In contrast, torque feedback in the pronation-supination function did not improve performance appreciably. All subjects experienced some difficulty in benefiting from the torque feedback and proportional control of the pronation-supination drive. The tendency was to "jog" the drive rather than maintain a smooth control. However, testing was not extended over enough time to demonstrate conclusively that proportional control and negative torque feedback for the pronation-supination drive are without benefit.

Prehension Control

Prehension control is the only movement for which a discrete signal source is required. This is so because there is no shoulder, chest, or back musculature contributing to the opening and closing of the hand.

The choice of method and technique for prehension control may be varied but none should interfere with the function of the prosthesis, or involve the contralateral arm, or be inadvertently activated.

The choice made in this development program was to pursue the myoelectric avenue. Evidence supporting the use of the platysma muscle site has been documented (16). Preliminary testing showed acceptable results when the platysma was used in conjunction with the pattern recognition control functioning from the eight muscle sites identified previously. The best placement has been cranially and medially on the clavicle. Proportional control has been demonstrated, requiring but little learning. The platysma appears to be sufficiently independent of musculature associated with head and neck movements to provide relatively interference-free performance.

WEARABLE MODEL

A wearable version of the prosthesis was designed and fabricated, based upon the experience gained from the tests with the engineering model arm. The speed and torque performance objectives were reduced, in order to reduce motor sizes and to effect about a kilogram reduction in total weight. Some simplification, as well as complete micro-miniaturization, of the electronic circuits made it possible to incorporate them within the prosthesis itself.

Figures 7a and 7b illustrate the wearable model. The mechanical assembly comprises the socket, harness, electrode support, arm structure, and the separate but associated battery pack. Housed within the arm structure are the motor drives and the electronics and control subsystems. The structural parts of the arm are made of aluminum alloy for lightness and strength. The total mass of the arm assembly, including the socket, harnessing, and electrode support but excluding the battery pack, is 3 kg. The mass of the separate battery pack is 5 kg.

Control System Features

The block diagram (Fig. 8) represents the control system of the wearable device and is somewhat simplified from that of its engineering-model predecessor. The myoelectric amplifiers were made

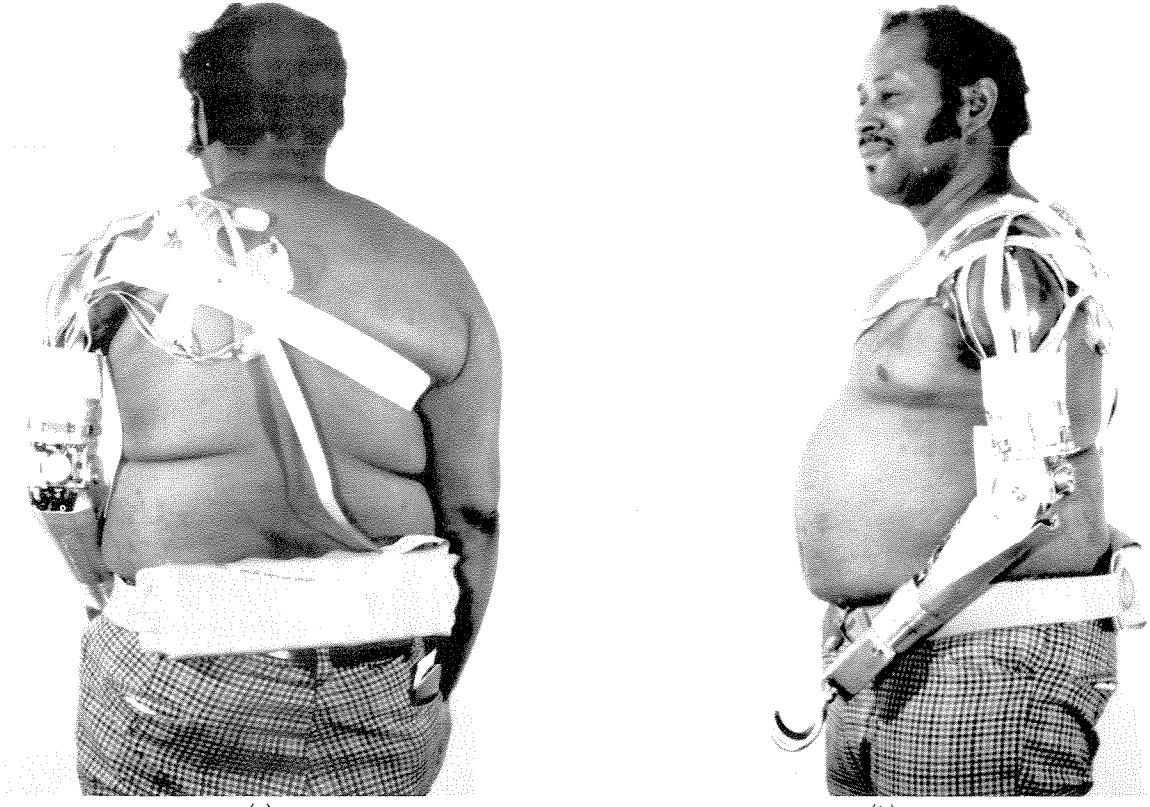

(a) (b)

FIGURE 7.—Posterior view (a) at left, and anterior view (b) at right, of patient wearing experimental externally powered arm prosthesis using pattern-recognition of myoelectric signals as a source for control.

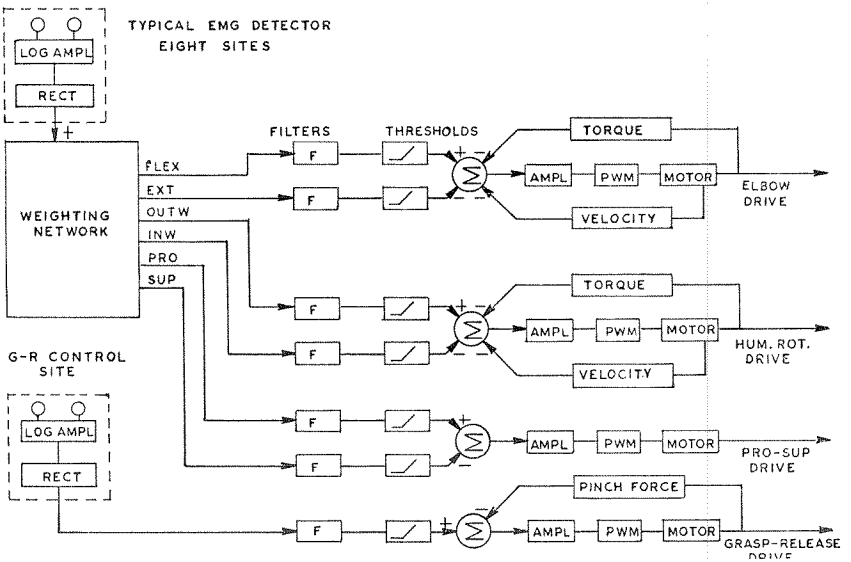

FIGURE 8.—Control system of wearable device, block diagram.

logarithmic, which eliminated eight gain adjustments, and were fabricated as hybrid circuit assemblies which were combined with the pre-amplifiers described earlier in this report. Both were incorporated into the electrode structures themselves. Placing each amplifier/rectifier at the signal pickup site helped to reduce the component density within the prosthesis itself.

Instead of using separate linear and logarithmic channels for motion recognition and magnitude proportioning, a single weighting network was used for each motion. The magnitude by which the identification threshold was exceeded was taken as the proportional control signal for use in regulating motor current.

In addition, torque and velocity feedbacks were eliminated in the pronation/supination channel and the velocity feedbacks for the two elbow motions were derived (21) by sampling motor back-emf during the off portion of the pulse modulation cycle. Although these changes and compromises in control circuit configuration seemed to be judicious from the previous experience with the more elaborate engineering model, there was not sufficient subject testing with the wearable version to determine whether the performance trade-offs with weight, volume, and simplicity were appropriate.

Mechanical Features

The wearable model prosthesis includes four axes of electrically powered motion, providing elbow flexion-extension, humeral

medial-lateral rotation, terminal device pronation-supination, and terminal device opening-closing. Some of the design features include:

1. All electronics housed within the arm assembly;
2. Socket easily attached or detached;
3. Surface electrodes integral with socket and harnessing;
4. Modular wrist assembly easily removed;
5. Wrist incorporating a quick-disconnect adapter for easy change of terminal devices.

The ranges of motion, the speeds, and the output torques and force are listed in Table 3. The speeds were derived from experience with the experimental engineering model arm. The ranges of motion, torques about the axes, and the pinch force are based upon recommendations from workshops sponsored by the Committee on Prosthetics Research and Development (CPRD) on powered upper-limb prosthetics components (18, 19, 20). The design output torque is based on the load to be lifted and accelerated. The Sixth Workshop panel recommended that a powered prosthesis should be capable of a maximum "live lift" of 1.5 lb (0.7 kg) at the tips of the terminal device.

TABLE 3.—*Range of Motion (ROM), Maximum Speeds, and Rated Output Torques and Force Developed by the Advanced Model Prosthesis*

Axis	R.O.M.	Max. Speed, Rad/Sec.	Torque or Force
Elbow	130 deg	4.5	5 Nm
Humeral	90 deg	4.0	3 Nm
Pro-Sup	180 deg	4.0	2 Nm
Powered Hook	O/C 8 cm	O/C 1.2 sec.	45 N

The actuators for all drives are inexpensive permanent-magnet direct-current motors obtained from Pittman, and are nominally rated for 12 V. The speed reductions comprise commercially available good-quality (AGMA quality 10 or better) gearing. Worm gearing was used extensively to minimize noise and for its self-locking features—but compromising efficiency in the process. Slip clutches were incorporated into the elbow, humeral, and wrist drives, to protect both the patient and the mechanism against inadvertent application of excessive torques.

Torque detection in the elbow and humeral rotation drives was accomplished with strain gages mounted on flexural members used to transmit force against the last stage of gearing (spurs). In each application the flexural members are relatively stiff so as not to contribute low frequency oscillatory disturbances. Nominally the

maximum design stress used was about 60 to 80 percent of the yield stress listed in tables of properties for the materials used.

Battery Pack

One of the objectives, in the development and testing of both the experimental engineering model and the wearable model, was to estimate and predict the electrical power a wearable prototype prosthesis may require during a nominal 16-hr period of light-duty daily activities. Based upon experience with the experimental engineering model, a battery with a capacity of 6 Ah was chosen for the wearable model. That pack, having a mass of 5 kg, consisted of nickel-cadmium batteries arranged into a belt worn at the waist, as may be seen in Figures 7a and b.

A thorough evaluation has not been made of power requirements by categories of prosthesis service. However, preliminary estimates now indicate that a capacity of 3 Ah appears to be adequate.

DISCUSSION AND SUMMARY

The practicability of pattern recognition in the myoelectric control of multiple-axis upper-limb prostheses has been effectively demonstrated. Ten above-elbow amputees, five right and five left, were each able to perform coordinated movements during the first testing appointment. The fact that natural physiological function was used as the model for design of the control was undoubtedly the basis for the frequent answer: "I do what I did before I lost my arm," given by test wearers in response to inquiry about how they controlled the prosthesis.

The successes are directly attributable to the rather extensive investigation of the role of synergistic muscle groups, located in the shoulder, chest, and back, which serve to stabilize the shoulder while forearm movements are executed. A computer was used to determine the interrelation among the muscle sites when endeavors of forearm and wrist movements were executed in both simple and coordinated manners. The numerical values generated by the computer assigned each muscle-group weighting coefficient, which may be likened to "voting power," for discriminating one set of intended movements from others. The discriminating effectiveness was realized in a relatively simple resistor network and associated threshold settings to control the prostheses in accordance with the intended movement by the amputee.

The recognition network operates in two ways. First, it recognizes the intended movement and allows the signals to activate the appropriate motor control circuits. Second, it tends to block out (not

recognize) movement patterns not included in the sampling. This works to advantage in blocking spurious (and certain types of inadvertent) myoelectric activities, but this also works to *limit the activities* in which an amputee may wish to engage. For example, when reaching, it is often necessary to extend one's arm by using shoulder flexion, extension, or abduction. The existing recognition network does not include shoulder movements as they were not included in the sets of myoelectric data collected for analysis: the data management task was already sizable, and would have been too large to manage with the equipment available at the time. Therefore, the scope of the project was limited to a demonstration of the feasibility of pattern recognition without shoulder movement.

This means that an amputee can perform a variety of manipulative tasks in a work volume which does not require shoulder movement exceeding 30 deg from the vertical. Such a demonstration sets the stage for additional investigation which would enlarge the work volume by including shoulder movement in the pattern-recognition process.

The recognition network was based principally upon data derived from one normal, right-handed, experienced, and proficient subject. This choice was made to enhance the likelihood of success, which indeed occurred. The fact that ten amputees were able to control the prosthesis demonstrates the worth of the statistical aspect of the computer program in designing weighting coefficients. (The subjects were equally divided between left and right amputees; only the electrical polarity to the pronation-supination and the humeral rotation motors required reversing to enable use of the prosthesis.)

Immediately following donning, each amputee who was tested with the engineering experimental model observed that the device was heavy. However, once the mechanism was energized, each remarked that the weight did not seem burdensome. The 25 percent weight-reduction and well-fitting socket and harness achieved with the wearable model helped considerably in providing comfort to the amputee. It is not expected that substantial further weight reductions can be realized while still providing the torques needed for fast servo response.

Considerable advance in engineering design was realized between the experimental and wearable models. Clearly, the wearable model is not a prototype; however, it is technically close to the stage needed to carry the development to a prototype model.

It is of interest to note that one of the amputee subjects, 40 years of age, had suffered the loss of his arm at the age of 15. This subject was unable to perform pronations and supinations of the terminal device, except while reinforcing the execution by pro-

nating and supinating his contralateral sound limb.

With his eyes closed, each amputee was able to position the prosthesis to about 45 deg and 90 deg elbow flexions on command. Presumably, he was relying on the force distribution on the residual limb. Visual feedback was necessary for the pronation-supination positioning, since there was no alternate means by which to sense position. The ability to position humeral rotation without visual feedback was mixed among the subjects, possibly relating to the quality of the socket and harnessing used at the time of the test. It would seem that the potential utility of this sophisticated efferent system may be limited by the lack of an appropriate sensory (afferent) complement.

Acknowledged is the fact that the system is complex and costly, and one is aware of waning emphasis upon further development of myoelectric controls. This attitude may be attributable to several reasons, among which are cost/benefit, decreasing incidence of bilateral above-elbow amputations, and a shift of attention to more severely disabled populations such as the spinal-cord-injured. This period in history may be an appropriate time to evaluate priorities and to cast them into a future perspective.

REFERENCES

1. Schlesinger, G.: Der Mechanische Aufbau der Kunstlichen Glieder, *In* Ersatzglieder und Arbeitshilfen. Borchardt, M., et al., Eds., J. Springer, Berlin, 1919.
2. Alderson, Samuel W.: The Electric Arm. (Chapter 13 in Klopsteg and Wilson's, "Human Limbs and Their Substitutes," McGraw-Hill, 1954, reprinted by Hafner Press, 1969).
3. Reiter, R.: Eine Neue Electrokuntshand, Grenzgeg. Med., (4):133, 1948.
4. Berger, N., and C. R. Huppert: The Use of Electrical and Mechanical Muscular Forces for the Control of an Electrical Prosthesis, Amer. J. Occup. Ther., 6:110-14, 1952.
5. Battye, C. K., A. Nightingale, and J. Whillis: The Use of Myoelectric Currents in the Operation of Prostheses. J. Bone Joint Surg., 37-B, 506, Aug. 1955.
6. Kobrinskii, A. E., et al.: Problems of Bioelectric Control. *In* Automatic and Remote Control: Proceedings of the First International Congress of the International Federation of Automatic Control, 2:619, Moscow, 1960.
7. Wirta, R. W., D. R. Taylor, and F. R. Finley: Engineering Principles in the Control of External Power by Myoelectric Signals. Arch. of Phys. Med., 49:294-296, 1968.
8. Finley, F. R. and R. W. Wirta: Myocoder Studies of Multiple Myopotential Response. Arch. Phys. Med., 48:599-601, 1967.
9. Finley, F. R. and R. W. Wirta: Myocoder Computer Study of Electromyographic Patterns. Arch. Phys. Med., 48:20-24, 1967.
10. Finley, F. R., R. W. Wirta, and K. A. Cody: Muscle Synergies in Motor Performance. Arch. Phys. Med., 49(11):655-700, 1968.
11. Krusen Center for Research and Engineering: Multiple Axis Myoelectrically Controlled Prosthetic Arm—Final Report. Social and Rehabilitation Service, Grant RD-2169-MPO, Sept. 1970.

12. Taylor, D. R. and R. W. Wirta: Development of a Myoelectrically Controlled Prosthetic Arm. *In* Advances in External Control of Human Extremities - Proceedings of the Third International Symposium on External Control of Human Extremities, Dubrovnik, Yugoslavia, Aug. 25-30, 1969. Belgrade 1970.
13. Taylor, D. R. and F. R. Finley: Multiple-Axis Prosthesis Control by Muscle Synergies. *In* Control of Upper-Extremity Prostheses and Orthoses (Chapter 18), Edited by Peter Herberts, Roland Kadefors, Robert Magnusson, and Ingemar Peterson; Charles C Thomas, Springfield, 1974.
14. Finley, F. R., R. W. Wirta, and D. R. Taylor: Prosthetic Arm Control by Pattern Recognition. Proceedings of the Third Annual Meeting of the Society for Neuroscience, San Diego, Cal., Nov. 7-10, 1973.
15. Finley, F. R.: Pattern Recognition of Myoelectric Signals in the Control of an Arm Prosthesis. J. Can. Physiother. Assoc., 21(1):19-24, 1969.
16. Rae, J. W. and J. L. Cockrell: Clinical Applications in Myoelectric Control. Bull. Prosth. Res., BPR 10-16:24-37, Fall 1971.
17. Committee on Prosthetics Research and Development, Report of Sixth Workshop Panel on Upper-Extremity Prosthetic Components. National Academy of Sciences, Oct. 1968.
18. Committee on Prosthetics Research and Development, Report of Seventh Workshop Panel on Upper-Extremity Prosthetics. National Academy of Sciences, July 1969.
19. Committee on Prosthetics Research and Development, Externally Powered Prosthetic Elbows - A Clinical Evaluation. National Academy of Sciences, Report E-4, 1970.
20. Wirta, R. W., K. A. Cody, and F. R. Finley: Myopotential Patterns and External Control - Effects of Practice and Fatigue. Contract 4294(00), Psychological Services Division, Office of Naval Research to Philco-Ford Corporation, May 31, 1967.
21. Wager, M., E. Andersson: Electronic Circuit for Velocity Control of DC Motors by Means of Pulse Width Modulation and EMF Sensing. FOA 2 Report C 2561-H5, Swedish Defense Research Establishment Department 2, Stockholm, Sept. 1972.
22. Harley, T., et al.: Semi-Automatic Imagery Screening Research Study and Experimental Investigation. ASTIA Document 410261, 1963.