TRANSFERRING LOAD TO FLESH: PART IX CUSHION STIFFNESS EFFECTS[a]

Leon Bennett M.A.E.
Chief, Mobility Engineering Laboratory
VA Prosthetics Center
252 Seventh Avenue
New York, New York 10001

Himanshu Patel M.S.[b]
Research Assistant
Department of Mechanical Engineering
Columbia University
New York, New York 10027

ABSTRACT

Stresses developed within flesh in contact with a cushion are examined analytically. Compressive, tensile, and shear stresses within flesh in proximity to a bone are given as a function of cushion stiffness (major parameter) and the overall Poisson's ratio of flesh (minor parameter).

It is shown that an individual already sitting on a soft cushion recieves relatively minor benefit when a still softer cushion is substituted. This result follows from the fairly flat (saturated) trend of both shear and tensile stress with respect to cushion stiffness, once the soft cushion domain (less than 10 PSI) is entered. Only flesh normal stress (compression) responds significantly to incremental changes of stiffness within the soft cushion range; reducing the cushion stiffness 50 percent will typically reduce local compressive stress by roughly 20 percent. While such a gain is real, it is also modest.

INTRODUCTION

Our concern is with soft-tissue trauma developed by the handicapped. In particular, pressure sores resulting from prolonged contact

[a]This work is based on work performed under sponsorship of the Veterans Administration in cooperation with the HEW-RSA, program 13.627.
[b]Mr. Patel was supported in part under HEW-RSA grant 23-P-59173/2-02.

with a loading member (orthosis, cushion, bed, prosthesis, etc.) are the subject of this series of articles. At issue is the practical problem of how trauma can be prevented.

While we do not fully understand the etiology of decubiti, it is clear that the intensity of stress within soft tissue is related to trauma, albeit in a complex fashion (1). To advance in this area, it would be useful to understand the manner in which stress within flesh is distributed as a function of anatomy, cushioning, and load.

In this particular work we address the following question: What is the effect of cushion stiffness on those flesh stresses experienced in proximity to the cushion? For example, are soft cushions more effective than hard cushions in reducing the stress within flesh?

To solve this question we shall employ an analytical procedure of severely limited power. Unfortunately, the complexities of flesh as a material are so great as to force the employment of a number of simplifying assumptions in order to achieve a practical solution. For example, it is well known that soft tissue is viscoelastic, discontinuous, non-linear, anisotropic and history-dependent. To treat with the full complexities of such a material is well beyond the current state of stress analysis. In the particular analysis pursued here, we shall take soft tissue to be "well behaved" and linear. In other words we are ignoring the viscoelastic, discontinuous, non-linear, anisotropic, and history-dependent reality in favor of a far simpler, "ideal" material. Such a course is not without danger and the reader may well inquire concerning the realism of results generated in such a fashion.

Lacking experimental results in the form of actual stress measurements in flesh, we are unable at the present time to attest to the accuracy of our procedures. We can say that experimental tests conducted upon gels reputed to be fleshlike in their characteristics have confirmed the existence of every major stress trend revealed by the type of analysis given below (2). While not satisfactory as proof of modelling veracity, the essential agreement between mathematical and gel physical models does offer hope of ultimate modelling confirmation through animal tests.

Noting these uncertainties, how is the material best used? We believe the results fall somewhere between the qualitative and the quantitative in their predictive power. Prudent usage suggests that powerful trends be viewed seriously; however, in all likelihood, minor quantitative differences are not significant.

METHOD OF PROCEDURE

The basic approach follows that given by Vlasov and Leontev (3), in which elasticity theory, employing the method of displacements, is combined with certain variational techniques

solution to the stress state within a soft medium under load. Classical elasticity theory alone is incapable of generating realistic answers; any attempt to force the employment of elasticity theory produces numerous singularities. Introducing variational concepts permits a more realistic distribution of stress in the neighborhood of physical discontinuities.

The procedure is two-dimensional; i.e., we are considering a slice of cushion, flesh and bone that extends without limit in the z direction, although practical dimensions do exist in the x and y directions. Both the flesh and the cushion are taken to be "well-behaved;" i.e., each possessing a clearly defined modulus of elasticity and Poisson's ratio and experiencing deflection as a linear reaction to stress.

The solution employs the separation of variables method to delineate x and y displacements. The x dependent functions are determined by strain energy techniques. The y dependent functions are approximated by an assumed relationship.

The actual solution to a two-layered model, given as an Appendix to this article, is believed original. However, all of the preliminaries are taken whole from Vlasov and Leontev. Where essential, these preliminaries are repeated in the Appendix. However, for a fuller understanding of the entire process the reader is referred to Vlasov and Leontev.

A full listing of nomenclature is given in the Appendix. While units are optional so long as they are coherent, the actual units employed in our calculations were British Imperial units, such as inches and pounds.

RESULTS

The particular case examined is one where a long bone ($L=5$) presses heavily ($Po=20$) upon flesh possessing a fixed stiffness ($E_{1S}=6.6$) and either of two Poisson's ratios (0.36 or 0.45). The flesh is supported by a cushion of fixed thickness ($h_2=1\frac{1}{2}$) and Poisson's ratio ($\gamma_{2S}=0.15$) (Fig. 1). Cushion stiffness is a major parameter and variations in the range 3.3 to 500 PSI are considered. At issue is the stress level within the flesh as the cushion stiffness is changed.

The form of solution is insensitive to flesh thickness (h_1). Attempts to introduce flesh thickness as a working parameter were defeated by this very lack of sensitivity. Consequently, the actual flesh thickness chosen for calculational purposes ($h_1=1\frac{1}{2}$) was based on considerations of convenience; this value is properly taken as one representing any arbitrary thickness rather than a specific value. Computational results are given in Figures 2–4.

Shear stress maximum values (Fig. 2) depict a basic trend of continuous reduction with increasing cushion stiffness. In other words,

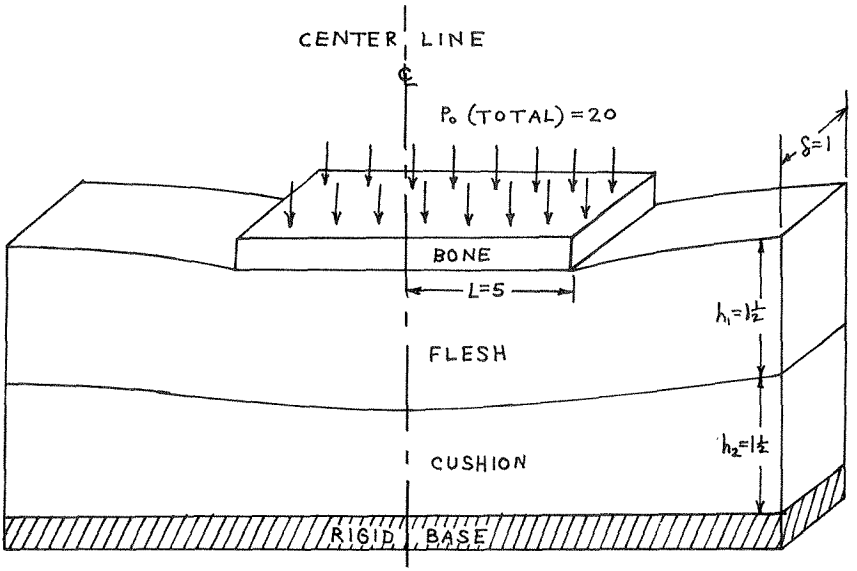

FIGURE 1.—Schematic of flesh loading condition examined in this work. The main parameter is cushion stiffness. Flesh Poisson's ratio is a minor parameter. The output consists of stress within the flesh as a function of major and minor parameters.

the stiffer the cushion, the lower the shear stress. Note further that as the flesh is taken to possess a higher Poisson's ratio, the corresponding shear stresses are somewhat lower.

A typical distribution of shear stress with respect to flesh depth is given in Figure 3. The particular flesh Poisson's ratio represented by the plot is 0.36 and the Young's modulus 6.6. The cushion Poisson's ratio is 0.15 and the cushion Young's modulus is treated as a parameter. Note that flesh shear stress increases continuously as one moves from the bone towards the skin. Thus maximum flesh shear stress values exist at the cushion interface. These maximum values are always located in the vicinity of the bone end.

Normal stresses are given in Figure 4. An upper set of four curves depicts the compressive stresses on the center line and at the bone edge for two different flesh Poisson's ratios. The peak normal stress values shown in Figure 4 can not be associated with any particular flesh depth (as given in the case of shear, immediately above) owing to the use of assumption 5 (see Appendix). Note that in all cases the compressive stress increases in an asymptotic fashion as the cushion stiffness is made larger. At some value of cushion stiffness in the neighborhood of 100 PSI, the compressive stress "saturates"; further increases in cushion stiffness produce a negligible effect on compressive stress. At the other end of the cushion stiffness range (very soft)

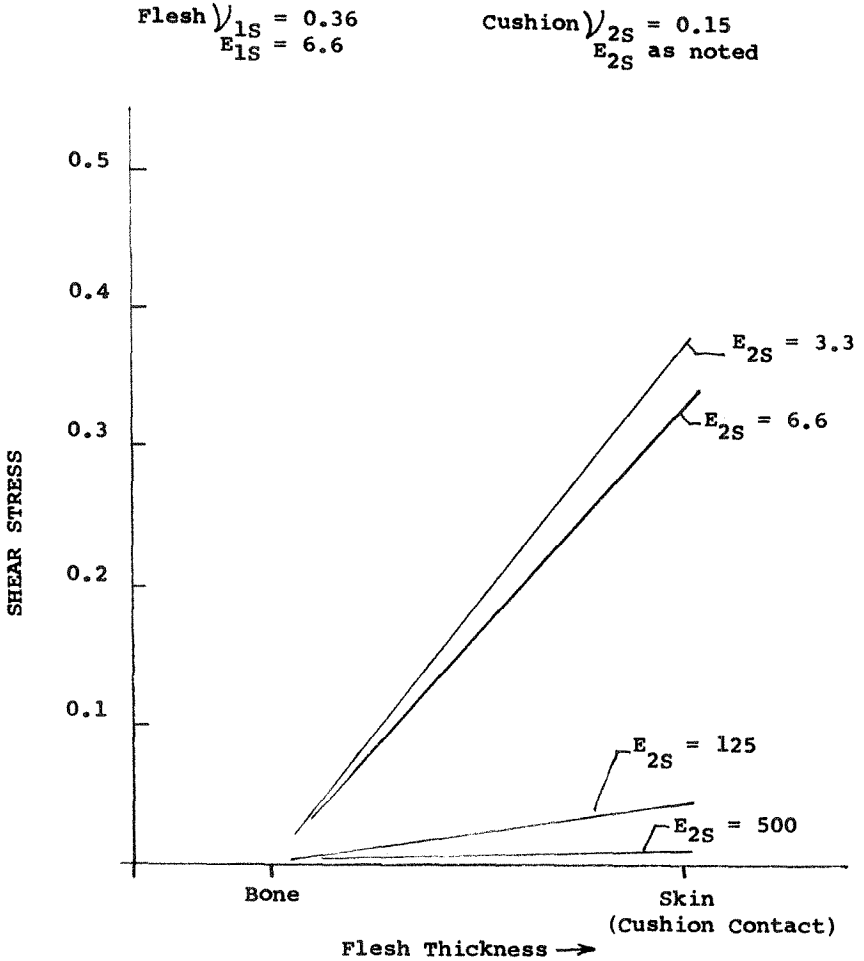

FIGURE 2.—Shear stress. Plotted values are the maximum encountered within the flesh domain of Fig. 1, for Po=20 or an average unit pressure at the bone of 2 PSI.

compressive stress is sensitive to stiffness; a doubling of stiffness produces a significant increase in the compressive stress.

Compressive stress is higher at the bone edge than on the center line and higher in the case of smaller Poisson's ratios as compared to large.

Tension exists immediately beyond the bone edge. The two lower curves (Fig. 4) depict the maximum tension encountered as a function of cushion stiffness. For low values of stiffness, the tensile stress is relatively insensitive to cushion stiffness. As stiffness increases the tension slowly decays, finally becoming negligible when extremely

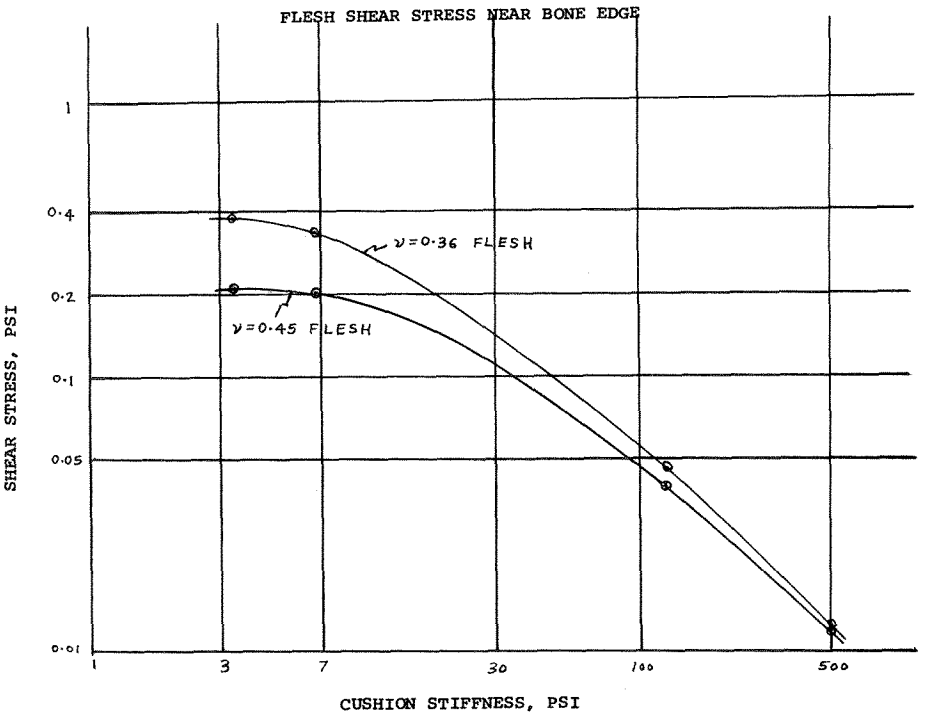

FIGURE 3.—Distribution of flesh shear stress with flesh thickness.

stiff cushions are employed. Tensile stresses are larger in the case of a lower Poisson's ratio.

DISCUSSION

Most practical cushions are quite soft; usually considerably softer than flesh. Given such a soft cushion, of less than 10 PSI stiffness, three forms of flesh stress arise that have significant effects: shear stress near bone edges, tension effects near bone edges, and overall compressive stresses that tend to peak near bone edges. Let us imagine that we are currently employing a soft cushion and wish to reduce the stresses encountered within that flesh contacting the cushion. Is there some benefit to be gained by employing a still softer cushion? Is there any advantage in switching to a stiffer cushion?

From the standpoint of shear stress, there is nothing to be gained in switching to a still softer cushion, if one starts with a soft cushion. (See Figure 2 for stiffness values of less than 10 PSI.) This is also true with respect to tensile stress. (See Figure 4 for stiffness values of less than 10 PSI; lower set of curves.) Where compressive stress values are

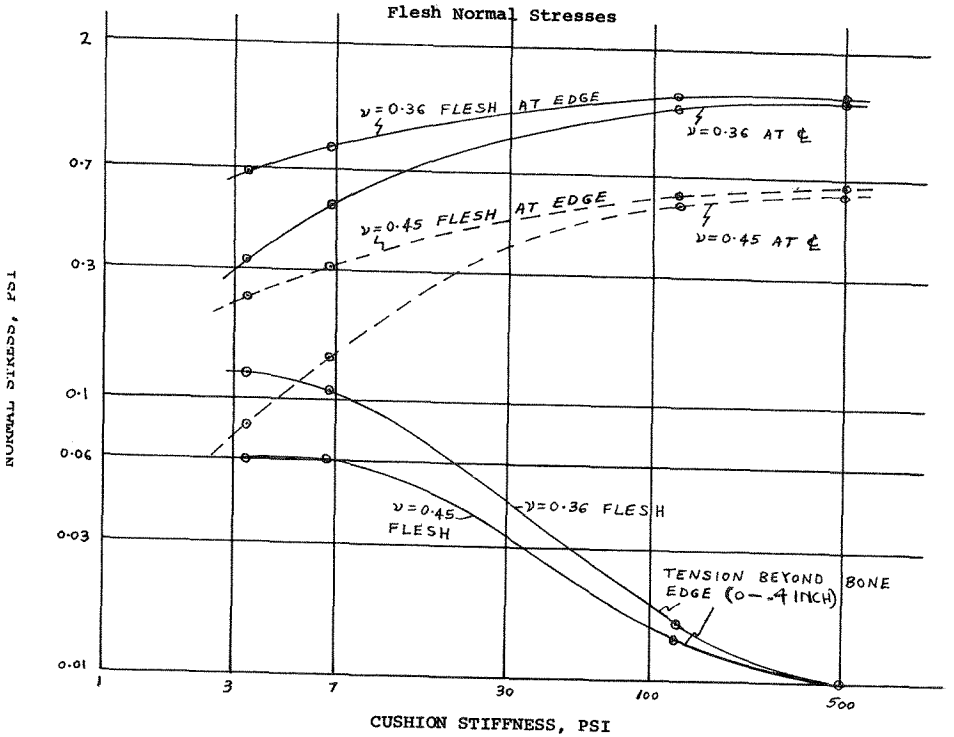

FIGURE 4.—Normal stress. Plotted values are peak values encountered either on the center line (Fig. 1) or in the vicinity of the bone edge, as noted.

concerned there is a gain apparent in the use of a very soft cushion. However, if we utilize the edge stress curve at a Poisson's ratio of 0.45 as being the most realistic and severe of the curve set, it is seen that halving the cushion stiffness will reduce the local compressive stress only 20 percent. While such a gain is real, it is also modest.

One concludes that switching to a still softer cushion from an initial soft cushion can produce only modest gains in one type of stress, local compressive stress. Other active stresses, shear and tension, are either unaffected or actually slightly increased by such a switch. Lacking knowledge of the precise biological effects of each type of stress, we might as a first approximation assume equivalent effects. Then it would appear that the net change in switching from a soft cushion to one still softer is to reduce tissue stress modestly.

As concerns the reverse tendency—switching to a stiffer cushion—the effect is again modest. Shear and tensile values would remain unaffected or decrease slightly, compressive stress values would increase somewhat.

In general, one concludes that variations in cushion stiffness involv-

ing incremental changes of, say, two or three fold in either direction about some soft norm, will produce only modest changes in the stress experienced in the contacting flesh. Mere changes in cushion stiffness do not appear a promising avenue for major reductions in flesh stress.

The distribution of flesh shear stress (Fig. 3) in which maximum values arise near the cushion is intuitively surprising. One anticipates large stress values in proximity to the loading member (bone); the development of large stresses remote from the loading member deserves comment.

Shear stress arises from gradient of compressive deflection. In other words, shear stress reflects the lack of uniformity of the "give" under compressive load. If the compressive deflection were identical everywhere, there would be no shear stress. Where the compressive deflection changes drastically, shear stress is large.

Immediately under the bone the flesh deflection is uniform and the shear stress negligible. It is at the cushion interface that the flesh compressive deflection is both large and uneven. In particular, that section of flesh beneath the bone edge and at the cushion interface experiences the greatest compressive deflection gradient and hence the greatest shear stress (Fig. 4a, appendix).

Photographs taken of a physical model consisting of a flesh substitute (polyvinyl chloride) loaded between a simulated bone and cushion confirm the existence of large flesh strains at the cushion interface. Indeed, still larger shear stress values exist at only one location, the sharp bone corner.

REFERENCES

1. Brand, P.W.: *In* Bedsore Biomechanics. Kenedi, Cowden and Scales, Eds., University Park Press 1976, 19-23.
2. Bennett, L.: Transferring Load to Flesh—State of Effort. Bull. Prosth. Res. 10-22 Fall 1974, 133-143.
3. Vlasov, V.Z. and N.N. Leontev: Beams, Plates and Shells on Elastic Foundations. Moscow 1960. Translated as NASA TT-F-357. Available clearinghouse for Federal Scientific and Technical Information, Springfield, VA. 22151.

ADDENDUM

Some six reviewers have examined the above material; a number of questions have been raised and comments made. What follows is an attempt to list the various issues and provide suitable replies. Hopefully the reader may find some of his own questions reflected here.

1. *Equilibrium Equations*

The equations are but approximations and therefore do not com-

pletely satisfy the equilibrium equations drawn from the theory of elasticity. This limitation is inherent in the Vlasov and Leontev approach. Of course, the final equations do satisfy those equilibrium equations employed in the Vlasov and Leontev procedure.

2. *Equation 14*

One reviewer noted that equation 14 appears to drop out of the derivation. This is true for the reason that the equation is identically satisfied; every term is zero.

3. *Magnitude of q_2*

By definition of the particular loading condition studied, q_2 is zero. Any loading q_1 is independent from q_2 considerations.

4. *Series Terms*

The displacements are expressed as a finite series of which we consider only the first two terms. A question has been raised concerning the loss of accuracy in considering so few terms. We have not conducted an error analysis of the effects of including various numbers of series terms. Such an analysis seems academic when viewed against the background of the numerous gross assumptions (linearity, etc.) made in constructing our model. As we have noted "the results fall somewhere between the qualitative and the quantitative in their predictive power."

5. *Longitudinal Displacement*

The longitudinal displacement (U) is set identically to zero in reflection of the observation that the cushion deflection parallel to a load is far greater than that perpendicular to the load. Such an assumption is standard procedure within the Vlasov and Leontev concept.

6. *Displacement Distribution Functions*

These are chosen as the simplest, capable of yielding coherent results.

7. *Figures 4A and 5A*

These Figures do not provide a scaled portrayal of the deflection characteristics; rather, they represent considerable license on the part of the draftsman. Do not scale these Figures.

8. *Comparison with the Work of Others*

A number of reviewers have suggested a comparison of our results

with the work of others. Unfortunately we know of no comparable analytical or experimental solutions. We have searched the following sources, only to learn in each case that the problem solved was remote from ours:

1. Burmister, D.M., 1956: Stress and Displacement Characteristics of a Two-layer Rigid Base Soil System: Influence Diagrams and Practical Applications. Proc. Highway Res. Board, 35, 773-814. *In* Elastic Solutions for Soil and Rock Mechanics, H.G. Poulos and E.H. Davis, John Wiley and Sons, Inc., New York 113-115, 1974.

2. Fadum, R.E.: Influence Values for Estimating Stresses in Elastic Foundations, 1948. Proc. 2nd Int. Conf. Soil Mechs. Fndn. Engng.; 3:77-84. *In* Elastic Solutions for Soil and Rock Mechanics, H.G. Poulos and E.H. Davis, John Wiley and Sons, Inc., New York, 192, 1974.

3. Fox L.: Computations of Traffic Stresses in a Simple Road Structure, 1948. Proc. 2nd Int. Conf. Soil Mechs. Engng.; 2, 236-246. *In* Elastic Solutions for Soil and Rock Mechanics, H.G. Poulos and E.H. Davis, John Wiley and Sons, Inc., New York; 138-139, 1974.

4. Harr, M.E.: Foundations of Theoretical Soil Mechanics, 1966. McGraw Hill, New York. *In* Elastic Solutions for Soil and Rock Mechanics, H.G. Poulos and E.H. Davis, John Wiley and Sons, Inc., New York, 192, 1974.

5. Harrison, W.J. and C.M. Gerrard: 1972 Elastic Theory Applied to Reinforced Earth, J. Soil Mechs. Fndns. Div., ASCE, 98:(SM12). *In* Elastic Solutions for Soil and Rock Mechanics, H.G. Poulos and E.H. Davis, John Wiley and Sons, Inc., New York, 192, 1974.

6. Milovic, D.M., G. Touzot, and J.P. Tournier: Stresses and Displacements in an Elastic Layer Due to Inclined and Eccentric Load Over a Rigid Strip. Geotechnique, 1970, 20(3):231-252. *In* Elastic Solutions for Soil and Rock Mechanics, H.G. Poulos and E.H. Davis, John Wiley and Sons, Inc., New York, 172-177, 1974.

7. Terzaghi, Karl: Theoretical Soil Mechanics. Fifth Printing, John Wiley and Sons, Inc., New York, 379-382 and 484-485, June, 1948.

8. Tschebotarioff, Gregory P.: Soil Mechanics, Foundations, and Earth Structures. Eighth Printing, McGraw-Hill Book Co., Inc., New York, 215-219, 1958.

9. *"Bone" Contour*

The "bone" employed in our analysis is granted sharp, square corners, a configuration that does not occur in reality. Hence we are dealing with a "worst case"; a more realistic bone model would likely produce lower stresses.

10. *Finite Element Analysis*

Future analytic efforts may well embrace the finite element approach. Many of the inherent limitations of our model can, in princi-

ple, be overcome with this technique. Stipulations of linearity and normal stress values independent of vertical location are not required in sophisticated finite element treatments. It is to be hoped that the rough approximations resulting from our work will eventually be replaced with the more nearly exact solutions determined from finite element analysis.

APPENDIX

Analytical Solution

The treatment below gives the full development of those equations employed in this work. Much of this effort follows directly on the prior work of Vlasov and Leontev (3). However, starting with equation (25) the remaining effort is believed original.

SYMBOLS	NOMENCLATURE
x, y, z	Cartesian axes rotation
$\varepsilon_{xx}, \varepsilon_{yy}$	Normal strains in x & y respectively
τ_{xy}, τ_{yx}	Shear stresses
$\varepsilon_{xy}, \varepsilon_{yx}$	Shear strains
σ_x, σ_y	Normal stresses
$p(x,y), q(x,y)$	Horizontal & Vertical load functions respectively
E, E_s	Modulus of Elasticity of foundation
ν, ν_s	Poisson's ratio
h_1, h_2	Thickness of foundation layers
H	Total composite foundation thickness
$V_1(x), V_2(x)$	Deflection functions of first & second foundation layers respectively

SYMBOLS	NOMENCLATURE
$u(x,y)$, $v(x,y)$	Horizontal & Vertical displacement functions respectively
$U_i(x)$, $V_k(x)$	Generalized displacements in the horizontal & vertical directions respectively
$\phi_i(y)$, $\psi_k(y)$	Functions of distribution of the displacements in x & y directions respectively
u_j, v_h	Virtual displacements in the x & y directions respectively for $U_j = 1$, $V_h = 1$
$a_{ij}, b_{ij}, c_{jk}, t_{jk}, r_{hk}, s_{hk}, c_{hi}, t_{hi}$	Integrals of functions of distribution of the displacements in x & y
$F(x)$	Function in x
L	Half length of beam
s_h	Shear force
C_0	Displacement under beam in first layer
$C_1, C_2, C_3, C_4, C_1', C_2'$	Constants
P_0	Concentrated vertical load
k_1, k_2, t_1, t_2	Foundation parameters
Ch	Cosh function
Sh	Sinh function
Q_A, Q_B	Vertical reactions at beam ends
q^*	Uniform reaction beneath beam in first layer of foundation
e	2.7183

The following assumptions are made in the derivation:

(1) The displacements in the cushion and flesh and the corresponding strains are small.

(2) The cushion and flesh materials are linearly elastic and isotropic.

(3) The horizontal displacements are negligible.

(4) The bone is infinitely rigid.

(5) The normal stresses in the cushion layers are assumed to be uniform over the cross section.

(6) The loading is symmetrical.

(7) There is no relative movement of one layer with respect to the other in the horizontal direction.

(8) The uniform reaction beneath the bone is a constant and depends upon the deflection and the modulus of the elastic foundation.

(9) The cushions are non-visco elastic and homogeneous.

(10) Poisson's ratio is a constant for the cushion and for the flesh. (Identical values are not assumed.)

(11) There is no cover on the cushion or skin on the flesh.

We are considering problems of plane stress in two dimensions, x & y, and thus the displacements, strains and stresses are functions of x & y only.

Let the unknown displacements be $u(x,y)$ & $v(x,y)$ which are determined from the conditions of equilibrium of the elastic system.

Let the x direction be called longitudinal and the y direction transverse. Hence the corresponding longitudinal and transverse displacements are $u(x,y)$ & $v(x,y)$ respectively. (Fig 1a)

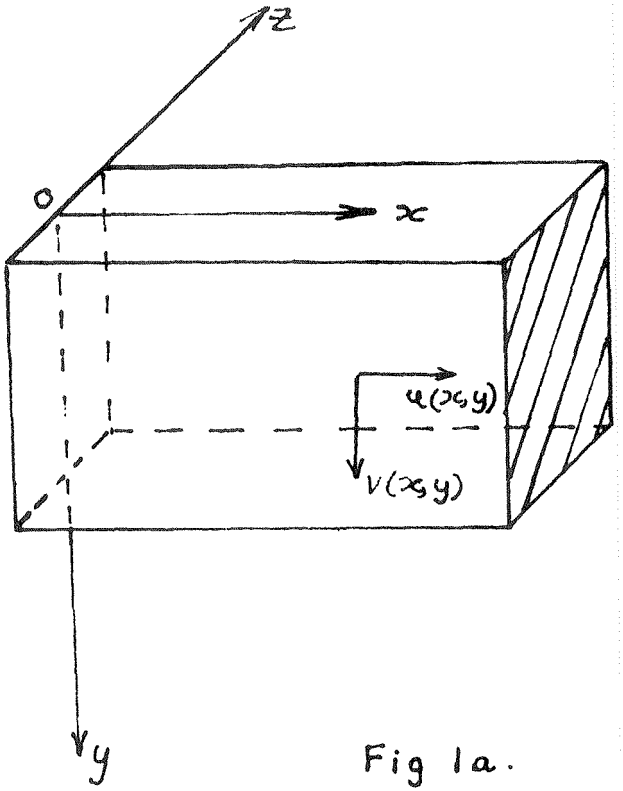

Fig 1a.

The unknown functions $u(x,y)$ & $v(x,y)$ are expanded in a finite series.

Thus, $$u(x,y) = \sum_{i=1}^{m} U_i(x)\,\phi_i(y) \qquad (i = 1, 2, 3, \ldots m) \quad (1) \quad (1)$$

And $$v(x,y) = \sum_{k=1}^{n} V_k(x)\,\psi_k(y) \qquad (k = 1, 2, 3, \ldots n) \quad (2) \quad (2)$$

The functions $\phi_i(y)$ & $\psi_k(y)$ are assumed to be known and the functions $U_i(x)$, $V_k(x)$ to be unknown and having the dimension of length. Here, the functions $\phi_i(y)$ & $\psi_k(y)$ give the distributions of the displacements over the cross section x = const.

The functions $U_i(x)$ & $V_k(x)$ are obtained from equilibrium conditions which are derived by equating to zero the total work of all internal and external forces acting on a strip shown in Fig. 2a over any virtual displacement.

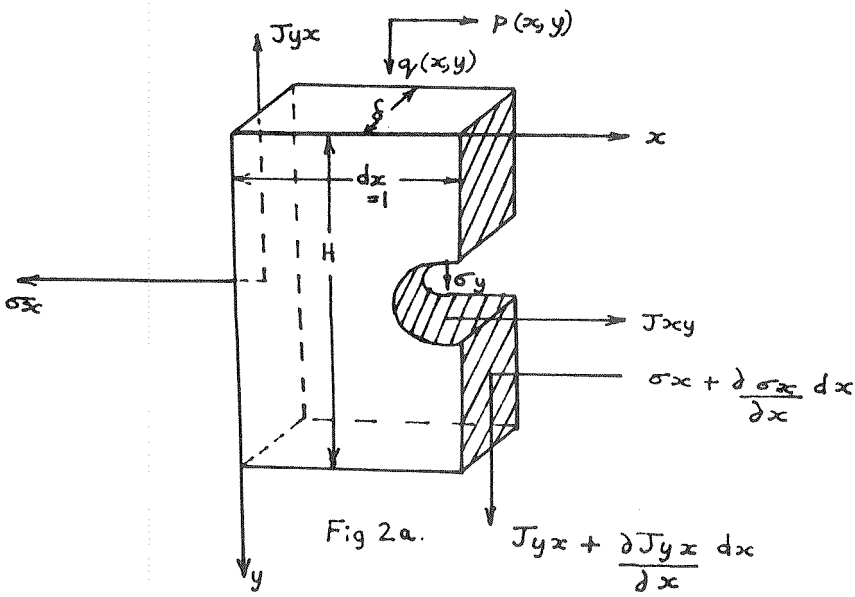

Fig 2a.

$$\tau_{xy} \frac{\partial \phi_j(y)}{\partial y} = \tau_{xy} \varepsilon_{xy} \qquad \text{as} \qquad \varepsilon_{xy} = \frac{\partial u_j}{\partial y} + \frac{\partial v_h}{\partial x}$$

and $u_j = \phi_j(y)$ for $U_j(x) = 1$, $v_h = \psi_h(y)$ for $V_h(x) = 1$

where

$\phi_j(y)$ = displacement in x direction

$\psi_h(y)$ = displacement in y direction

ε_{xy} = shear strain $= \dfrac{\partial \phi_j(y)}{\partial y}$, $\varepsilon_{yy} = \dfrac{\partial v_h}{\partial y} = \psi_h'(y) = \dfrac{\partial \psi_h(y)}{\partial y}$

ε_{yy} = normal strain

The work done by all the external and internal forces over the strip given a virtual displacement is shown by the following expressions 3 and 4.

$$\int_0^H \sigma_x \phi_j \delta dy - \int_0^H - \tau_{xy} \frac{\partial \phi_j(y)}{\partial y} \delta dy - \int_0^H \left(\sigma_x + \frac{\partial \sigma_x}{\partial x} dx\right) \phi_j \delta dy$$

$$- \int_0^H p(x,y) \phi_j dy = 0 \qquad (3)$$

$$\int_0^H \tau_{yx} \psi_h \delta dy - \int_0^H \left(\tau_{yx} + \frac{\partial \tau_{yx}}{\partial x} dx\right) \psi_h \delta dy + \int_0^H q(x,y) \psi_h dy$$

$$- \int_0^H - \sigma_y \varepsilon_{yy} \delta dy = 0 \qquad (4) \qquad \varepsilon_{yy} = \frac{\partial \psi_h(y)}{\partial y} = \psi_h'(y)$$

Equation 3 reduces to:

$$\int \frac{\partial \sigma_x}{\partial x} \phi_j dF - \int \tau_{xy} \phi_j' dF + \int p(x,y) \phi_j dy = 0 \qquad (5)$$

$j = 1, 2, 3, \ldots m$

Equation 4 reduces to:

$$\int \frac{\partial \tau_{yx}}{\partial x} \psi_h dF - \int \sigma_y \psi_h' dF + \int q(x,y) \psi_h dy = 0 \qquad (6)$$

$h = 1, 2, 3, \ldots n$

$dF = \delta dy$, δ = bone width

now, $$\sigma_x = \frac{E}{1-\nu^2}(\varepsilon_{xx} + \nu \varepsilon_{yy}) \qquad (7)$$

$$\sigma_y = \frac{E}{1-\nu^2}(\varepsilon_{yy} + \nu\,\varepsilon_{xx}) \quad (8), \qquad \tau_{xy} = \frac{E}{2(1+\nu)}\,\varepsilon_{xy} = \tau_{yx} \quad (9)$$

$$\varepsilon_{xx} = \frac{\partial u}{\partial x}, \qquad \varepsilon_{yy} = \frac{\partial v}{\partial y}, \qquad \varepsilon_{xy} = \frac{\partial u}{\partial y} + \frac{\partial v}{\partial x} \quad (10)$$

Using equations 10 & 1 & 2 in eqs. 7, 8, & 9

$$\therefore \varepsilon_{xx} = \frac{\partial u}{\partial x} = \sum_{i=1}^{m} U_i'(x)\,\phi_i(y), \qquad \therefore \varepsilon_{yy} = \frac{\partial v}{\partial y} = \sum_{k=1}^{n} V_k(x)\,\psi_k'(y)$$

$$\therefore \varepsilon_{xy} = \frac{\partial u}{\partial y} + \frac{\partial v}{\partial x} = \sum_{i=1}^{m} U_i(x)\,\phi_i'(y) + \sum_{k=1}^{n} V_k'(x)\,\psi_k(y)$$

$$\therefore \sigma_x = \frac{E}{1-\nu^2}\left(\sum_{i=1}^{m} U_i'\phi_i + \nu \sum_{k=1}^{n} V_k\,\psi_k'\right) \quad (11)$$

$$\therefore \sigma_y = \frac{E}{1-\nu^2}\left(\sum_{k=1}^{n} V_k\,\psi_k' + \nu \sum_{i=1}^{m} U_i'\phi_i\right) \quad (12)$$

$$\therefore \tau_{xy} = \tau_{yx} = \frac{E}{2(1+\nu)}\left(\sum_{i=1}^{m} U_i\,\phi_i' + \sum_{k=1}^{n} V_k'\,\psi_k\right) \quad (13)$$

Using eqs. 11, 12, 13 in eqs. 5, the following equation is obtained:

$$\sum_{i=1}^{m} a_{ij}U_i'' - \frac{(1-\nu)}{2}\sum_{i=1}^{m} b_{ij}U_i + \sum_{k=1}^{n}\left(\nu t_{jk} - \frac{(1-\nu)}{2}c_{jk}\right)V_k' + \frac{(1-\nu^2)}{E}p_j = 0 \quad (14)$$

Using the same procedure in 6, we obtain:

$$-\sum_{i=1}^{m}\left(\nu t_{hi} - \frac{(1-\nu)}{2}c_{hi}\right)U_i' + \frac{1-\nu}{2}\sum_{k=1}^{n} r_{hk}V_k'' - \sum_{k=1}^{n} s_{hk}V_k + \frac{1-\nu^2}{E}q_h = 0 \quad (15)$$

In the above equation a_{ij}, b_{ij}, c_{jk}, t_{jk}, t_{hi}, c_{hi}, r_{hk} & s_{hk} is given by:

$$a_{ij} = \int \phi_j\,\phi_i\,dF = a_{ji}, \quad r_{hk} = \int \psi_h\,\psi_k\,dF = r_{kh}, \quad b_{ij} = \int \phi_j'\,\phi_i'\,dF = b_{ji}$$

$$s_{hk} = \int \psi_h'\,\psi_k'\,dF = s_{kh}, \quad c_{jk} = \int \phi_j'\,\psi_k'\,dF, \quad c_{hi} = \int \psi_h\,\phi_i'\,dF,$$

$$t_{jk} = \int \phi_j\,\psi_k'\,dF \qquad t_{hi} = \int \psi_h'\,\phi_i\,dF \qquad \text{also,} \qquad p_j = \int p(x,y)\,\phi_j\,dy,$$

$$q_h = \int q(x,y)\,\psi_h\,dy$$

In the case of plane strains, the following have to be substituted for E & ν in equations 14 & 15, and in 7, 8, 9.

$$E_o = \frac{E_s}{1-\nu_s^2} \qquad \nu_o = \frac{\nu_s}{1-\nu_s}$$

E_s & ν_s are the modulus of elasticity & Poisson's ratio for the foundation materials.

From the differential equations 14 & 15, $U_i(x)$ & $V_K(x)$ can be determined. Thus the displacements of the elastic foundation $u(x,y)$ & $V(x,y)$ can be found from 1 & 2 & the stresses $\sigma_x, \sigma_y, \tau_{xy}$ from 7, 8 & 9. The accuracy of the solution can be increased by increasing the number of terms in eqs 1 & 2, but this increases the order of the differential equations 14 & 15 thus making them more difficult to solve.

With the general equations now in hand, we turn to the solution of the particular two layered material problem.

Consider an elastic material of thickness $H = h_1 + h_2$, undergoing plane deformations. The 2 layers have different moduli of elasticity and Poisson's ratios.

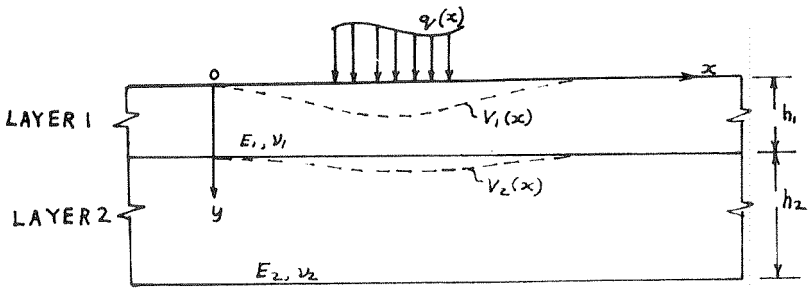

Fig. 3a.

$\therefore\ u(x,y) = 0$ also $v(x,y) = V_1(x)\,\psi_1(y) + V_2(x)\,\psi_2(y)$

$\psi_1(y)$ & $\psi_2(y)$ are functions of the transverse distribution of the displacements.
The functions $\psi_1(y)$, $\psi_2(y)$ are chosen according to the nature of the problem. If we assume that the normal stresses are not related to depth, then

at $0 \leq y \leq h_1$ $\quad \psi_1 = \dfrac{h_1 - y}{h_1}$, $\quad \psi_2 = \dfrac{y}{h_1}$

at $h_1 \leq y \leq H$ $\quad \psi_1 = 0$, $\quad \psi_2 = \dfrac{H - y}{h_2}$

Using Eq. 15 & substituting

$$u(x,y) = 0 \ , \ U_i(x) = 0 \ , \ q_2 = 0$$

$$\therefore \frac{1-\nu_1}{2}\left(r_{11}V_1'' + r_{12}V_2''\right) - \left(s_{11}V_1 + s_{12}V_2\right) + \frac{(1-\nu_1^2)}{E_1}q_1 = 0 \qquad (16)$$

for $h = 1$

$$\therefore \frac{E_1 r_{12}}{2(1-\nu_1)}V_1'' + \left[\frac{E_1}{2(1+\nu_1)}r_{22} + \frac{E_2}{2(1+\nu_2)}r_{22}^*\right]V_2'' - \frac{E_1}{1-\nu_1^2}s_{21}V_1$$

$$- \left[\frac{E_1}{1-\nu_1^2}s_{22} + \frac{E_2}{1-\nu_2^2}s_{22}^*\right]V_2 = 0 \qquad \text{for } h = 2 \qquad (17)$$

$$\left.\begin{aligned}
&\text{Here, } r_{11} = \int_0^{h_1}\psi_1^2\,dF = \frac{\delta h_1}{3}, \quad r_{12} = \int_0^{h_1}\psi_1\psi_2\,dF = \frac{\delta h_1}{6}, \quad r_{22} = \int_0^{h_1}\psi_2^2\,dF = \frac{\delta h_1}{3} \\
&r_{22}^* = \int_{h_1}^{H}\psi_2^2\,dF = \frac{\delta h_2}{3}, \quad s_{11} = \int_0^{h_1}(\psi_1')^2\,dF = \frac{\delta}{h_1}, \quad s_{12} = \int_0^{h_1}\psi_1'\psi_2'\,dF = \frac{-\delta}{h_1} \\
&s_{22} = \int_0^{h_1}(\psi_2')^2\,dF = \frac{\delta}{h_1}, \quad s_{22} = \int_{h_1}^{H}(\psi_2')^2\,dF = \frac{\delta}{h_2}
\end{aligned}\right\} \ (18)$$

$$E_1 = \frac{E_{1s}}{1-\nu_{1s}^2}, \quad \nu_1 = \frac{\nu_{1s}}{1-\nu_{1s}}, \quad E_2 = \frac{E_{2s}}{1-\nu_{2s}^2}, \quad \nu_2 = \frac{\nu_{2s}}{1-\nu_{2s}}$$

Where $E_{1s}, E_{2s}, \nu_{1s}, \nu_{2s}$ are the moduli of elasticity & Poisson's ratios of the first & second layers respectively.
Using eqs. 18, 16 & 17 reduce to:

$$2t_1V_1'' - k_1V_1 + t_1V_2'' + k_1V_2 + q = 0 \qquad (19)$$

$$t_1V_1'' + 2(t_1+t_2)V_2'' + k_1V_1 - (k_1+k_2)V_2 = 0 \qquad (20)$$

where $t_1 = \dfrac{E_1 h_1 \delta}{12(1+\nu_1)}$, $k_1 = \dfrac{E_1\delta}{h_1(1-\nu_1^2)}$, $t_2 = \dfrac{E_2 h_2 \delta}{12(1+\nu_2)}$, $k_2 = \dfrac{E_2\delta}{h_2(1-\nu_2^2)}$

The coefficients k_1 & k_2 determine the compressive strains of the upper & lower layers respectively, while t_1 & t_2 are the parameters defining shearing strains in the upper & lower layers respectively.

Eqs 19 & 20 are reduced to an identity by introducing a function $F(x)$ such that:

$$V_1(x) = (k_1+k_2)F(x) - 2(t_1+t_2)F''(x) \quad , \quad V_2(x) = k_1 F(x) + t_1 F''(x) \qquad (21)$$

Substituting these in eq 19,

$$t_1(3t_1+4t_2)F^{4}(x) - 2(3t_1k_1+t_1k_2+t_2k_1)F''(x) + k_1k_2F(x) = q(x) \qquad (22)$$

The shear forces in layers one & two are

$$S_1(x) = \int_0^H J_{yx}\,\psi_1(y)\,dF \quad , \quad S_2(x) = \int_0^H J_{yx}\,\psi_2(y)\,dF \text{ respectively}$$

$$J_{yx} = \frac{E}{2(1+\nu)}\left[V_1'(x)\,\psi_1(y) + V_2'(x)\,\psi_2(y)\right]$$

at $0 \le y \le h_1$, $\quad J_{yx} = \dfrac{E_1}{2(1+\nu_1)}\left[\left(\dfrac{h_1-y}{h_1}\right)V_1'(x) + V_2'(x)\left(\dfrac{y}{h_1}\right)\right]$

at $h_1 \le y \le H$, $\quad J_{yx} = \dfrac{E_2}{2(1+\nu_2)}\left[\left(\dfrac{H-y}{h_2}\right)V_2'(x)\right]$

$$\therefore S_1(x) = t_1(2V_1'(x) + V_2'(x)) \qquad (23) \qquad S_2(x) = t_1V_1'(x) + 2(t_1+t_2)V_2'(x) \qquad (24)$$

Consider a rigid bone of length $2L$ width δ bearing on a layer of flesh and in turn pressing on a cushion.
$\psi(y)$ & $\psi_2(y)$ are assumed to vary linearly. It is assumed that the loading is symmetrical i.e. a concentrated force acts at the center of the beam.
Since the beam is rigid & loading is symmetrical, the deflection beneath the beam is a constant.

$$\therefore V_1(x) = C_0 \quad \text{in zone III}$$

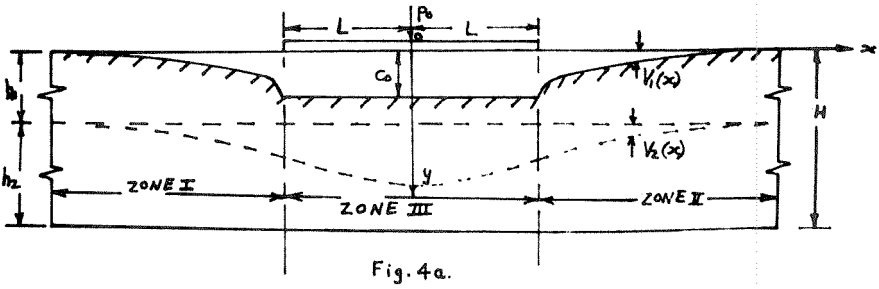

Fig. 4a.

Using eq 21:

$$V_1(x) = (k_1+k_2)\,F(x) - 2(t_1+t_2)\,F''(x) = C_0$$

∴ The general solution is:

$$F(x) = C_1' \,Ch\,\beta x + C_2' \,Sh\,\beta x + \frac{C_0}{k_1+k_2} \quad (25) \quad \text{where} \quad \beta = \sqrt{\frac{k_1+k_2}{2(t_1+t_2)}}$$

Solving eq 2 with $q(x) = 0$,

$$F(x) = C_1 e^{\ell x} + C_2 e^{-\ell x} + C_3 e^{mx} + C_4 e^{-mx} \quad \text{where} \quad \ell^2 = \frac{b+\sqrt{b^2-4ac}}{2a},$$

$$m^2 = \frac{b-\sqrt{b^2-4ac}}{2a}, \quad a = t_1(3t_1+4t_2), \quad b = 2(3t_1k_1+t_1k_2+t_2k_1), \quad c = k_1k_2$$

$C_1 = C_3 = 0$ for V_1 & $V_2 = 0$ as $x \to \infty$

$$\therefore F(x) = C_2 e^{-\ell x} + C_4 e^{-mx} \quad (26) \quad \therefore F''(x) = \ell^2 C_2 e^{-\ell x} + m^2 C_4 e^{-mx}$$

∴ From eq 21, $V_1^{I}(x) = C_2\{(k_1+k_2) - 2(t_1+t_2)\ell^2\}e^{\ell(x+L)} + C_4\{(k_1+k_2) - 2(t_1+t_2)m^2\}e^{m(x+L)}$ (27)

for $x \leq -L$

& $V_1^{II}(x) = C_2\{(k_1+k_2) - 2(t_1+t_2)\ell^2\}e^{-\ell(x-L)} + C_4\{(k_1+k_2) - 2(t_1+t_2)m^2\}e^{-m(x-L)}$ (28)

for $x \geq L$

$V_1^{III}(x) = C_0$ by definition

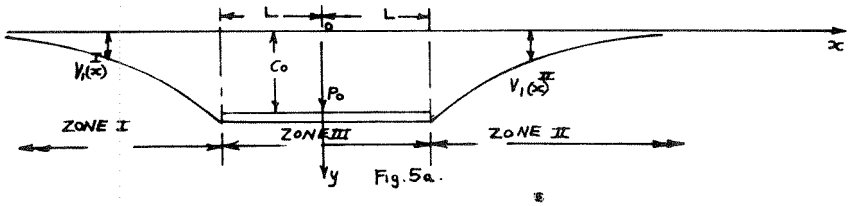

Fig.5a.

From Eq 21,

$$V_2^{I}(x) = C_2 e^{\ell(x+L)}(k_1+t_1\ell^2) + C_4 e^{m(x+L)}(k_1+t_1m^2) \quad (29) \quad \text{for } x \leq -L \text{ ZONE I}$$

$$\& \; V_2^{II}(x) = C_2 e^{-\ell(x-L)}(k_1+t_1\ell^2) + C_4 e^{-m(x+L)}(k_1+t_1m^2) \quad (30) \quad \text{for } x \geq L \text{ ZONE II}$$

Using eq 25 in 21,

$$V_2^{III}(x) = -k_1C_1'Ch\beta x - t_1C_1'\beta^2 Ch\beta x + \frac{k_1C_0}{k_1+k_2} \quad (31) \quad C_2' = 0 \text{ as } V_2^{III}(x)_{x=L} = V_2^{III}(x)_{x=-L}$$

C_1' is assumed to be negative.

From eq 23, shear force in ZONE III is

$$S_{1b}^{III} = -t_1\{k_1C_1'\beta Sh\beta L + t_1C_1'\beta^3 Sh\beta L\} \quad (32) \quad x = -L$$

Shear for ZONE I is:

$$S_1^{I} = t_1\{2C_2\ell[(k_1+k_2) - 2(t_1+t_2)\ell^2] + 2C_4 m[(k_1+k_2) - 2(t_1+t_2)m^2] + (k_1+t_1\ell^2)C_2\ell + (k_1+t_1m^2)C_4 m\} \quad (33) \quad x=-L$$

Reaction at bone end x = -L is:

$$Q_A = S_1^{I} - S_{1b}^{III} = Q_B$$

$$= t_1\{2C_2\ell[(k_1+k_2) - 2(t_1+t_2)\ell^2] + 2C_4 m[(k_1+k_2) - 2(t_1+t_2)m^2] + (k_1+t_1\ell^2)C_2\ell + (k_1+t_1m^2)C_4 m - t_1\{k_1C_1'\beta Sh\beta L + t_1C_1'\beta^3 Sh\beta L\} \quad (34)$$

∴ by principal of equilibrium of forces,

$$Q_A + Q_B + q \times 2L = P_0$$

q is the uniform reaction under the beam per unit length of beam

Let $q = k_1C_0$

We are assuming this reaction to be a constant throughout the length of the beam.

$$\therefore 2Q_A = P_0 - 2Lk_1C_0$$

$$\therefore Q_A = \frac{P_0 - 2Lk_1C_0}{2} \quad (35)$$

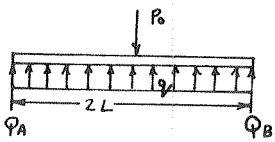

$V_2^{I}(x) = V_2^{III}(x)$ at $x=-L$, $V_2^{II}(x) = V_2^{III}(x)$ at $x=L$ Fig. 6a.

$$\therefore C_2(k_1+t_1\ell^2) + C_4(k_1+t_1m^2) = \frac{k_1C_0}{k_1+k_2} - k_1C_1'Ch\beta L - t_1C_1'\beta^2 Ch\beta L \quad (36)$$

$S_2^{I} = S_2^{III}$ at $x=-L$

Using eqs 24, 27, 29, 31, $V_1'^{III} = 0$

$$\{C_2\ell(k_1+t_1\ell^2) + C_4m(k_1+t_1m^2)\}2(t_1+t_2) + t_1\{C_2\ell[(k_1+k_2) - 2(t_1+t_2)\ell^2] + C_4m[(k_1+k_2) - 2(t_1+t_2)m^2]\} = 2(t_1+t_2)(\beta k_1C_1'Sh\beta L + t_1C_1'\beta^3 Sh\beta L) \quad (37)$$

$$V_2'^{III}(x)_{x=-L} = V_2'^{I}(x)_{x=-L}$$

$$\therefore k_1C_1'\beta Sh\beta L + t_1C_1'\beta^3 Sh\beta L = C_2\ell(k_1+t_1\ell^2) + C_4m(k_1+t_1m^2) \quad (38)$$

The constants C_0, C_2, C_4 & C_1 are evaluated using eqs. 35, 36, 37, & 38

Hence the stresses in the flesh is obtained by using eqs: 39, 40, 41, & 42.

$$\sigma_y = \frac{E_{15}}{1-\nu_{15}^2}\left[\frac{-C_0}{h_1} + \frac{1}{h_1}\left\{\frac{k_1C_0}{k_1+k_2} - k_1C_1'Ch\beta x - t_1C_1'\beta^2 Ch\beta x\right\}\right] \quad [39]$$

$$0 \leq x \leq L$$

$$J_{xy} = \frac{E_{1s}}{2(1+\nu_{1s})} \times \frac{y}{h_1}\left[-k_1 C_1' \beta \, Sh\beta x \; - \; t_1 C_1' \beta^3 \, Sh\beta x\right] \qquad 0 \leq x \leq L \qquad [40]$$

$$\sigma_y = \frac{E_{1s}}{1-\nu_{1s}^2}\left[\frac{-1}{h_1}\left\{C_2 e^{-\ell(x-L)}\left\{(k_1+k_2) - 2(t_1+t_2)\ell^2\right\} + C_4 e^{-m(x-L)}\left\{(k_1+k_2) - 2(t_1+t_2)m^2\right\}\right\}\right.$$

$$\left. + \frac{1}{h_1}\left\{C_2 e^{-\ell(x-L)}(k_1+t_1\ell^2) + C_4 e^{-m(x-L)}(k_1+t_1 m^2)\right\}\right], \; x \geq L \qquad [41]$$

$$J_{xy} = \frac{E_{1s}}{2(1+\nu_{1s})}\left[\frac{h_1-y}{h_1}\left\{C_2 \ell e^{-\ell(x-L)}\left\{(k_1+k_2) - 2(t_1+t_2)\ell^2\right\}\right.\right.$$

$$\left. + C_4 m e^{-m(x-L)}\left\{(k_1+k_2) - 2(t_1+t_2)m^2\right\}\right\}$$

$$\left. + \frac{y}{h_1}\left\{C_2 e^{-\ell(x-L)}\ell(k_1+t_1\ell^2) + C_4 e^{-m(x-L)} m(k_1+t_1 m^2)\right\}\right], \; x \geq L \qquad [42]$$

The stress acting in the y direction is σ_y. This is obtained from equations /39/ and /41/.

The solution of eqs. /39/ through /42/ was achieved in numerical form with an unsophisticated hand calculator (HP45). The results, for those conditions given in Fig. 1, are shown in Figs. 2, 3, and 4.