Veterans Administration

Journal of Rehabilitation Research and Development Vol. 24 No. 3
Pages 75–80

technical note

Preliminary testing of a dual-channel electrical stimulator for correction of gait*

UROŠ BOGATAJ,** MATIJA MALEŽIČ, DUŠAN FILIPIČ
J. Stefan Institute, E. Kardelj University, Ljubljana, Yugoslavia

Abstract—A dual-channel orthotic electrical stimulator was designed for daily use at home by plegic and paretic patients who had completed a hospital rehabilitation program. With two independent channels, two muscle groups can be stimulated in chosen sequences. A microcomputer accomodates the stimulation sequences to the gait cadence of the patient for the stance and swing phase separately.
DOI 10.1682/JRRD.1987.07.0075

INTRODUCTION

Hemiplegia is one of the typical diseases of the modern world. In developed countries this disease affects two to three people out of a thousand. Usually it occurs as a consequence of a cerebrovascular insult in all age groups; however, it is more common in middle aged and elderly people. Besides this, there is another large population of those with craniocerebral trauma as a consequence of accidents at work, in traffic, etc. In both groups, there are similar dysfunctions of locomotion. These patients have unaffected muscles, but their innervation from the central nervous system is impaired. The upper motor neuron lesions indicate the use of functional electrical stimulation (1,20). There are some reports on development of laboratory-oriented dual-channel devices (8,13), and recently some of them have appeared on the market (Respond II, Logics 712, Logix 720). These are cyclic stimulators that are convenient for therapy in rehabilitation institutions but less applicable to gait for everyday home use. None of the stimulators allow free setting of stimulation sequences, and this diminishes the number of muscles to which the stimulator can be applied. The period of cycles in all cases is constant, as it was preset, which means a constant walking speed if the stimulator is used for the correction of gait.

Background and Indications

Neuromuscular electrical stimulation has been a part of training programs in the rehabilitation of plegic and paretic patients for more than 20 years. Numerous stimulators have been designed for the surface stimulation of gait, from the simple single-channel to very sophisticated multichannel units. But only a few devices are convenient enough for home use, and in most cases they are single-channel peroneal stimulators for ankle dorsal flexion. These do improve and ease the patient's gait (3,5,7,12,15,18,19,21), but are more convenient for patients with less severe impairments.

In the last few years multichannel electrical stimulation has been applied in severely involved patients who could hardly walk or could not walk at all without considerable help from a physiotherapist (11,16,17). It has been shown that these patients

*This work was supported by the V.L. Smith Foundation for Restorative Neurology, Houston, Texas; by Research Grant 23-P-59231/F from the National Institute of Handicapped Research, Department of Education, Washington, D.C.; and by Research Grant C2-0123/106 from Research Community of Slovenia, Ljubljana, Yugoslavia.
**Address correspondence to: Uroš Bogataj, J. Stefan Institute, Jamova 39, 61111 Ljubljana, Yugoslavia

have been able to walk after 2 to 3 weeks of therapy with stimulation, using a crutch and some assistance from a physiotherapist (2,9). After finishing therapy, such patients would in most cases need a two-channel device for the stimulation of the peroneal nerve or pretibial muscle group for ankle dorsal flexion, and one of the following muscle groups: quadriceps muscle for knee extension, hamstring muscles for knee flexion, or gluteus maximus muscle for the hip extension.

There is also a large group of patients who can walk, but have considerable problems with insufficient extension, or with hyperextension of the knee during the stance phase, or with insufficient extension of the knee during the swing phase. These patients also are candidates for the dual-channel stimulator as an orthotic aid. On the other hand, two to three channels of surface stimulation represent an optimal compromise between the correction of gait and what the patient can use unaided (10).

Requirements

According to our experience with multichannel electrical stimulation, a two-channel orthotic stimulator should have two galvanically separated channels, with 0-50 mA charge-balanced current stimulation pulses. The device should be as small as possible, and it should be easy to make independent settings of the stimulation sequences for both channels in stance and swing phase. The duration of each stimulation sequence should adapt to the cadence of the patient's gait. The sequences should be triggered optionally by left or right heel-switch for each channel. When two or three channels are needed, there must be a possibility of interconnection of two devices. (Cyclic triggering of the stimulation sequences is also required for muscle training and for use in the selection of stimulation sites.)

Realization

While developing the main concept of the hardware of the stimulator, we needed to satisfy two contradictory requirements: the stimulator should be as small as possible so that it would not disturb the patient, and the stimulation sequences should adapt to the gait cadence of the patient. The accomplishment of this algorithm demanded a large number of logic elements with considerable space requirements. The "small-as-possible" alternative was the microcomputer. We chose the Motorola single-chip EPROM microcomputer (MEK1468705G1L2), whose architecture is very convenient for our application. Besides the standard microprocessor registers, there are 32 I/O ports. Twenty-four of them were used for testing the chosen stimulation sequences: two for testing the choice of triggering, two for testing the heel switches, two for control of output stages, and one for choosing cyclic triggering. Using the internal timer-counter, the microcomputer generates the stimulation pulses, and controls the output stages directly through the galvanical separation as shown in **Figure 1**.

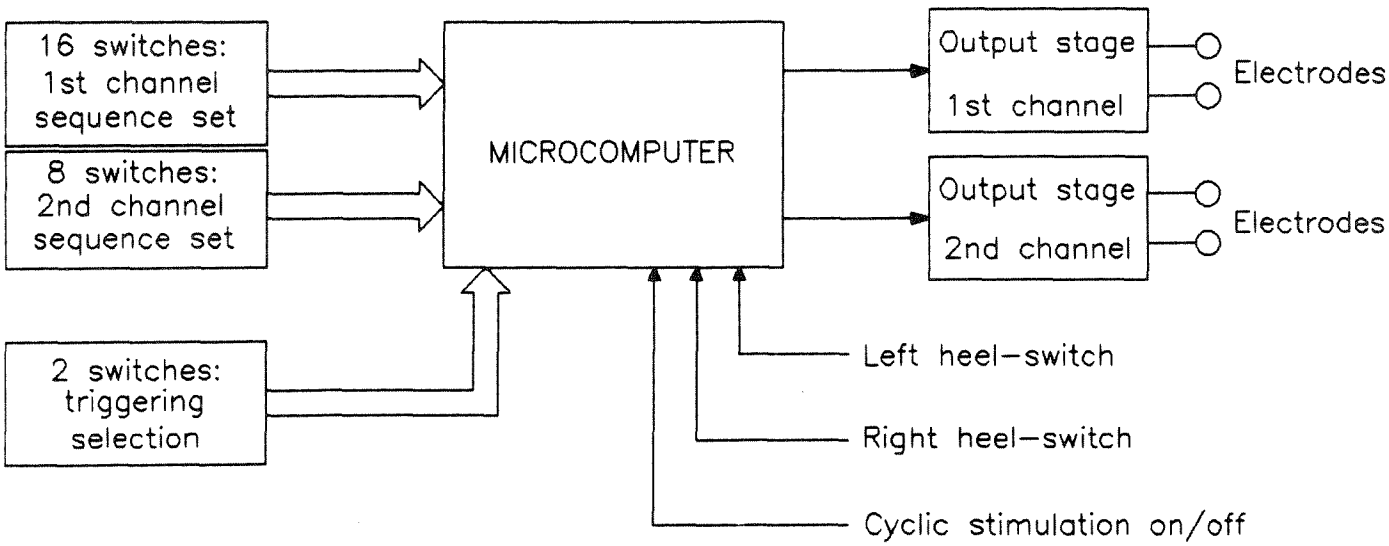

Figure 1.
Block diagram of the dual-channel stimulator.

For normal setting of the stimulation sequence with 8 switches for each phase, 32 switches and therefore 32 I/O lines would be needed for both channels, but the number of switches was reduced to 24 due to the lack of I/O ports. Multiplexion was not used in order to save space. The first channel is represented with eight switches for the stance and with eight switches for the swing phase. When a switch is on, the stimulation is on in the corresponding stance or swing time increment. For example, the stimulation which starts after 5/8 of stance after heel-contact and ends after 6/8 of the next swing after lifting of the heel, requires the following position of the switches:

(○ – switch off, ● – switch on)

	stance	swing	
1st channel:	○○○○○●●●	●●●●●●○○	[1]

The stimulation sequence for the second channel is set in coded form with the remaining 8 switches. The duration of stimulation is determined by the binary value of the left 4 switches, while the delay of stimulation after heel-contact is determined by the binary value of the right 4 switches. The above example for the first channel has the duration of 9 (binary 1001) and delay of 5 (binary 0101) increments. This sequence requires the following setting of switches in the second channel:

	duration	delay	
2nd channel:	●○○●	○●○●	[2]

The stimulator can operate cyclically, to provide the positioning of stimulating electrodes or to exercise the muscles. The cycle can be set by pressing its pushbutton for the desired period. The cycle is set when the pushbutton is released. The stimulation repeats in the sequences set by the sequence switches for each channel until a new cycle is set, or until the cyclic stimulation is switched off. The cycle has to be reset every time, when the cyclic stimulation is switched on. Its maximal duration is 10 seconds.

The stimulator is powered by four standard AA battery cells, which are sufficient for 20 hours of operation with maximal power dissipation. One battery pack on average lasts 40 to 50 hours when used during gait in the everyday environment of the patient. Rechargable Ni-Cd cells can also be used.

Software is a crucial part of the stimulator, due to its hardware concept (shown in **Figure 1**) and provides a large flexibility of functions. The software is stored in EPROM and can easily be changed or modified when functional changes in the stimulator are needed.

When the stimulator is turned on, the program starts as shown on the flowchart in **Figure 2**. First, basic parameters needed for further operation (inputs and outputs, interrupt vectors, etc.) are initialized. Then the stimulation sequences are read and the pulse and pause times are set. The last two parameters determine the stimulation frequency and pulse width. These two values can be changed only by the software and not by trimmer-potentiometers as in other stimulators. The program starts testing heel-switches and remains in the loop until gait is detected. The algorithm, which recognizes gait, has been tested before (14) and is based on the assumption that the patient is walking when three correct changes of the heel-switches are detected within the defined time intervals. The algorithm works when one or both heel-switches are used, although it takes longer to detect gait with only one heel-switch.

When gait is recognized, the program tests the swing or stance phase for each heel-switch and generates the stimulating pulses at the control outputs of the output stages, according to the preset stimulation sequences. To prevent crosstalk, the stimulation pulses of each channel are shifted for half a period in addition to the galvanic separation. After finishing each pulse, the program tests if the stance or swing phase of the stride is terminated, and if it is not, it generates a new pulse. When the phase ends the gait is tested again and if correct, the next phase time is predicted. If gait is not recognized the stimulation stops and the program returns to the algorithm for detection of gait.

Prediction of the next stride phase time (T[N + 1]) is based on the linear or weighted extrapolation of the previous four stride phase times (T[N])...T[N-3]), choosing the extrapolation according to the gradient of phase time, whether increasing or decreasing, as shown in **Table I** (14).

CONCLUSION

The stimulator has received preliminary testing in the Rehabilitation Institute in Ljubljana on a group of 18 patients. There were 10 left and 5 right hemiplegic patients after CVI and 3 patients after craniocerebral trauma (bilateral paresis). Patient age

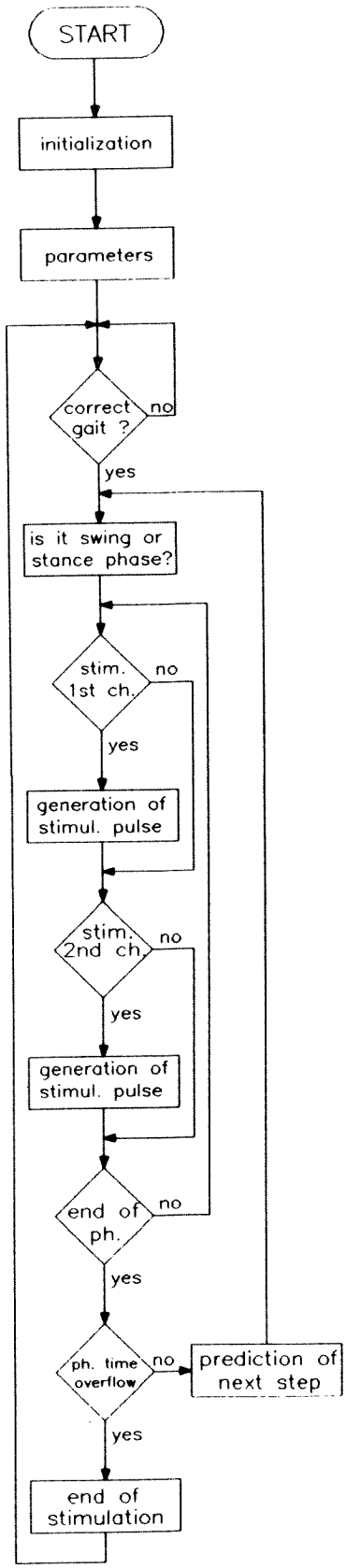

Figure 2.
Software flowchart of the dual-channel stimulator.

Table 1
The extrapolation formulas for prediction of the next stride phase time corresponding to the changes of the gradient of stride time

GRADIENT	EXTRAPOLATION FORMULA
increasing:	$T[N+1] = T[N]/2 + T[N-1]/4 + T[N-2]/8 + T[N-3]/8$
equal:	$T[N+1] = T[N]$
decreasing:	$T[N+1] = T[N]/4 + T[N-1]/4 + T[N-2]/4 + T[N-3]/4$

ranged from 18 to 79 years (mean 50 years) and from 5 weeks to 4 years post-onset of injury (mean 9 month). The stimulator was used in 8 patients for cyclic stimulation of antagonistic pairs of muscles to improve the range of motion in joints or to diminish spasticity, and in 10 patients for correction of gait. The effects of stimulation were not measured. We restricted the study to clinical estimations because our attention was concentrated on functioning of the stimulator, which turned out to be satisfactory.

The stimulator's correction of gait also was good: patients claimed walking was easier with it than with the single-channel devices they normally used. It was convenient that each channel could be triggered with the contralateral (healthy) leg since, in many patients, there are problems in heel-switch functioning due to poor heel-contact of the affected leg, which results in unreliable functioning of the stimulator.

The stimulator described, and shown in **Figure 3**, is a new orthotic aid for the correction of plegic or paretic gait. It can be used outside the clinical environment. It has been designed in the light of experiences with multichannel therapeutic stimulation that indicated the need for a multichannel orthotic device. Implementation of the idea was enabled by VLSI technology and CMOS microcomputers integrated in a single chip. Complicated logical functions can thus be accomplished with little consumption of space and low power dissipation using a battery power supply. Some features (such as walking-rate-dependent stimulation or the way of setting and representing the stimulation sequences) that are implemented in the dual-channel stimulator are unique and could not have been found in any device now available on the market.

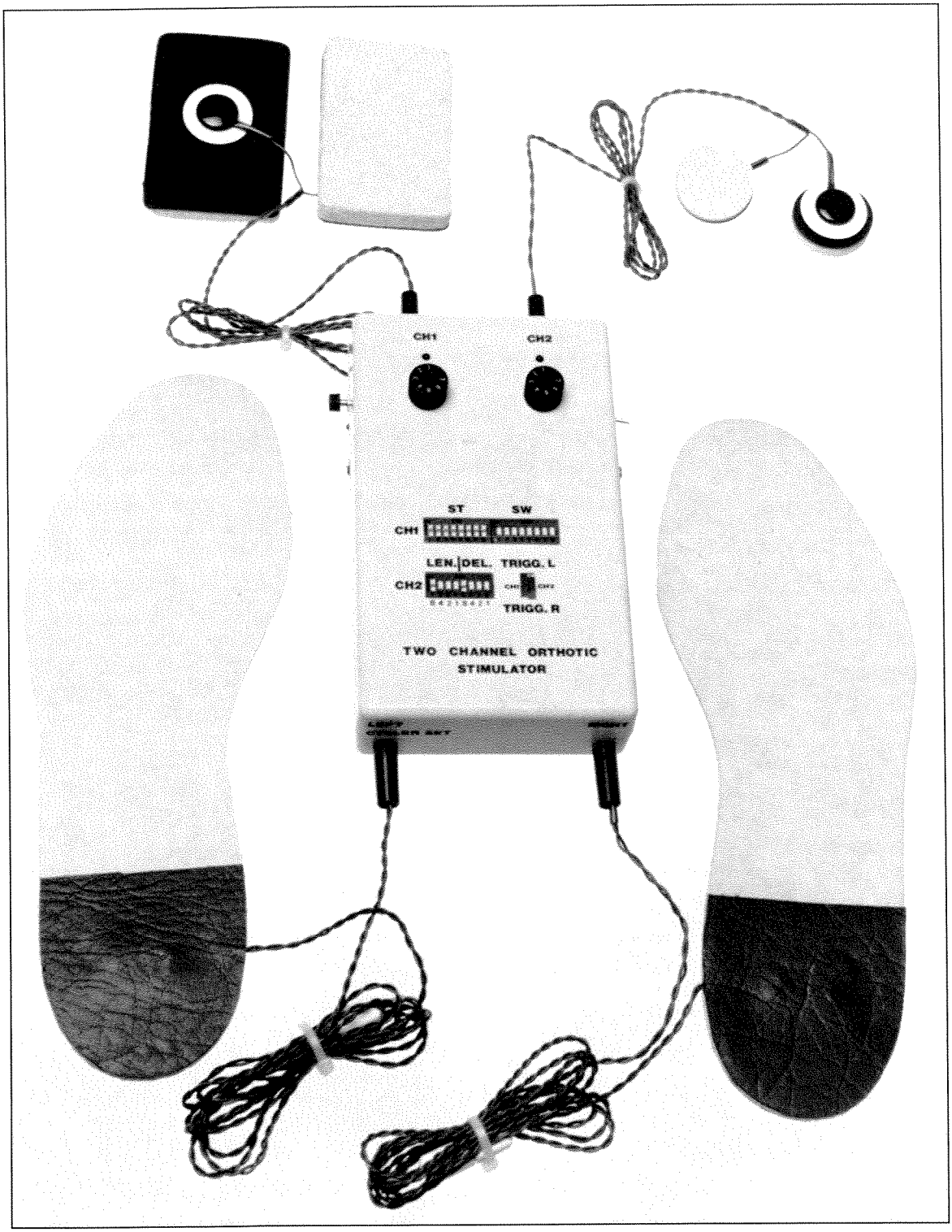

Figure 3.
Dual-channel stimulator prototype, with two insole heel-switches and two pairs of electrodes. On the top of the stimulator are two buttons for setting the amplitudes. Below them are switches for setting the stimulation sequence, 16 for the first and 8 for the second channel. On their left side are two switches for selection of triggering.

REFERENCES

1. BENTON LA, BAKER LL, BOWMAN BR, WATERS RL: *Functional Electrical Stimulation: A Practical Guide.* Downey, California: Rancho Los Amigos Rehabilitation Engineering Center, Rancho Los Amigos Hospital, 2nd edition, 1981.
2. BOGATAJ U, KLJAJIĆ M, STANIČ U, AĆIMOVIĆ R, GROS N: Gait pattern behavior of hemiplegic patients under the influence of a six-channel microprocessor stimulator in a real environment. In *Proceedings of the 2nd Conference on Rehabilitation Engineering*, 529-530, Ottawa, Canada, 1984.
3. CANZONERI J AND KOENIG DE: A biomedical engineering report on functional electric peroneal activators based on two years of clinical experience. In *Proceedings of the 4th International Symposium on External Control of Human Extremities*, 1, Dubrovnik, Yugoslavia, 1972.
4. CRAGO PE, PECKHAM HP, MORTIMER TJ, VAN DER MEULEN JP: The choice of pulse duration for cronic electrical stimulation via surface, nerve, and intramuscular electrodes, *Ann Biomed Eng* 2:252-264, 1974.
5. DILNER S, GEORGIEV G, KARSZINA A: Our experience from 100 patients fitted with peroneal muscle brace. In *Proceedings of the 8th International Congress of Physical Medicine and Rehabilitation*, Stockholm, Sweden, 1980.
6. GRACANIN F AND TRNKOCZY A: Optimal stimulus parameters for minimum pain in the cronic stimulation of innervated muscle, *Arch Phys Med Rehabil* 56:243-249, 1975.
7. GRAČANIN F AND VRABIČ M: *User Manual for FEPA 11*, ZRI Ljubljana, Yugoslavia, 1974.
8. JEGLIČ A: Two-channel implant—Approach to an orthotic device. In *Proceedings of the 4th International Symposium on External Control of Human Extremities*, 647-656, Dubrovnik, Yugoslavia, 1972.
9. KELIH B, MALEŽIČ M, GROS N, KLJAJIĆ M, BOGATAJ U, AĆIMOVIĆ R: Evaluation of gait during therapy with six-channel electrical stimulation. In *Proceedings of the XIV ICMBE and VII ICMP* 9.23:424-425, Espoo, Finland, 1985.
10. MALEŽIČ M, KRAJNIK J, STANIČ U, STOPAR M, AĆIMOVIĆ R, GROS N: Optimization of number of channels for electrical stimulation of pathological gait. *World Congress on Physics and Biomedical Engineering* 12:32, Hamburg, 1982.
11. MALEŽIČ M, STANIČ U, KLJAJIĆ M, AĆIMOVIĆ R, GROS N, KRAJNIK J, STOPAR M: Multichannel electrical stimulation of gait in motor disabled patients. *Orthop* 7:1187-1195, 1984.
12. MALEŽIČ M, TRNKOCZY A, REBERŠEK S, AĆIMOVIĆ R, GROS N, STROJNIK P, STANIČ U: Advanced cutaneous stimulators for paretic patients' personal use. In *Proceedings of the 6th International Symposium on External Control of Human Extremities*, 233-241, Dubrovnik, Yugoslavia, 1978.
13. NAUMANN S, MIFSUD M, CARINS BJ, MILNER M: Dual-channel electrical stimulators for use by children with plegic spastic cerebral palsy. *Med Biol Eng Comput* 23:435-443, 1985.
14. PIRNAT P AND TRNKOCZY A: Further technical improvements of multichannel FES using microprocessor control. In *Proceedings of the 7th International Symposium on External Control of Human Extremities*, 317-326, Dubrovnik, Yugoslavia, 1981.
15. SCHUCK E, FRIEDMAN H, WILEMON W, MCNEAL D: Developing clinical devices for hemiplegic stroke patients. In *Proceedings of the 4th International Symposium on External Control of Human Extremities*, 535, Dubrovnik, Yugoslavia, 1972.
16. STANIČ U, AĆIMOVIĆ R, GROS N, TRNKOCZY A, BAJD T, KLJAJIĆ M: Multichannel electrical stimulation for correction of hemiplegic gait. *Scand J Rehabil Med* 10:75-92, 1978.
17. STANIČ U, AĆIMOVIĆ R, GROS N, TRNKOCZY A, KLJAJIĆ M, BAJD T, KRAJNIK J, STOPAR M: Multichannel stimulation of lower extremities. In *Proceedings of the 6th International Symposium on External Control of Human Extremities*, 201-210, Dubrovnik, Yugoslavia, 1978.
18. TRNKOCZY A, STANIČ U, JEGLIČ T: Electronic peroneal brace with new sequence of stimulation. *Med Biol Eng*, 570-576, 1975.
19. VAN GRIETHUYSEN CM, PAUL PJ, ANDREWS BJ, NICOL AC: Biomechanics of functional electrical stimulation. *Prosthet Orthot Int* 6:152-156, 1982.
20. VODOVNIK L, BAJD T, KRALJ A, GRAČANIN F, STROJNIK P: Functional electrical stimulation for control of locomotor systems. *CRC Critical Reviews in Bioengineering* 6(2):63-131, 1981.
21. VRENDENBREGT I, VAN LEEUWEN HJ: A muscle stimulator for hemiplegic patients. In *Biomechanics II, Medicine and Sport*, 6 (eds. I. Vrendenbregt and I. Wartenweiler). Basel: S. Krager, 285, 1971.