Veterans Administration

Journal of Rehabilitation Research and Development Vol. 25 No.3
Pages 1–18

Directional instability of rear caster wheelchairs

TIMOTHY J. COLLINS, MS, and JAMES J. KAUZLARICH, PhD
University of Virginia Rehabilitation Engineering Center, P.O. Box 3368, University Station, Charlottesville, Virginia 22903

Abstract—Although less common than conventional front caster wheelchairs, rear caster wheelchairs are still in use for several reasons. Many people find manual rear caster wheelchairs easier to maneuver indoors at slow speeds. This is especially true when the user attempts to maneuver the wheelchair very close to an object, such as a table. Electric wheelchairs often have rear casters to accommodate for front wheel drive. If the larger drive wheels are located at the front of the wheelchair, obstacles such as a curb can be negotiated much more easily. However, a major disadvantage of rear caster wheelchairs is that they are generally known to be directionally unstable, especially at high forward speeds. This paper presents the results of a study to determine specific measures that can be employed to improve the stability of this type of wheelchair.

The instability of rear caster wheelchairs is due primarily to road forces that act on the tires when the wheelchair is displaced from its line of motion by a bump or other irregularity in the road surface. The paper discusses the experimental investigation of these road forces as well as a dynamic model used to study the instability problem. The results of a computer simulation program used to perform a parametric study of different design variables are discussed. Center of gravity position, caster trail distance, and caster pin friction are found to have a dominant influence on rear caster wheelchair directional control. Several simple but significant design recommendations are presented.

Key words: *center of gravity, directional instability, front wheel drive, rear caster wheelchair.*

INTRODUCTION

The problem of controlling an unstable vehicle is not new. For example, it has been known for some time that aircraft equipped with a castered tailwheel experience steering difficulty while taxiing. These planes require tail rudder control and wheel braking in order to maintain a straight path. Wheelchairs that have rear castered or rear pivoting wheels experience a very similar problem. However, aircraft and wheelchairs with pivoting wheels in front of the center of gravity are always directionally stable up to very high speeds.

There are several motivations for studying the directional control problem associated with rear caster wheelchairs. Although less popular than conventional front caster wheelchairs, rear caster wheelchairs have several inherent advantages. Electric wheelchairs often use rear casters because of the ease with which obstacles such as a curb can be negotiated. Other considerations sometimes make rear casters desirable for manual wheelchairs. For example, rear caster manual wheelchairs are generally easier to maneuver close to an object, such as a counter or table. Aside from these reasons, some

This work was supported by the National Institute on Disability and Rehabilitation Research, Grant #G00-8300-72.

Tim Collins is presently an engineer at NASA Langley Research Center in Hampton, Virginia.

Address all correspondence to: James J. Kauzlarich, PhD, University of Virginia Rehabilitation Engineering Center, PO Box 3368, University Station, Charlottesville, VA 22903.

Journal of Rehabilitation Research and Development Vol. 25 No. 3 Summer 1988

Figure 1.
A typical manual rear caster wheelchair.

users purchase a rear caster wheelchair simply because it is the type they are accustomed to.

Steering instabilities associated with rear casters must be compensated for in order for the user to maintain a straight path. Unstable electric wheelchairs require much more manipulation of the joystick. Unstable manual wheelchairs require additional physical exertion that some users may be unable to supply. When operated at high speeds or on uneven ground, rear caster wheelchairs are often uncontrollable and may become dangerous. For these reasons, a potential user should have an understanding of the directional instability of rear caster wheelchairs. **Figure 1** shows a typical manual rear caster wheelchair.

PROBLEM DESCRIPTION

Directional stability is generally defined as the ability of a moving vehicle to stabilize its motion against external disturbances. A fundamental description of the control problem associated with rear caster wheelchairs was published in 1985 by Kauzlarich and Thacker (6). They showed that when a wheelchair is displaced from its line of motion by a jolting force, such as a bump in the road, it experiences a twisting moment about the center of gravity. This moment is due to lateral road forces that develop at the tire-road interface.

Figure 2 shows a rear caster wheelchair that has been suddenly displaced from the intended direction of motion by an angle, Θ. The lateral force on a rolling tire is often referred to as a "cornering force." In **Figure 2** the lateral road forces are labeled F_y. The distance s_1 is measured perpendicularly from the 2 fixed wheels to the center of gravity. In this simplified analysis, the twisting moment produced by the lateral road forces has a magnitude of $2s_1F_y$. Because the lateral road forces act ahead of the center of gravity for a rear caster wheelchair, the resulting moment M causes the wheelchair to rotate even further away from the desired directional heading. For this reason, the moment is referred to as being directionally destabilizing.

It is clear from the simple model depicted in **Figure 2** that reducing the distance s_1 will reduce the destabilizing moment and thus will improve directional control. Furthermore, it is clear that a knowledge of the lateral road force, F_y, is necessary for a complete analysis of the instability problem.

This paper presents the results of experimental testing which was conducted for the purpose of developing a simple mathematical description of lateral wheelchair tire forces. A computer simulation model that incorporates this mathematical descrip-

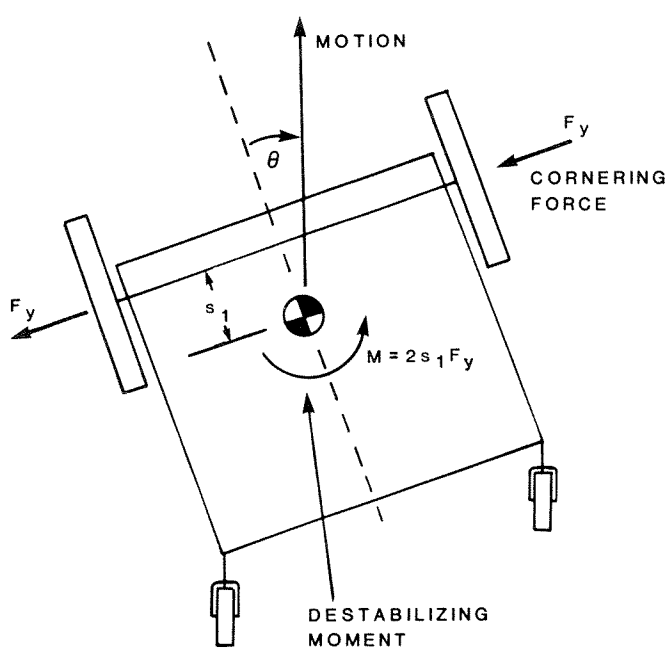

Figure 2.
Destabilizing moment for rear caster wheelchair.

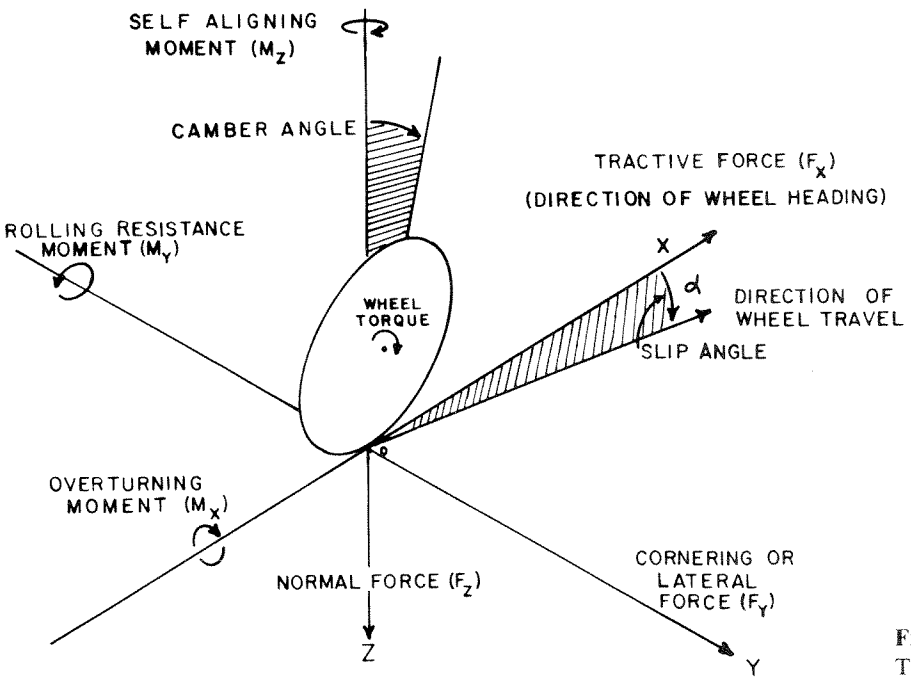

Figure 3.
Tire forces and moments, after Wong (14).

tion is also outlined. Using this simulation model, it was possible to determine the importance of several wheelchair design parameters as related to the directional instability problem.

WHEELCHAIR TIRE TESTS

Aside from gravitational force, the only external forces that act on a rolling wheelchair occur at the tire-road interface. **Figure 3** shows a coordinate system that is often used as a reference for the definition of various tire forces and moments. This reference system is recommended by the Society of Automotive Engineers and is described in detail by Wong (14).

When considering the problem of directional instability, the most important tire force variable is the slip angle, α. The slip angle is the angle between the heading of the wheel plane and the actual direction of wheel travel. A slip angle results whenever the wheel has a nonzero velocity component along its Y axis.

The term slip angle does not mean that the wheel is slipping or sliding with respect to the ground. The elastic nature of the rolling tire allows for small wheel velocities perpendicular to the wheel heading without sliding. When a rolling wheel is forced to travel sideways in addition to its forward direction, a lateral force perpendicular to the wheel plane necessarily develops. This lateral force, F_y, originates from the elastic forces of tire particles as they pass the ground contact area. This phenomenon is well described in the automobile literature (1,9,11,12). The lateral force, F_y, resists the tendency of the wheel to slide, and it always acts in a direction that is opposite the Y axis component of the velocity of the wheel. When no camber angle is present, the total lateral force is due solely to the presence of the slip angle and it is referred to as the cornering force. This term arises from the fact that some lateral force is always required for any vehicle to change direction or negotiate a turn.

In **Figure 3**, F_x is the longitudinal or tractive force which acts along the direction of the heading of the wheel. Some tractive force is always necessary to overcome the natural rolling resistance of a wheel. The reader is referred to Kauzlarich and Thacker (7) for a complete discussion of rolling resistance. F_z is the normal force which acts in the negative Z direction, or perpendicular to the tire contact patch. The weight of a vehicle is supported by the sum of the normal forces acting on each wheel. Because the forces F_x, F_y, and F_z do not in general act exactly at

Journal of Rehabilitation Research and Development Vol. 25 No. 3 Summer 1988

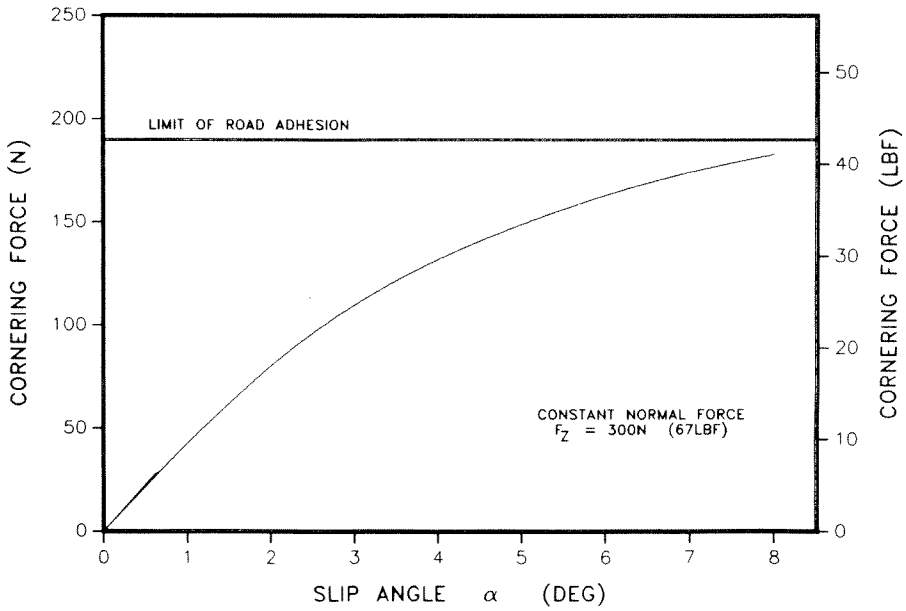

Figure 4.
Typical cornering force versus slip angle curve at constant normal force.

the origin as shown in **Figure 3**, they create 3 moments that act on a rolling tire. These moments are small for wheelchair tires and can be ignored for a first order analysis of wheelchair motion.

Because the lateral tire force, F_y, as shown in **Figure 2** and **Figure 3** is inevitably responsible for the deviation of a vehicle from a direct course, it is almost universally regarded as the most important of all the tire forces and moments (9). When a vehicle is constrained to make only moderate course changes on a level surface, it is found that the primary variables that affect cornering force are normal force and slip angle. This assertion is well-supported by extensive tests that have been conducted on automobile tires (1,10,11,14) and by treadmill tests performed using wheelchair tires (2).

As part of the research reported in this paper, several different wheelchair tires were examined using a test cart and a treadmill. A load cell mounted alongside the treadmill was used to measure the cornering force, F_y, exerted on a fixed wheel that had been turned to some known slip angle with respect to the motion of the treadmill belt. This testing was carried out for a range of normal forces, F_z, at the tire-belt interface. Both pneumatic and solid rubber tires were considered. The details of the test cart and treadmill apparatus used to investigate wheelchair tire forces are contained in reference (2) and will not be presented here.

Figure 4 illustrates a typical plot of cornering force as a function of slip angle for a representative wheelchair tire (in this case a solid rubber tire). For small slip angles, the cornering force increases linearly with an increase in slip angle. For slip angles larger than approximately 2 degrees, the cornering force begins to increase at a lower rate. The cornering force reaches a maximum value as it approaches the limit of road adhesion. At this point, the tire begins to slide laterally.

Using treadmill data for a range of slip angles and test cart loads makes it possible to construct a family of cornering force curves for a particular wheelchair tire. **Figure 5** shows such a family of curves for the same solid rubber tire represented in **Figure 4**. Using an experimentally determined set of curves like those in **Figure 5**, it is possible to develop a simple method for empirically expressing lateral cornering force, F_y, as a function of normal force, F_z, at constant slip angle. This method is described by Nordeen (9). Lateral cornering force, F_y, is empirically related to normal force, F_z, by using a simple third degree polynomial as follows:

$$F_y = aF_z + bF_z^2 + cF_z^3 \qquad [1]$$

In Equation [1] a, b, and c are constants that depend on the slip angle. If the constants a, b, and c are determined for a family of curves such as those shown in **Figure 5**, it is possible to interpolate cornering force for any combination of slip angle and normal load.

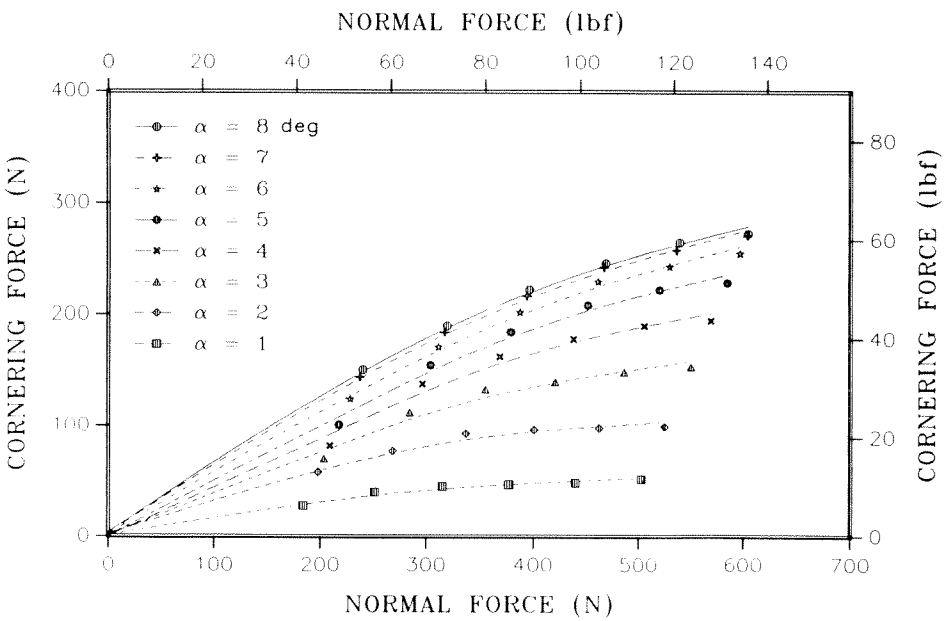

Figure 5.
Cornering force versus normal force curves for a range of slip angles.

It is notable that for the pneumatic wheelchair tires tested, lateral cornering force was found to be almost entirely independent of secondary parameters such as inflation pressure and forward speed. This conclusion results from extensive treadmill testing and is in agreement with similar findings for automobile and aircraft tires (1,2,9,11,14).

SIMULATING WHEELCHAIR MOTION

For the purpose of simulating wheelchair motion and investigating directional instability, a 5-degree-of-freedom mathematical model was formulated. This model is based upon **Figure 6**, which represents a typical manual rear caster wheelchair. The complete equations of motion associated with the model in **Figure 6** are cumbersome and will not be presented here. The interested reader is directed to reference (2) for a complete treatment of these equations. The important aspects of the wheelchair model in **Figure 6** as related to the study of directional instability will now be discussed.

In **Figure 6** the symbol F represents force, and appropriate subscripts are used to indicate the tire that a particular force acts on. Although lateral tire force, F_y, is considered to be of primary importance, the general model also allows for the inclusion of longitudinal tractive forces, F_x.

The individual caster wheels are allowed to rotate independently about their respective caster pins, P_a and P_b, as shown in the figure. Friction at the caster pins is accounted for by including the moments M_f at each caster pin. Note that it is not assumed that the center of gravity necessarily lies on the longitudinal axis. In **Figure 6**, $\dot{u}$ and $\dot{v}$ represent the longitudinal and lateral velocity components of the wheelchair. These velocity components lie along the body-fixed x and y axes as shown. The body-fixed axis system moves and rotates with the moving wheelchair. This system is convenient for writing the wheelchair equations of motion. The rate at which the wheelchair rotates about its vertical axis, the angular velocity, is represented by $\dot{\Theta}$. The angular velocity of a moving vehicle is generally termed yaw velocity in the automobile literature. This convention will also be adopted in this paper.

The points C, C_a, and C_b represent the center of gravity of the wheelchair-user system and the caster assemblies respectively. The angles η and β represent the orientation of the caster wheels with respect to the x body axis as shown. As will be discussed in greater depth shortly, the most important variables with respect to the problem of directional instability are found to be:

(1) front axle to center of gravity distance, s_1
(2) caster trail distance, w
(3) frictional caster moments, M_f
(4) forward speed of the wheelchair, $\dot{u}$.

The basic method used to simulate wheelchair

Journal of Rehabilitation Research and Development Vol. 25 No. 3 Summer 1988

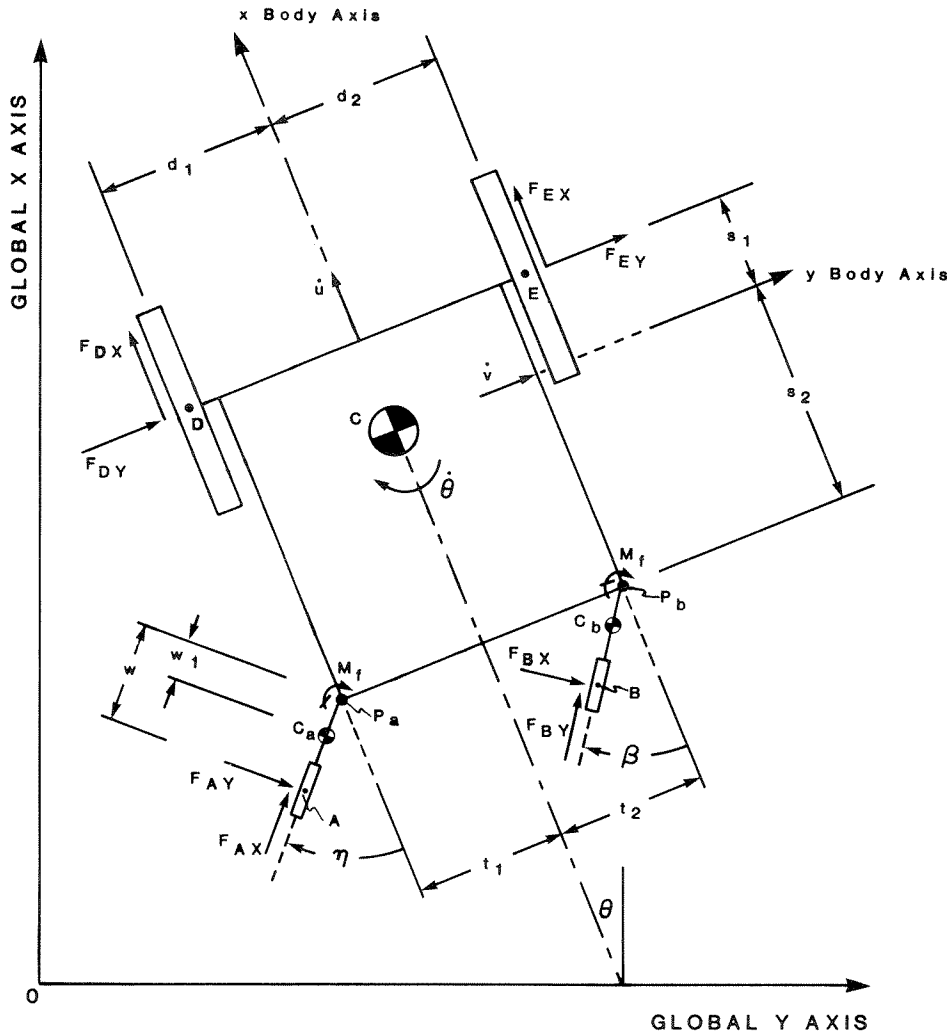

Figure 6.
Wheelchair model.

motion is adapted from a simulation model described by Dugoff, Fancher, and Segel (3). **Figure 7** shows a block diagram of a computer program designed to simulate simple wheelchair motion. To begin the process of simulating the motion of a rear caster wheelchair, all variables of interest to the directional instability problem must be initially defined. These include obvious parameters, such as geometric dimensions and mass and inertia properties, as well as other variables, such as caster pin friction. An initial velocity in the forward direction must also be specified. At this stage, the wheelchair is assumed to be rolling unhindered, without the presence of any lateral or longitudinal tire forces. At time $t=0$, a small destabilizing disturbance is defined, which tends to make the wheelchair deviate from the original straight line heading. The stability of various wheelchairs can be compared by examining responses to the same initial disturbance. It is noted that even the inherently unstable rear caster wheelchair will not deviate from a straight path unless some disturbance initiates such a response.

An initial disturbance, such as a bump in the road, can be simulated either by giving the center of mass of the wheelchair a small initial lateral velocity component, or by defining a momentary side force (or impulse) that acts over a short period of the initial motion.

Using the initial conditions, values for the slip angles at each tire can be calculated. Static equations are used to determine the normal forces at each of the 4 wheels. It is noted that any lateral cornering force will attempt to roll or tip the wheelchair to one side. This results in unequal normal forces at the tires on each side of the wheelchair.

Once the normal forces and slip angles have been found, experimental tire force curves like those

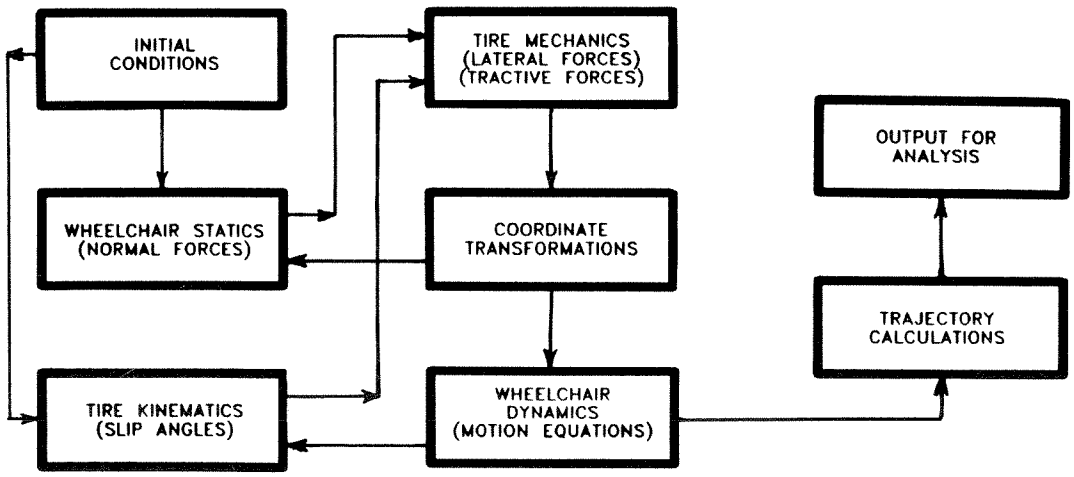

Figure 7.
Block diagram for wheelchair motion simulation computer program.

shown in **Figure 5** are used in conjunction with Equation [1] to determine the lateral cornering force at each tire. Longitudinal forces can be included using a similar technique. The total force acting on the wheelchair along with the dynamic equations of motion (2) are used to determine trajectory and rate of angular rotation. Each of these calculations is performed over a small time step (typically 0.001 sec). As the wheelchair moves and rotates, values for the slip angles and tire forces must be constantly updated. By repeating this process over many time steps, it is possible to obtain an idea of how much a particular wheelchair will diverge from a desired course when subjected to a slight initial disturbance.

The remainder of this paper reports the results of several simulations that were conducted to determine the importance of various design parameters as related to the directional instability problem of rear caster wheelchairs. The initial conditions for a typical rear caster wheelchair will be given. Based upon the simulation results, several simple but significant recommendations for the design of rear caster wheelchairs are presented. These will be based on test results for a manual rear caster wheelchair, but it is believed that they are general in nature and can be extended to electric wheelchairs as well.

SIMULATION RESULTS

To begin the process of investigating directional instability, the manual rear caster wheelchair shown in **Figure 1** was used as a starting point. Initial parameters were chosen to correspond to this wheelchair. Values for parameters such as caster friction and moment of inertia were determined experimentally. Mass property parameters were determined by assuming a typical user with mass 75 kg. **Table 1** summarizes the initial (default) parameters used as a reference point for the examination of the instability problem (see **Figure 6**).

All of the results presented in this paper correspond to an initial disturbance consisting of a lateral impulse acting at the wheelchair center of gravity. This impulse was modeled by assuming a lateral disturbing side force, F_s, of 40N acting over a time

Table 1.
Summary of default values used by simulation program.

d_1	=	d_2 = 26.5 cm (10.4 in)
s_1	=	34.5 cm (13.6 in)
s_2	=	17.5 cm (6.9 in)
t_1	=	t_2 = 24.0 cm (9.4 in)
w_1	=	5.8 cm (2.3 in)
w	=	8.0 cm (3.1 in)
η	=	β = 0 degrees
m	=	95 kg (209 lbf)
m_c	=	1.2 kg (2.6 lbf)
I_z	=	5.6 kg-m^2 (4.1 ft-lbf-sec^2)
I_{zp}	=	0.02 kg-m^2 (0.015 ft-lbf-sec^2)
M_f	=	0.10 N-m (0.88 in-lbf)

Journal of Rehabilitation Research and Development Vol. 25 No. 3 Summer 1988

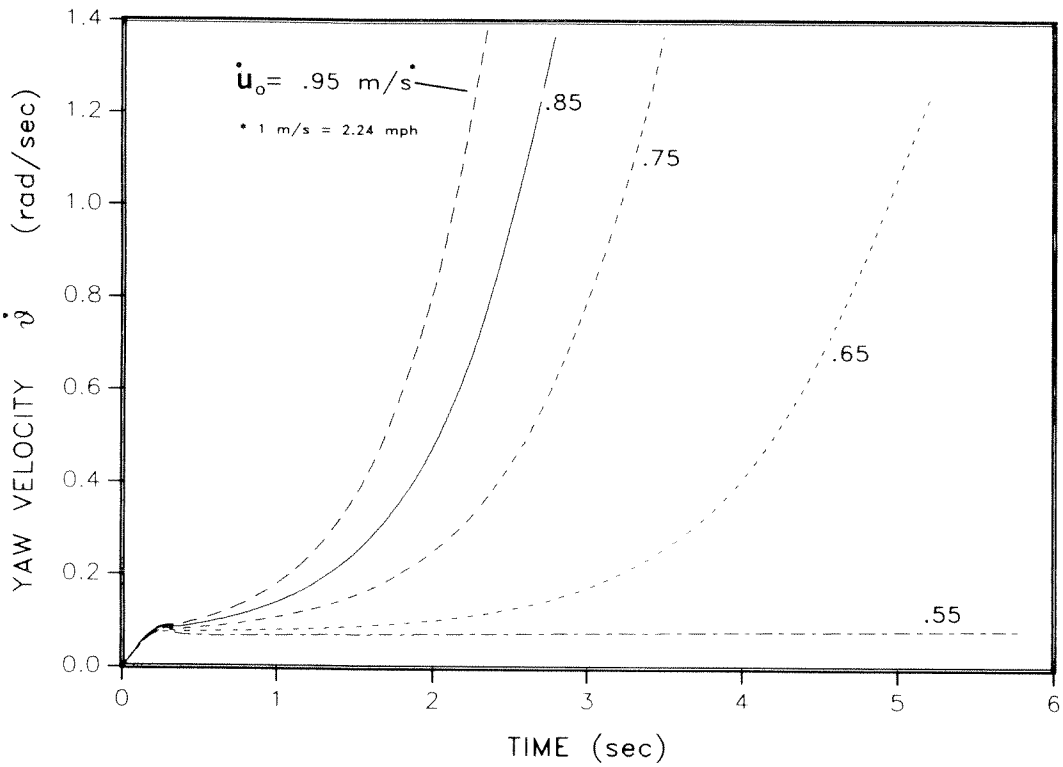

Figure 8.
The effect of forward speed on yaw velocity response.

interval of 0.10 sec. This corresponds to a lateral impulse of 4 N-sec applied at time t = 0. By comparing the responses of different wheelchairs under different conditions to this constant initial impulse, it is possible to compare directional stability characteristics. Other initial disturbing forces were considered and are presented in reference (2) but will not be discussed here.

One method of comparing the directional responses of different vehicles is by comparing the yaw velocity response, $\dot{\Theta}$, of each vehicle upon being subjected to the same initial disturbance. This method is sometimes used in the automobile literature (4,14). **Figure 8** shows yaw velocity response curves for several different initial values of forward speed. Note that in **Figure 8** all of the curves are for a wheelchair with parameter values as listed in **Table 1** and for an initial lateral impulse of 4 N-sec.

Figure 8 shows that the degree of directional instability is highly dependent upon forward speed. The degree of instability is represented by the rate at which the yaw velocity (angular velocity) increases. This is equivalent to the rate at which the wheelchair diverges from its original directional heading. The area under the yaw velocity curves represents the total angular displacement of the wheelchair, Θ. Similarly, the slope of the tangent to the yaw velocity curves at any point represents the instantaneous angular acceleration of the wheelchair, $\ddot{\Theta}$. Thus, the curves with steeper initial slopes indicate more rapid divergence from the original directional heading. The fact that directional instability increases at higher speeds can be predicted analytically (2,14). This result also correlates with the common observation that users of rear caster wheelchairs have the greatest steering difficulty when traveling at higher speeds.

The simulation computer program was used to predict the trajectories of both a front and a rear caster wheelchair, each moving forward with a speed of .75 m/sec and each subjected to the same initial disturbance of 4 N-sec. This was done both as a means of verifying the computer program and as a means of easily comprehending the nature of the directional instability problem. The simulation program should predict a very significant difference between the responses of the 2 different types of wheelchairs. **Figures 9a and 9b** demonstrate that this is the case. The rear caster wheelchair (**Figure 9a**) continues to diverge more and more from its original directional heading even after the initial disturbance is removed. This is typical behavior for an inherently unstable vehicle. Although the front caster wheelchair (**Figure 9b**) does deviate from its

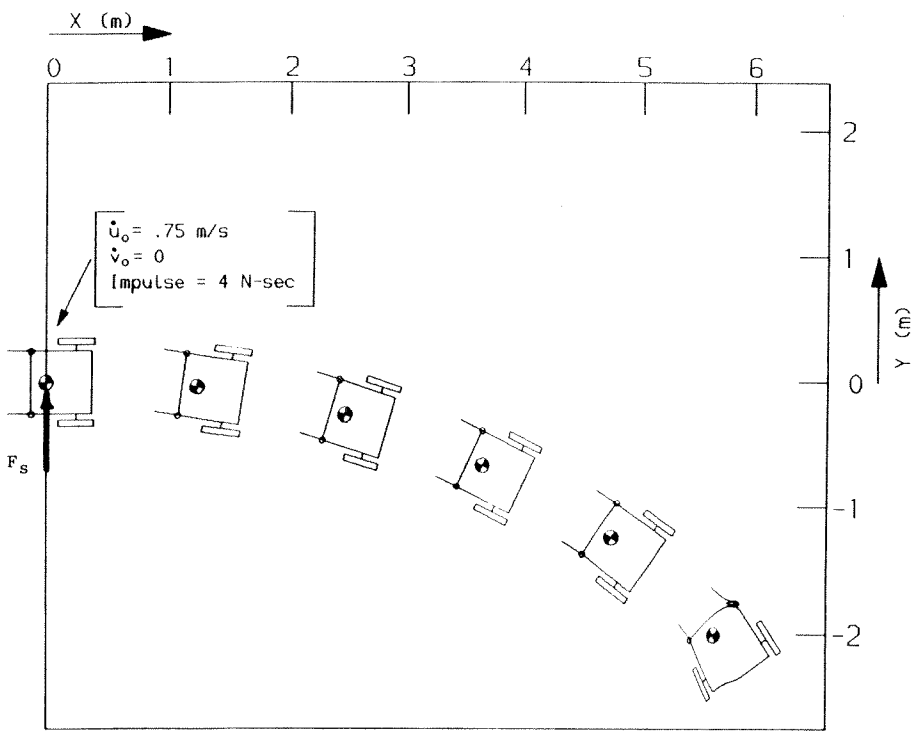

Figure 9a.
Predicted trajectory for a rear caster wheelchair traveling at .75 m/s and subjected to a lateral impulse at the center of gravity of 4 N-sec.

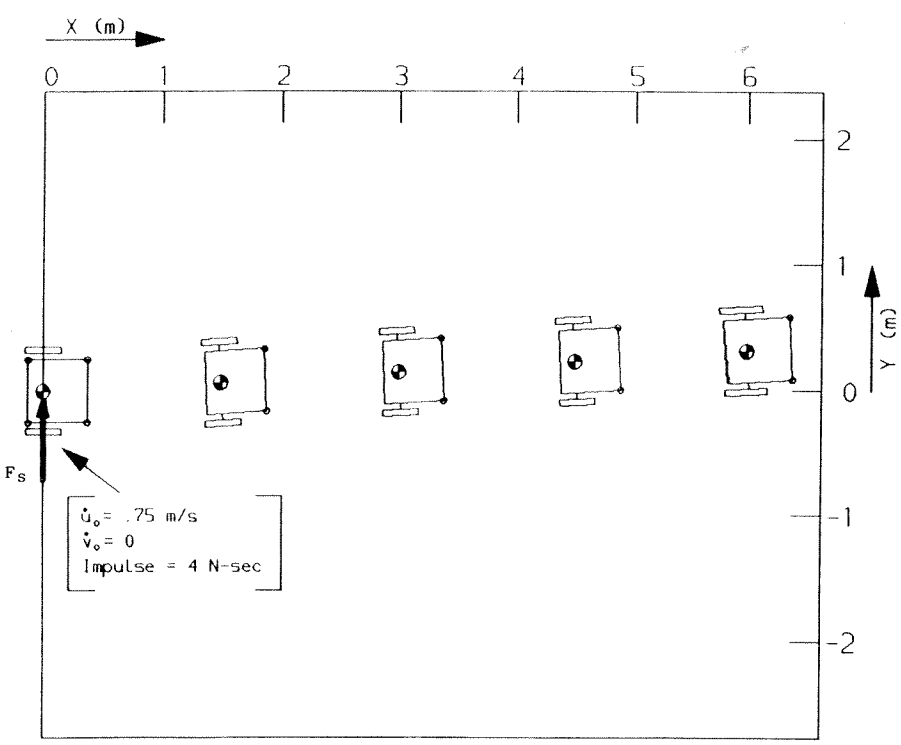

Figure 9b.
Predicted trajectory for a front caster wheelchair traveling at .75 m/s and subjected to a lateral impulse at the center of gravity of 4 N-sec.

Journal of Rehabilitation Research and Development Vol. 25 No. 3 Summer 1988

original heading, it quickly returns to a state of steady straight-line motion after the initial side force is removed.

In order to evaluate the effect on directional stability of varying any particular design parameter, a reference yaw velocity response curve was selected against which other responses could be compared. For the purposes of this investigation, the $\dot{u}_o = .75$ m/sec curve shown in **Figure 8** was chosen as an assumed reference case. This choice is based upon consideration of the response time available to the user to take corrective action before the yaw velocity response curve begins to increase rapidly. It is reasonable to expect that at least 1 to 2 seconds will be required for a wheelchair user to recognize a destabilizing disturbance and to initiate corrective action (2). It is clear from **Figure 8** that for time greater than approximately 2 seconds, the yaw velocity associated with the $\dot{u}_o = .75$ m/sec curve increases very rapidly. Based upon this reasoning, the $\dot{u}_o = .75$ m/sec curve in **Figure 8** was selected as the assumed reference case. The region to the right of this curve will be termed the controllable region, while the region to the left of the curve will be termed uncontrollable. The following assumptions are emphasized:

(1) The controllable and uncontrollable regions are defined as only reasonable estimates for the purpose of comparing the effects of varying other design parameters. These regions will be different for different wheelchairs and different users.

(2) The assumed reference case corresponds to 1 forward speed only (.75 m/sec) and to 1 initial disturbance only (lateral impulse of 4 N-sec). When comparing simulation results for different design parameters, these 2 initial conditions must be the same.

(3) The assumed reference case is only representative of the rear caster wheelchair shown in **Figure 1** with default values as listed in **Table 1**.

After a reference case has been defined, it is possible to examine the effect of varying several other parameters. The effect of varying a particular parameter is examined by comparing the new yaw velocity response curves with the yaw velocity response curve of the assumed reference case.

The parameter expected to have the most significant effect on directional stability is the position of the large wheels with respect to the center of gravity as discussed in association with **Figure 1**. Referring to **Figure 6**, it is seen that the variables that determine the center of gravity position in the longitudinal direction are the distances s_1 and s_2. The effect of changing the center of gravity position, while keeping all other variables constant, can be determined by varying the following ratio:

$$RAT = \frac{s_1}{s_1 + s_2} \qquad [2]$$

The value of RAT may range from zero (all of the weight carried by the large front wheels) to 1 (all of the weight carried by the rear caster wheels). For the default case, $s_1 = .345$ m and $s_2 = .175$ m. This gives a value for the ratio in Equation [2] of RAT = 0.66. The effect of varying this ratio on yaw velocity response is shown in **Figure 10**. As expected, as the center of gravity is moved forward, RAT decreases and the degree of directional instability decreases.

The decrease in yaw velocity response as the center of gravity is moved forward is quite dramatic. Decreasing the ratio in Equation [2] from 0.66 to 0.60, a decrease of 6 percent, produces only a slight change in the reference case curve. However, moving the center of gravity forward only slightly more, so that the ratio becomes 0.55, produces a very noticeable change in yaw velocity response. For ratios less than 0.55, the yaw velocity response curves fall well within the defined controllable range.

It is emphasized that reducing the value of RAT to 0.55 or some lower value does not necessarily produce a significant improvement in the overall directional stability of the wheelchair. It only indicates a significant improvement for the single value of initial forward speed (0.75 m/sec) that was assumed for the reference case. A measure of the improvement in overall directional stability can only be obtained by determining how much the initial forward speed can be increased while still keeping the yaw velocity response in the controllable range. This question will be considered later.

A second parameter of considerable interest is the caster trail distance w, as shown in **Figure 6**. The measured caster trail distance used for the reference case was 8 cm. **Figure 11** compares computer simulation results for 2 other w values with the assumed reference case. Decreasing w from 8 cm to 7 cm shifts the yaw velocity response curve into the controllable region. For all 3 curves in **Figure 11**, the distance to the caster assembly center of gravity, w_1 in **Figure 6**, is assumed constant.

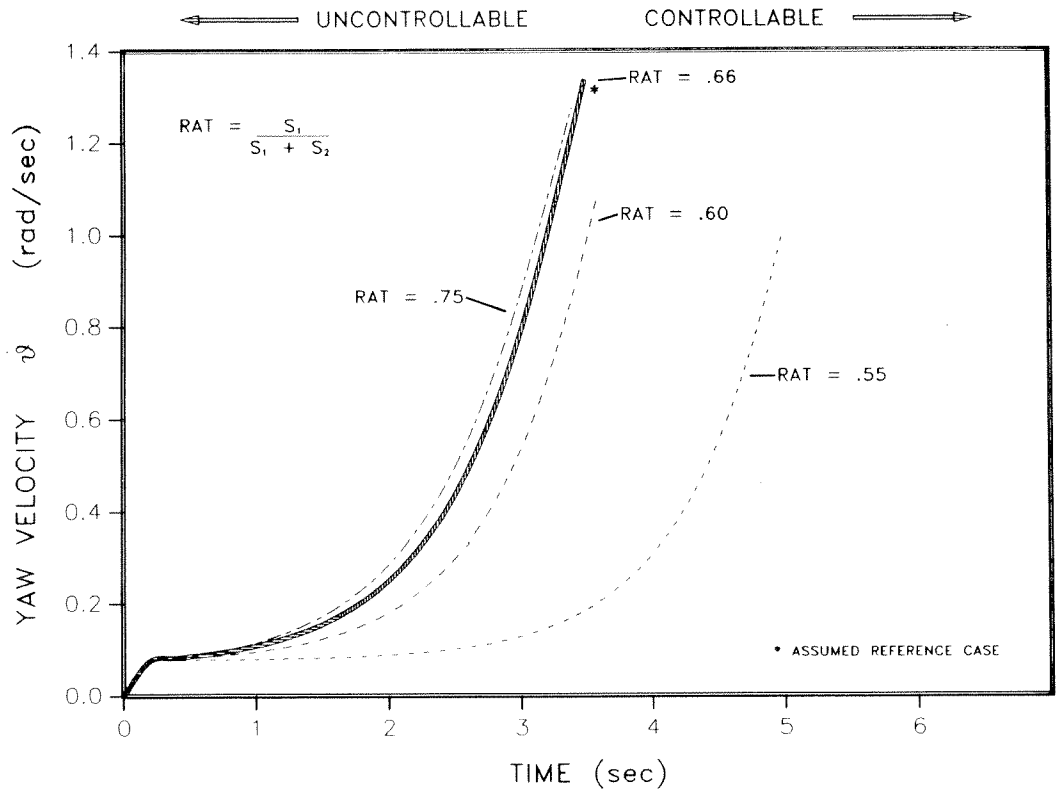

Figure 10.
The effect of center of gravity position on yaw velocity response.

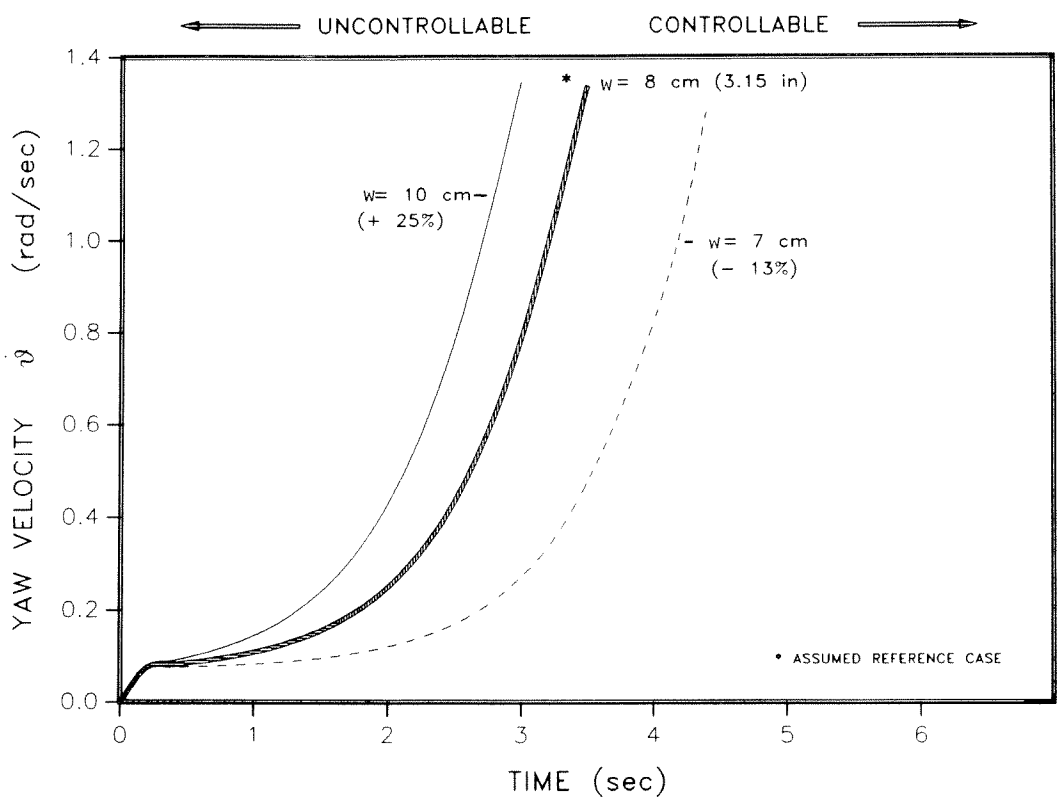

Figure 11.
The effect of caster trail distance (w) on yaw velocity response.

Journal of Rehabilitation Research and Development Vol. 25 No. 3 Summer 1988

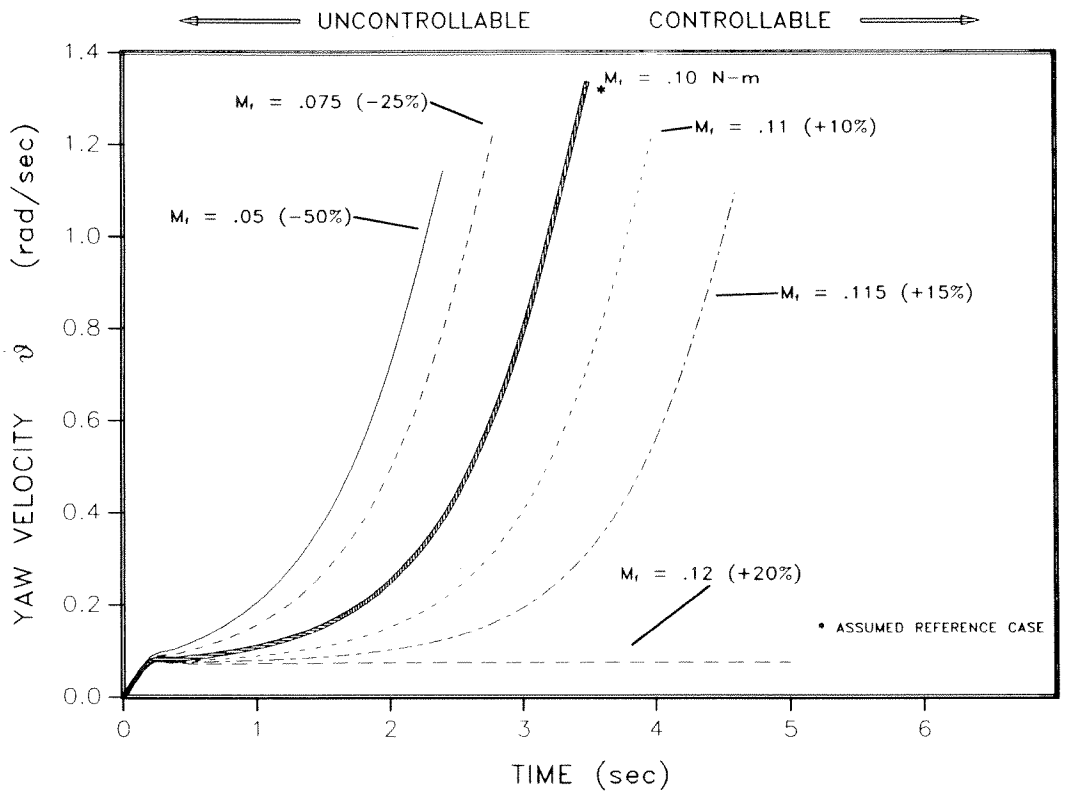

Figure 12.
The effect of friction at the caster pins (M_f) on yaw velocity response.

There is an obvious reason for the fact that decreasing caster trail distance improves directional stability. As the caster trail distance is decreased, the effective moment arm for the lateral forces acting on the caster is decreased. This has the effect of making the casters more resistant to turning. As a result, the caster wheels are capable of resisting the effect of larger lateral cornering forces. Directional stability will always be improved if the rear casters are made more resistant to turning.

Although **Figure 11** suggests that some improvement in directional stability can be achieved by decreasing the caster trail distance, it has been shown by Kauzlarich, Bruning, and Thacker (5) that decreasing caster trail distance encourages the onset of caster wheel shimmy. However, it is common to find caster trail distances of only 4 to 6 cm on typical wheelchairs. These distances are significantly lower than the value of 8 cm, which was measured for the wheelchair used in this study. Furthermore, Kauzlarich (5) has designed a grooved tread caster wheel that tends to inhibit shimmy problems. Thus, it is reasonable to expect that decreasing caster trail distance may be a useful means for partially reducing the directional instability of some rear caster wheelchairs.

It is found that yaw velocity response is also quite sensitive to the amount of friction present at the caster pins. The assumed value for M_f is 0.10 N-m. This frictional moment is a measure of how much torque is required to rotate the caster wheels about their respective pivot pins when no other forces are present.

The friction at the caster pins can be varied by tightening or loosening the bolts that hold the casters in place. Many wheelchairs are adjusted so that the friction at the caster pins is essentially zero. Low caster friction is desirable, because less friction makes a wheelchair more maneuverable at slow speeds. However, for rear caster wheelchairs, a tolerable amount of caster friction can help reduce the degree of directional instability.

The effect on yaw velocity response of varying the frictional moment M_f at the caster pins is shown in **Figure 12**. The simulation results shown in the figure indicate that increasing the caster friction by only 20 percent significantly improves the controllability of the wheelchair. In other words, the amount of time available for the user to make a course correction is significantly increased for larger values of M_f. This implies that the wheelchair should be controllable at higher speeds if the caster friction is increased. The

Table 2.
Summary of parametric study.

Parameters	Effect on Directional Instability
Tire selection, camber angle, toe angle	Little or none
Total $s_1 + s_2$ distance, caster mass, total mass and inertia	Moderate
Center of gravity position, caster trail distance, caster pin friction, forward speed	Very significant

question of how much the forward speed might be increased is addressed in the final section of this paper.

In addition to the parameters discussed thus far, several other design parameters were considered as part of this study. These included: mass and inertia properties, tire selection, camber angle, and toe angle. It was found that altering these parameters did not yield results significantly different than the yaw velocity curve corresponding to the assumed reference case. For this reason, these parameters are not considered in this report. The reader is referred to reference (2) for a more detailed discussion of the simulation results for these parameters.

CONCLUSIONS

There are several interesting conclusions that can be drawn from the simulation results presented. The general effect of varying different design parameters on the directional instability of manual rear caster wheelchairs is summarized in **Table 2**.

Along with the summary shown in **Table 2**, several other important conclusions are:

1. The directional instability of rear caster wheelchairs is strongly linked to the fact that the caster wheels are almost completely free to pivot. Unless some type of steering mechanism or locking device is implemented, manual rear caster wheelchairs will always be inherently directionally unstable, even at fairly low forward speeds.

2. Because friction at the caster pins reduces the tendency of the casters to pivot, increased caster pin friction significantly reduces a wheelchair's directional instability. The amount of friction can generally be varied by tightening or loosening the caster pin bolts. From a directional stability point of view, the caster friction should be adjusted to the maximum tolerable level. This tolerable level can be determined by trial and error.

3. Directional handling characteristics can be greatly improved by moving the front wheels toward the user as much as possible. At the same time, the distance from the user to the caster pins should be made as large as possible. These geometric considerations will minimize the front axle to center of gravity distance, s_1, while at the same time maximizing the total distance $s_1 + s_2$.

4. Caster trail distance should be reduced as much as possible, but not so much as to induce caster shimmy problems. Caster trails of 5 or 6 cm seem to be feasible. Conclusions 3 and 4 are discussed further in the Appendix.

5. Modifying secondary design variables such as camber angle, wheelchair width, or center of gravity height does not seem to have a significant effect on wheelchair directional stability. Some studies have noted that cambering the main wheels has a stabilizing effect (13). The results of simulation tests in this study indicate that this effect is negligible for typical manual wheelchairs. This is due to the fact that lateral cambering forces are small in comparison to the lateral forces on a rolling tire that result from a nonzero slip angle. Also, if each wheelchair tire is cambered by the same amount, the lateral cambering forces on each wheel will tend to offset each other.

6. The degree of directional instability associated with a particular rear caster wheelchair is highly dependent upon forward speed. It is recommended that manufacturers of rear caster wheelchairs warn users to avoid uneven ground or sharp inclines. This is particularly true for new users of rear caster wheelchairs or users who normally use their wheelchairs indoors only. Even a moderate incline may produce unsafe forward speeds, especially if the user has slightly impaired motor skills.

Journal of Rehabilitation Research and Development Vol. 25 No. 3 Summer 1988

APPENDIX

DESIGN RECOMMENDATIONS

Based upon the simulation results of this study, it is concluded that forward speed, center of gravity position, caster trail distance, and caster pin friction have dominant effects on the directional instability of rear caster wheelchairs. As a result, the options for improving directional instability are fairly limited for manual rear caster wheelchairs. Nevertheless, this section will add support to the conclusion that some significant improvement is possible.

The purpose is to help quantify the amount of improvement in directional control that might be obtained by incorporating design changes based on the conclusions of the simulation results. Specifically, with such design changes in place, how much faster can a modified wheelchair travel before exhibiting the same degree of directional instability as the wheelchair shown in **Figure 1**?

The simulation results presented suggest that the directional instability of the wheelchair used as the starting point for this study (see **Figure 1**) can be reduced. One can observe from **Figure 1** that the front axle of this wheelchair is located nearly as far forward as physically possible. This results in an unnecessarily large value of s_1. Placing the front wheels this far forward not only increases directional instability, it also makes it more difficult for the user to reach the handrims and propel the wheelchair.

The measured caster trail distance for the wheelchair in **Figure 1** was 8.0 cm. After measuring the caster trail distance for several other manual wheelchairs, it was concluded that the value of 8.0 cm was quite large. In fact, very few wheelchairs could be found with values of w greater than 8.0 cm.

In order to determine how much directional instability might be reduced by altering the parameters discussed in the last section, a revised wheelchair design was considered. The geometric dimensions were modified in accordance with the trends illustrated in **Figure 10** and **Figure 11**. The caster trail distance was reduced from 8.0 cm to 6.0 cm. The front wheel axle was moved back to reduce the axle to center of gravity distance from 34.5 cm to 24.5 cm. Dimensional changes incorporated in this modified design simulation are shown in **Figure 13b**.

It is noted that the total front wheel to caster pin distance, $s_1 + s_2$, was reduced by 5.0 cm, even though the front wheels were moved 10 cm toward the center of gravity. This was done simply by extending the caster pins behind the wheelchair as shown in **Figure 13b**. It is found that larger values of the total distance $s_1 + s_2$ also correspond to improved directional stability characteristics (2). Thus, it is desirable to keep this distance as large as possible, even though the front wheels are moved back.

With these design changes, the revised wheelchair will exhibit less directional instability. Recall that the original wheelchair (**Figure 1**) was assumed to exhibit uncontrollable directional stability at forward speeds greater than .75 m/sec. This corresponds to the assumed reference case described earlier for an initial lateral impulse of 4 N-sec. Several simulation tests were done to determine how much faster the revised wheelchair could travel before exhibiting the same degree of instability as the original design.

The results of these simulations are shown in **Figure 14**. Here, the assumed reference case curve associated with the original design is shown. **Figure 14** shows that for a forward speed of 1.1 m/sec, the revised design wheelchair is slightly more stable than the original design. However, when the speed is increased to 1.15 m/sec, the new design is less stable than the original. The sensitivity of yaw velocity response to small changes in forward speed is again apparent.

The major point of **Figure 14** is that the revised wheelchair can travel approximately 0.35 m/sec (0.8 mph) faster than the original design before displaying approximately the same directional instability. This is an increase in controllable forward speed of 46 percent over the assumed controllable speed of 0.75 m/sec for the original design, a significant improvement.

Thus far, it has been assumed that the frictional moments at the caster pins for the revised design are unchanged from the original. The value of M_f for the assumed reference case was 0.10 N-m. Increasing this value should also improve directional stability and allow for larger controllable speeds. **Figure 15** shows the effect of increasing or decreasing the friction at the caster pins by 50 percent. In **Figure 15**, the 3 curves shown are assumed to represent

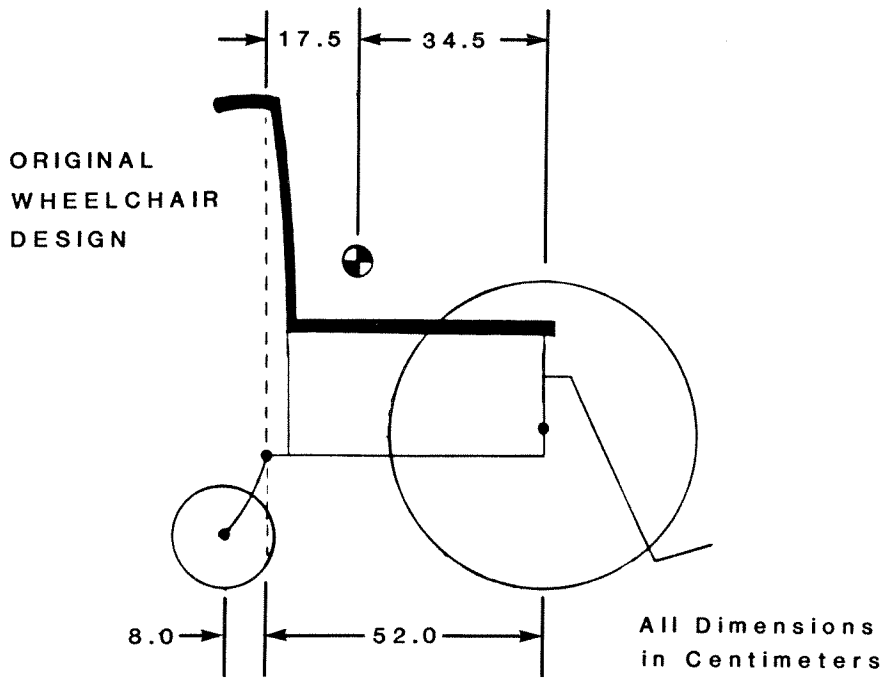

Figure 13a.
Original wheelchair design.

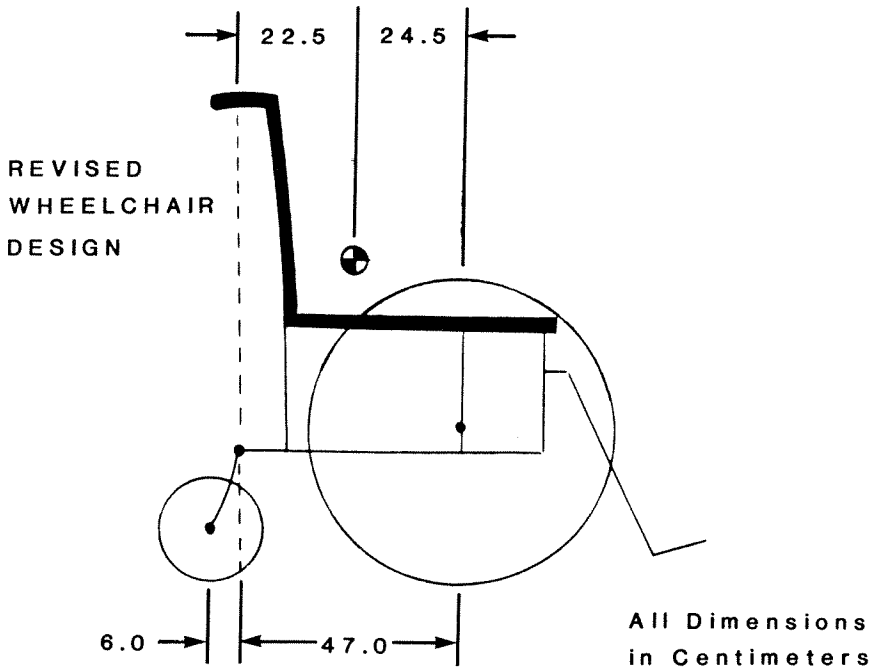

Figure 13b.
Revised wheelchair design.

Journal of Rehabilitation Research and Development Vol. 25 No. 3 Summer 1988

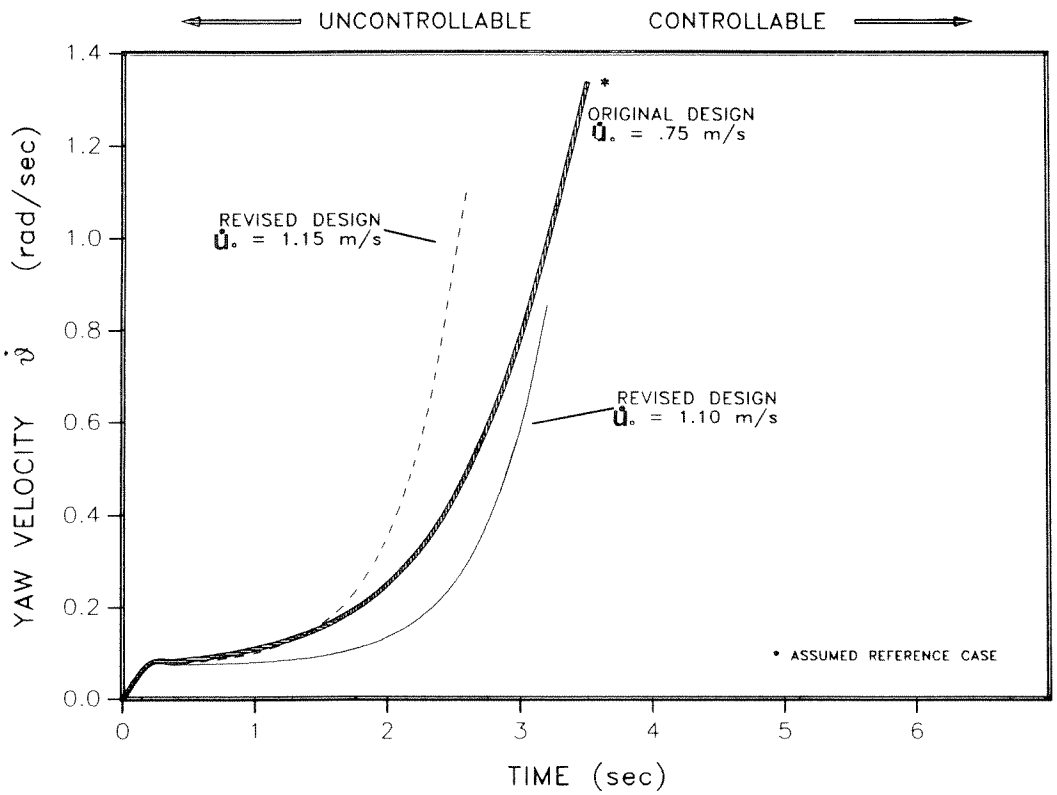

Figure 14.
Increase in controllable speed resulting from geometric design changes.

approximately the same degree of directional instability. The effect on allowable forward speed that results from decreasing or increasing caster friction is significant.

In **Figure 14**, it was shown that the modified wheelchair could travel at a speed of 1.1 m/sec before approaching the uncontrollable state. With the friction at the caster pins cut in half, this speed becomes 0.65 m/sec, a decrease of 41 percent. Similarly, if the caster friction is doubled, the allowable forward speed increases to 1.65 m/sec. This is an increase of 50 percent over the value of 1.1 m/sec.

Figure 15 indicates that directional instability is roughly proportional to the amount of friction at the caster pins. This is true in the sense that doubling the amount of caster pin friction will approximately double the speed at which a wheelchair can travel before exhibiting the same amount of directional instability. Of course, the reader is reminded that these conclusions only apply for the initial lateral disturbance that has been assumed throughout this paper (4 N-sec). Obviously, a wheelchair subjected to a more severe disturbance could become uncontrollable at speeds lower than those given in **Figure 14** and **Figure 15**.

Although the work presented in this paper was derived from data collected for a manual rear caster wheelchair, the basic conclusions should be applicable to rear caster electric wheelchairs as well. The goal of future work will be to extend the study to include electric wheelchairs. A paper on controls for a rear caster electric wheelchair has been presented by Moore (8).

It is easy to demonstrate the general characteristics of directional stability for any wheelchair by letting it coast down hill. With the casters in front, the chair is stable; but with the casters in the rear, the chair will not coast far before it spins off course. It is also simple to demonstrate that tightening the caster nut to increase the castering friction will improve the coasting performance of a rear-castered wheelchair. We have not attempted to experimentally verify the predictions of the analysis in a quantitative way at this time. Further testing is planned at a later date.

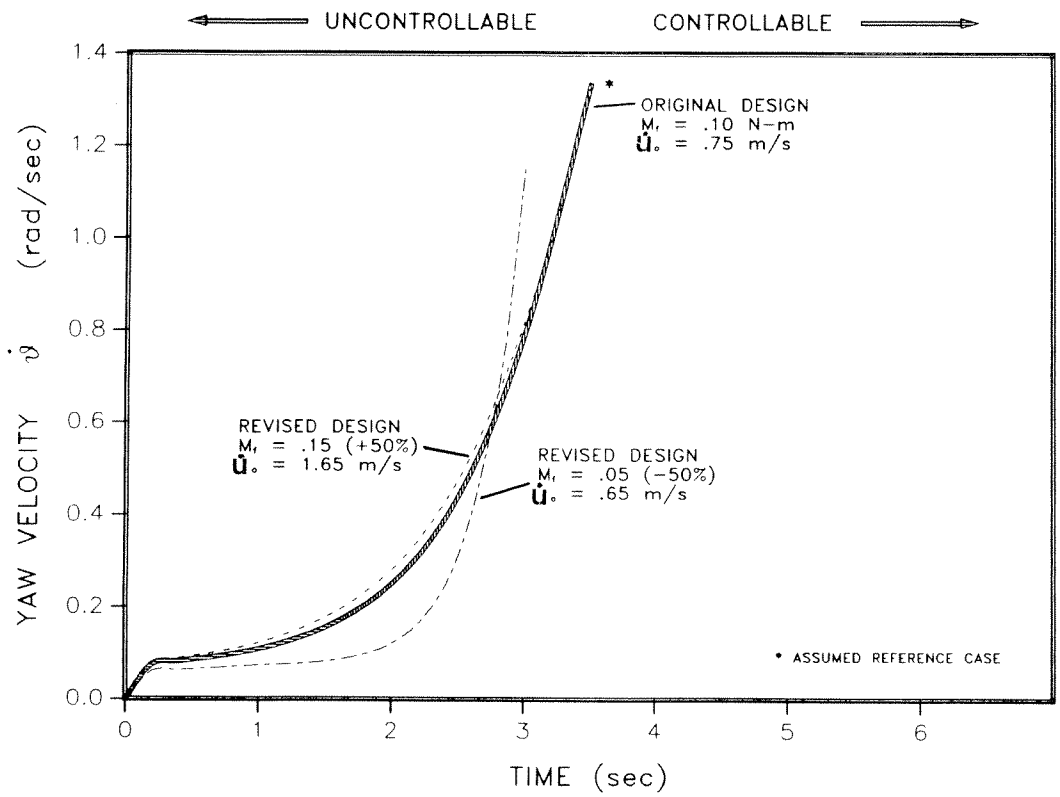

Figure 15.
The effect of increasing or decreasing caster friction on controllable speed.

NOMENCLATURE

A	ground contact point for left* caster wheel
B	ground contact point for right caster wheel
D	ground contact point for left front tire
d_1	lateral distance from c.g. to left front wheel, m
d_2	lateral distance from c.g. to right front wheel, m
E	ground contact point for right front tire
F_{AX}	longitudinal force on left caster wheel, N
F_{AY}	lateral force on left caster wheel, N
F_{BX}	longitudinal force on right caster wheel, N
F_{BY}	lateral force on right caster wheel, N
F_{DX}	longitudinal force on left front wheel, N
F_{DY}	lateral force on left front wheel, N
F_{EX}	longitudinal force on right front wheel, N
F_{EY}	lateral force on right front wheel, N
F_x	longitudinal or tractive force on rolling tire, N
F_y	lateral force on rolling tire, N
F_z	normal force on tire, N
I_z	wheelchair-user mass moment of inertia about vertical axis passing through center of gravity, kg-m^2
I_{zp}	mass moment of inertia of caster wheel about vertical axis passing through caster pin, kg-m^2
M	total moment exerted on wheelchair-user, N-m
m	total mass of wheelchair-user, kg
m_c	mass of individual caster wheel assemblies, kg
M_f	frictional moment at caster pin, N-m
M_x	overturning moment on rolling tire, N-m
M_y	rolling resistance moment on rolling tire, N-m
M_z	self-aligning torque on rolling tire, N-m
P_a	point which locates left caster wheel pin
P_b	point which locates right caster wheel pin
s_1	longitudinal distance from front wheels to c.g., m
s_2	longitudinal distance from caster pins to c.g., m
t_1	lateral distance from c.g. to left caster pin, m
t_2	lateral distance from c.g. to right caster pin, m
u	displacement directed along body fixed x axis, m
$\dot{u}$	velocity in direction of body fixed x axis, m/sec
$\ddot{u}$	acceleration in direction of body fixed x axis, m/sec^2
v	displacement directed along body fixed y axis, m
$\dot{v}$	velocity in direction of body fixed y axis, m/sec
$\ddot{v}$	acceleration in direction of body fixed y axis, m/sec^2

*Note that terms such as front, rear, left, or right refer to a rear caster wheelchair.

(continued on next page)

w caster trail distance, from contact point to caster pin, m

w_1 distance from caster pin to caster center of gravity, m

α slip angle of rolling tire, rad or deg

β angle between right caster wheel and x body axis, rad or deg

η angle between left caster wheel and x body axis, rad or deg

Θ angular orientation of wheelchair-user, rad or deg

$\dot{\Theta}$ angular velocity (yaw velocity) of wheelchair-user, rad/sec

$\ddot{\Theta}$ angular acceleration of wheelchair-user, rad/sec^2

REFERENCES

1. **Clark SK:** *Mechanics of pneumatic tires.* U.S. Department of Transportation Document HS-012 573, 1971.
2. **Collins TJ:** Analysis of parameters related to the directional instability of rear caster wheelchairs. Master's thesis, University of Virginia, Mechanical Engineering Department, 1987.
3. **Dugoff H, Facher PS, Segel L:** An analysis of tire traction properties and their influence on vehicle dynamic performance. *Society of Automotive Engineers Paper 700377,* 1970.
4. **Ellis JR:** *Vehicle Dynamics.* London: London Business Books, 1969.
5. **Kauzlarich JJ, Bruning T, Thacker JF:** Wheelchair caster shimmy and turning resistance. *J Rehabil Res Dev* 20(2):15-29, 1984.
6. **Kauzlarich JJ, Thacker JG:** Rear caster wheelchair directional instability. In *Proceedings of the 8th Annual Conference on Rehabilitation Engineering,* 78-80. Memphis, TN, 1985.
7. **Kauzlarich JJ, Thacker JG:** Wheelchair tire rolling resistance and fatigue. *J Rehabil Res Dev* 22(3):25-41, 1985.
8. **Moore JW:** Wheelchair directional control 1. In *Conference Record of 20th Asilomar Conference on Signals, Systems and Computers,* 510-512. The Computer Society of IEEE, 1986.
9. **Nordeen DL:** Analysis of tire lateral forces and interpretation of experimental tire data. *Society of Automotive Engineers Paper* 670173, 1967.
10. **Smiley RF, Horne WB:** Mechanical Properties of Pneumatic Tires with Special Reference to Modern Aircraft Tires, *NACA Technical Memo 4110,* Washington, 1958.
11. **Taborek JJ:** *Mechanics of vehicles.* U.S. Department of Transportation, Penton Education Division, Document HS-014 285, 1957.
12. **US Department of Transportation:** *Motor Vehicle Performance: Measurement and Prediction.* Document HS-015 952, 1974.
13. **Weege Von RD:** Technical requirements for an active engagement in sport in a wheelchair. *J Orthop Technol* 395-402, January 1985.
14. **Wong JY:** *Theory of Ground Vehicles.* New York: John Wiley and Sons, 1978.