Department of Veterans Affairs

Journal of Rehabilitation Research and Development Vol. 29 No. 1, 1992
Pages 1–8

# Design and evaluation of a sensory feedback system that provides grasping pressure in a myoelectric hand

**Patrick E. Patterson, PhD; Judd A. Katz, EdD**
*Iowa State University, Ames, IA 50011; Auburn University at Montgomery, Montgomery, AL 36117*

**Abstract**—Providing accurate sensory information to the individual with a myoelectric limb is of great importance for improving device use in a wide variety of tasks. A number of feedback systems presently being investigated rely on either vibrotactile or electrotactile skin stimulation, which does not provide sensory patterns similar to those in a natural grasping hand. A prototype system was developed to enhance sensory information transfer by using a technique in which the feedback modality (pressure) was the same as the grasping pressure. The present study compared the developed system (pressure) with vibrotactile feedback, vision, and compounds of these three modes. It was found that the pressure-pressure concept reduced grasping pressure replication errors and error variability.

**Key words:** *electrotactile/vibrotactile skin stimulation, grasping pressure, limb prostheses, myoelectric hand, sensory feedback system.*

## INTRODUCTION

Childress, referring to the state of the art in closed-loop control in upper limb prostheses stated:

At the present time relatively few restorative techniques used in clinical practice have closed-loop controllers purposely designed within them. Loops are closed by the human operator through vision and incidental simulation (audition, socket pressure, harness, etc.), but not often through design intention (1).

Differences of opinion regarding the Childress comments still exist. Solomonow, Lyman, and Freedy have commented that, in the research laboratory, "A great deal of progress has been made through the various ASAS's (artificial sensory augmentation systems) toward sensory recovery for the disabled; however, limitation in both quantity and quality of information transmission has become evident, and more complex stimulation techniques need to be sought" (2). Yet, Herberts and Körner have indicated that "development of a system for sensory feedback in hand prosthesis has not been as successful as that of modern prosthesis control systems" (3). The path leading from the research laboratory to actual use in clinical practice is still filled with obstacles.

When one reviews the literature in closed-loop feedback, much activity and diversity in both systems and philosophies regarding feedback design are obvious. Some researchers address logistical issues, miniaturization, power packages, and simplicity of support systems in their designs, while others address physiologically-compatible stimulation and correlated relationships between hand prostheses and stimulus generators in the design and construction of feedback systems.

The goals of the present study were to (*a*) consider the research activity that has occurred over the last 20 years; and, (*b*) design and evaluate a closed-loop upper limb system that was intended to provide the most reasonable stimulus feedback message to the body. The investigators viewed the solution to the feedback issue as a three-fold problem: 1) the feedback stimulus must be correlated to the activity of the hand, that is, feedback stimulation must vary directly with the grip force of the terminal appliance. (Childress

Address all correspondence and requests for reprints to: Professor P.E. Patterson, Department of Industrial Engineering and the Biomedical Engineering Program, Iowa State University, Ames, IA 50011.

DOI:10.1682/JRRD.1992.01.0001

Journal of Rehabilitation Research and Development Vol. 29 No. 1 Winter 1992

described how this concept was incorporated at a rudimentary level for a hand prosthesis patent in 1916 by Rosset using pneumatic transmission of pressure from finger pressure pads) (1); 2) the feedback stimulus should replicate or fit the same mode of stimulation as the natural limb (pressure sensitivity); and, 3) the design of a task would allow development of a precise evaluation methodology so that conclusions could be reached on the accuracy and feasibility of a number of feedback systems.

Although correlation and stimulus replication are found in the research literature, they have seldom been investigated together. Sueda and Tamura believed that a feedback sensory device was more important for a powered prosthesis than for a cable-controlled device (4). They mounted strain gauges at the base of a split hook that controlled the presentation of correlated vibratory stimulation to the user. Their rationale for increased feedback was to increase the control of an artificial arm by means of signals transmitted to the user. Using their system, they indicated that it was possible to determine the thickness of a grasped object with the eyes closed.

If vision cannot be used, correlated feedback via another source of stimulation is desirable. Scott used a correlated feedback stimulus related to the amount of pressure generated by an artificial hand (5), but the feedback stimulus selected was electrocutaneous, which does not fit the natural mode of pressure. Salisbury and Colman employed an interesting concept of correlation where a slippage indicator was attached to an artificial hand (6). The indicator sensed shear force and switched on a hand motor, which then applied more pressure on the object by closing the hand. The feedback loop was limited to the internal mechanical structure of the prosthesis and did not signal the subject. Beeker, During, and den Hertog used barium tetanite crystals in the thumb of a prosthetic hand that became pressure-sensitive during gripping, with the subject receiving electrocutaneous stimulation as feedback (7). The feedback appears to have been dichotomous rather than correlated. (The subject was informed that hand contact had been made, but not the magnitude of the pressure being exerted by the hand.) Shannon investigated electrical and vibrating feedback stimuli and concluded that vibration was more appropriate than electrical stimuli (8). He concluded that when upper levels of electrical stimulation are set or when two electrical stimuli receivers are activated, subjects describe the sensation as painful. Shannon's study indicates an attempt to search for a more appropriate stimulus. In 1979, Shannon integrated a correlated feedback stimulus as it is related to pinchforce in the hand, but the feedback stimulus was electrocutaneous (9).

Prior and Lyman used electrocutaneous stimulation that was correlated to the position of the hand (10). The authors presented an eight-task research program to include multiple degree of freedom feedback systems, providing the subject with information on grasp force along with hand and elbow positions for above-elbow amputees. Grip force and hand position were sensed by transducers mounted in the hands. (Pressure may have been determined by hand position rather than force on an object.) Prior and Lyman used an interesting block-grasping task to evaluate the discriminatory precision of the feedback stimulus (10).

Solomonow, Lyman, and Freedy (2) did extensive work on testing various ASAS. They presented a two-point discrimination system that could provide input for missing fingertip pressure, and elbow positions that could be used in an above-elbow prosthesis. The authors examined three variables: spatial (position of the electrode on different body sites or electrode interdistance); temporal (the relationship of the timing of one impulse to another); and frequency (a series of slower pulses in one electrode versus a series of faster pulses in the second electrode). Their work also provides a mapping procedure to determine efficient areas for feedback stimulus sites.

Schmidl used a micropotentiometer in the thumb joint of a prosthetic hand in which the output voltage was controlled by the position of the micropotentiometer. Schmidl said, "As the hand seizes an object, the output voltage increases in proportion to the pressure that the thumb exerts on the object" (11). The feedback was electrocutaneous stimulation proportional to position of the hand.

Almström, Anani, Herberts, and Körner investigated the problem of electrode containment in the prosthetic socket (12). They questioned whether the EMG pick-up electrodes would be hampered by the electrical activity of the feedback electrodes. If the pick-up electrodes are placed too close together, the problem of neurological or muscle crosstalk can interfere with the control of the prosthesis.

Childress defined three types of signal flow in a prosthesis that were of interest to the investigators: type A was visual and auditory; type B was proprioceptive; and, type C dealt with the technical aspects of the prosthesis (1). Phillips indicated that the primary modalities used by sensory feedback systems are those of vision, audition, and touch (13). The investigators hypothesized that in order to produce a useful and successful feedback stimulus, two basic conditions must be met: 1) the feedback stimulus must correlate with the pinchforce of the prosthesis; and, 2) the feedback signal must fit the stimulus mode of the missing limb. Thus, the ideal feedback mechanism would gener-

ate correlated pressure—pressure that is related to the pinchforce of the prosthetic hand.

The concept of matching the feedback stimulus of the missing limb comes from conclusions of a long series of psychological experimentation dating back to the 1920s. The early experimental psychological researchers, Pavlov and Hovland, gave support to the constructs of equivalence of associability: "The premise of equivalence places a special premium on the investigation of arbitrarily related, as opposed to naturally occurring, events" (14). The early stimulus researchers believed that conditional relationships or attachments could be made with any pair of stimuli as long as they showed a contiguous relationship for an extensive number of conditioning trials. The concept of equivalence of associability is the approach taken by many of the contemporary biomedical researchers investigating feedback systems in prosthetic limbs.

Thorndike (15) became aware that arbitrarily related stimuli did not develop the strong relationship or connection that related tasks and stimuli develop. He hypothesized that a satisfying state of affairs (feedback system) tends to arouse a confirming reaction, and that if feedback is too irrelevant, it does not arouse a confirming reaction. Thorndike called the confirming reaction to a proper stimulus, "belongingness," indicating the possibility that equivalence of associability was an incorrect concept. Garcia and Koelling, Lawika, and Seligman are contemporary psychological researchers who have expanded belongingness into the "stimulus fittingness principle" (16,17,18).

The concept of extended physiological taction (EPT) was investigated in the recent research of Meek, Jacobsen, and Goulding (19). They indicated their work was based in part on the force-to-force feedback concept demonstrated by the Rosset patent application (1), and conceptually related to Simpson's Extended Physiological Proprioception (20), which refers to the ability of the individuals to extend proprioception beyond their actual limbs. "The EPT method has a one-to-one or extended correspondence of sensation to stimulation . . . the user would exactly feel the object that is grasped." Meek, *et al.*, were in agreement with the authors of this investigation in their review of feedback stimulation and feedback loops presently in use. They indicated that while vibrotactile and electrotactile stimulation were the most often used feedback modes, neither provides a one-to-one physiologically-compatible stimulation of the human senses (19). In short, these feedback modes do not provide the same stimulation effect as does natural grasping.

Meek, *et al.*, share a parallel point of view to the psychological concepts of belongingness and stimulus fit previously discussed. Although the authors of this study share basic physiological and psychological issues, there are technological differences between the two approaches. They incorporated a strain gauge on the fingers of the terminal appliance. A circuit connected the strain gauge to a force applicator (a motor-driven pinion pushed a rack up and down against the skin of the remaining part of the arm). An extensive series of grasping tasks were then conducted to evaluate the effectiveness of the EPT system, resulting in what the authors felt was improved user performance (19).

The investigators in this research specifically used the stimulus fittingness principle in the theory and design of their feedback system for a myoelectric prosthetic hand. The feedback stimulus was correlated pressure (pressure in the cuff varied proportionally to pressure in the gripper) returned to the body via a pressure cuff. By incorporating the stimulus fittingness principle, the investigators hypothesized that learning precise use of a prosthetic hand could best be accomplished by providing a stimulus that matched that of the natural hand—the stimulus of pressure. When grasping an object, a subject does not expect noise, vibration, or electrostimulation; the subject expects the natural stimulus of pressure. The following procedure represents a comparison of feedback stimuli used by the investigators to evaluate their hypothesis.

## METHOD

### Apparatus

**Figure 1** presents a block diagram of the experimental systems and the action sequence:

1. Control circuitry for the receipt and conditioning of EMG signals from the biceps and triceps. (The outputs of these two sets of electrodes were summed with the resulting differential indicating whether to increase [+] or reduce [−] grip pressure.)
2. A bidirectional motor that opened or closed a robotic hand in response to the EMG differential.
3. A Microbot MiniMover-5®, six-degree-of-freedom robotic arm, in which only the hand motor (number 2 above) was controlled in this study (all other degrees of freedom were fixed).
4. The pressure sensing circuitry on the gripper "fingers" consisting of a polyvinylidene fluoride piezoelectric film that generated a signal (pressure variations) which was translated into a corresponding voltage.
5. A single-board FORTH microcomputer for datalogging and transmission to the appropriate feedback device using the amplified voltage:

Journal of Rehabilitation Research and Development Vol. 29 No. 1 Winter 1992

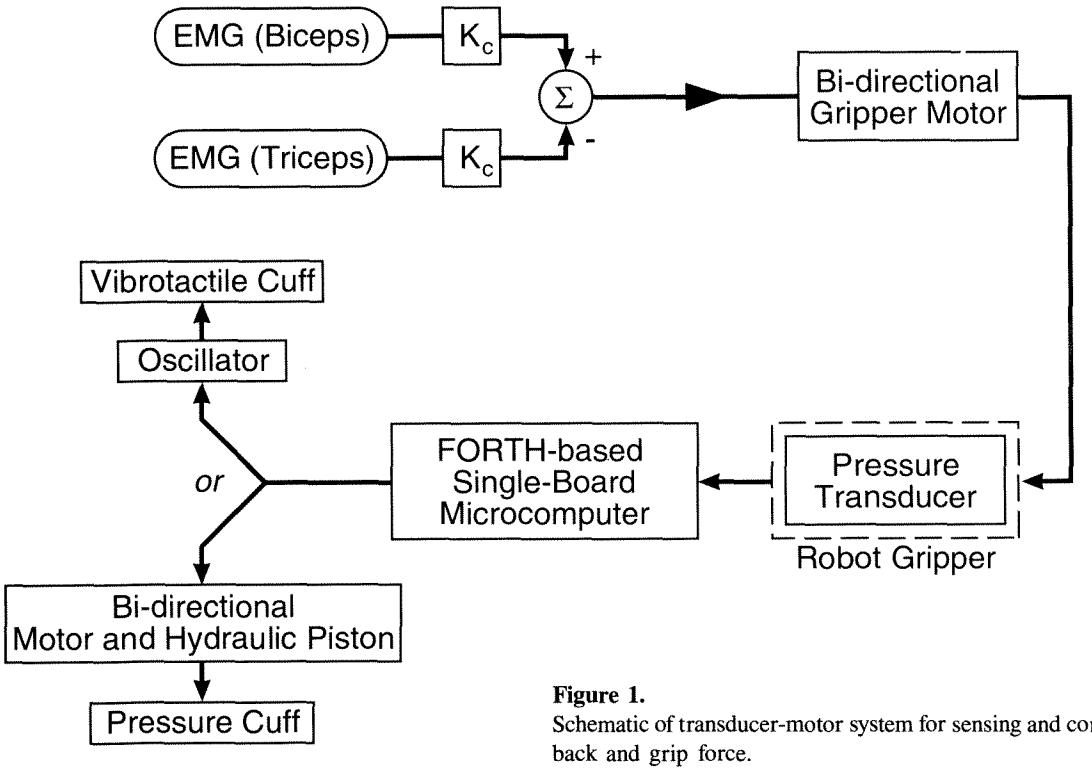


**Figure 1.**
Schematic of transducer-motor system for sensing and controlling feedback and grip force.

*a.* either to a pressure cuff (The polarity and magnitude of the signal drove a second bidirectional motor. The motor drove a small hydraulic piston that in turn exerted a hydraulic pressure in a pressure cuff around the upper arm.)

*b.* or to a vibrotactile cuff (The polarity and magnitude of the signal drove an oscillator for a miniature speaker imbedded in a cuff around the upper arm.)

Both cuff systems developed feedback responses that were proportional to the applied voltage.

## Procedure

Twenty-five nonhandicapped university students, ages 18-25, were selected from a group of volunteers and randomly assigned to one of five feedback groups:

- Pressure only
- Vibration only
- Vision only
- Stimulus compound of pressure and vision
- Stimulus compound of vibration and vision.

Since both Childress and Phillips have indicated the value of vision (13,21), a multiple stimulus feedback condition was included in this study by adding and removing visual feedback from the stimuli of pressure and vibration.

The experimental area (**Figure 2**) consisted of a subject sitting at a 3 ft × 8 ft table that supported the equipment. Each subject sat at the end of the table and, depending on the assigned feedback group, was fitted with a stimulus cuff on the upper left arm that returned either the stimulus of vibration or pressure (subjects in the vision-only group did not wear a cuff). The table contained the control devices for vibration and pressure circuitry, a single-board computer, and a movable partition. By removing the partition, the vibration or pressure could be presented in a stimulus compound with vision by providing a view of the arm and gripper. Leaving the partition in place restricted the view of the arm and gripper, eliminated visual cues (i.e., deformation of the gripper fingers), and allowed vibration or pressure to be presented alone.

All subjects had the EMG circuitry affixed to their right arm for controlling the movement of the gripper hand on the end of the MiniMover robotic arm. The hand consisted of two industrial "fingers" that closed or pinched together when powered by an electric motor, giving the hand prehensile action. The closing velocity of the gripper was held constant, independent of the stimulus magnitude.

## Pre-experimental trials

Each of the 25 subjects performed 50 familiarization trials within their assigned feedback mode. A wooden block

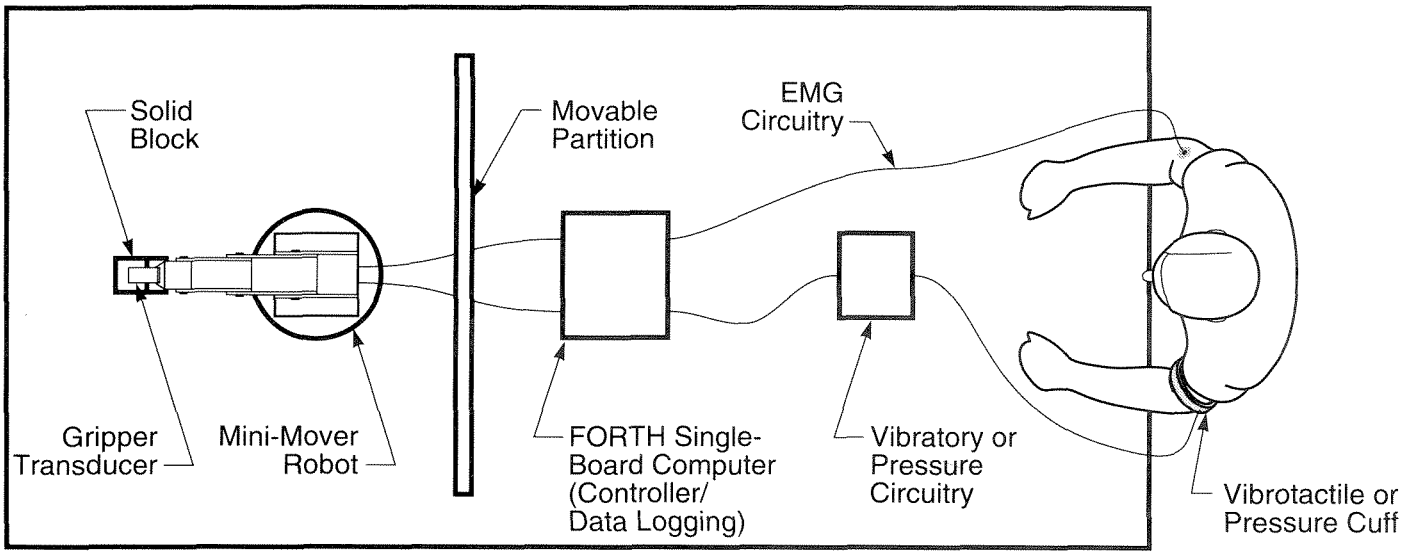


**Figure 2.**
Top view of the experimental area showing a subject in relation to the gripper hand and the solid block that the hand grasps. The illustrated subject is fitted with a cuff for vibration or pressure feedback with the movable partition in place to block vision of the gripper hand.

was placed between the fingers of the gripper hand and the subject was asked to grasp and squeeze the block by activating the EMG circuit. As the block was being squeezed by the robotic fingers, the investigator said, "Stop," logged the data value at that point in time on the FORTH microcomputer, and instructed the subject to relax. By using the stop command, the random pressure that was generated became the reference point for the replication trial. The experimenters' purpose for this procedure was to have the subject replicate a varying self-generated stimulus. This procedure also prevented the subject from simply maximizing the reference pressure and then generating the same maximum pressure during the replication (test) trial and thereby artificially inflating accuracy. In addition to the feedback condition of his assigned group, the subject received verbal knowledge of results as to the magnitude of pressure exerted by the gripper; the subject would then try to replicate that pressure. The pre-experimental trials allowed the subjects to practice opening and closing the gripper hand via the EMG transducer and to match their specific feedback system with a verbal report of the amount of pressure being exerted on the block.

## Experimental trials

For the test, each subject performed 10 gripping trials on the same wooden block in the following sequence. No time restrictions were placed on the subject for responding; the bidirectional motor allowed for the correction of undershoot and overshoot in a response.

*Reference trials*

The reference and replication trials proceeded as in the pre-experimental trials with the exception of the presentation of verbal feedback. Subjects were not given verbal feedback as to the amount of pressure because they were in the pre-experimental trials but instead, received only the feedback stimulus specified by their assigned group (pressure, vibration, vision, pressure and vision, or vibration and vision). The subject then experienced an unfilled wait of 5 seconds before being asked to replicate the pressure.

*Replication trial*

After the 5-second waiting period, the subject was asked to match the pressure in the reference trial by activating the EMG system. The subject controlled the response by monitoring the feedback system provided to the assigned group. The subject said, "Match" to indicate when it was felt a match with the reference value was made; this point was marked by the investigator on the FORTH microprocessor.

A filled delay period of 30 seconds was inserted between each set of reference-replication trials; the filled delay consisted of a counting task. This was done to reduce any autocorrelation effect which might be present. Each subject was required to participate in 10 sets of reference-replication trials; error levels were recorded, indicating to what extent the subjects were able to duplicate their reference levels.

Journal of Rehabilitation Research and Development Vol. 29 No. 1 Winter 1992

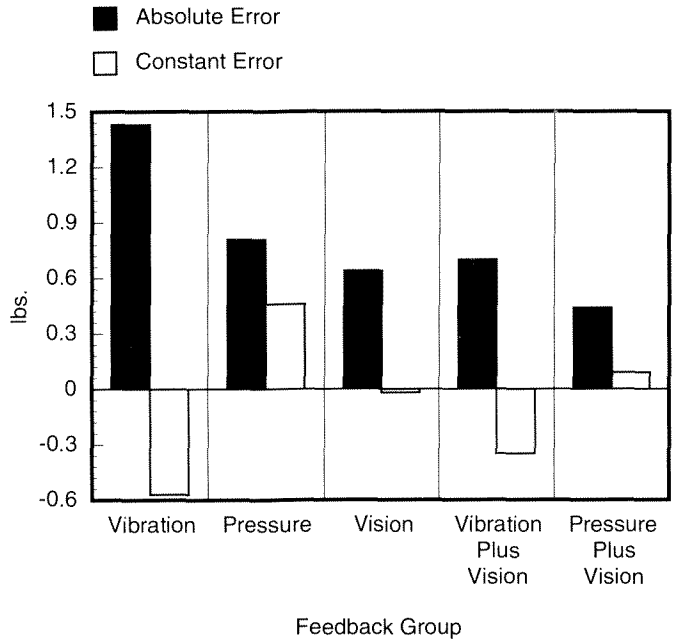


**Figure 3.**
The difference in absolute and constant error levels among the five groups.

## RESULTS

Three different measures were used to interpret the results: 1) absolute error, defined as the magnitude of the error regardless of the sign, that is, overestimates (+) or underestimates (−); 2) constant error, defined as signed error (this indicates bias in the response, i.e., the tendency to overestimate or underestimate the response); and, 3) relative error, defined as the ratio of response error to the reference load—this measure allowed for comparisons between reference loads as these values were not fixed in this study (subject selected reference values).

**Figure 3** shows the mean absolute and constant error values for each of the feedback modes. Note that the average response for the vision-only, vibration-plus-vision, and vibration-only conditions was typically an underestimate; that is, the replication trial value tended to be less than the reference value. In contrast, pressure-alone and pressure-plus-vision produced values that were biased in the overestimate direction; the replication value tended to be greater than that of the reference trial. In conjunction with these observations, the absolute error was greatest for the two supplemental feedback modes (pressure, vibration), while the presence of vision in a compound enhanced the accuracy of these same feedback stimuli.

**Figure 4** depicts the effects of the feedback conditions on relative error. As was found with absolute error, the conditions of pressure-alone or vibration-alone gave the greatest error ratio per response. The three conditions involving vision had significantly lower relative error, with the pressure-plus-vision being lowest on this measure. Observe on this chart that while the vibration-plus-vision relative error was greater than that of the pressure-plus-vision condition and was approximately equal to the vision-alone condition, the vibration-plus-vision condition had the smallest response variability.

## DISCUSSION

The results of this investigation tended to confirm the initial hypothesis that the mode of feedback stimulation generated by a grasping prosthetic hand should attempt to replicate the stimulation that one receives from the grip of a natural hand. The data support the findings of Meek *et al.*, as well as the observations of Childress and Phillips (13,19,21). Vision is a natural stimulus that enhances the effectiveness of a feedback stimulus and may derive from the fact that most of our motor tasks have become reliant on subtle visual cues. Levin and Haber, in their research on estimating distances, discovered that subjects were more accurate in judging radial distance (two inline objects in front of them) than in judging horizontal distance (two objects on the horizon in front of them) (22).

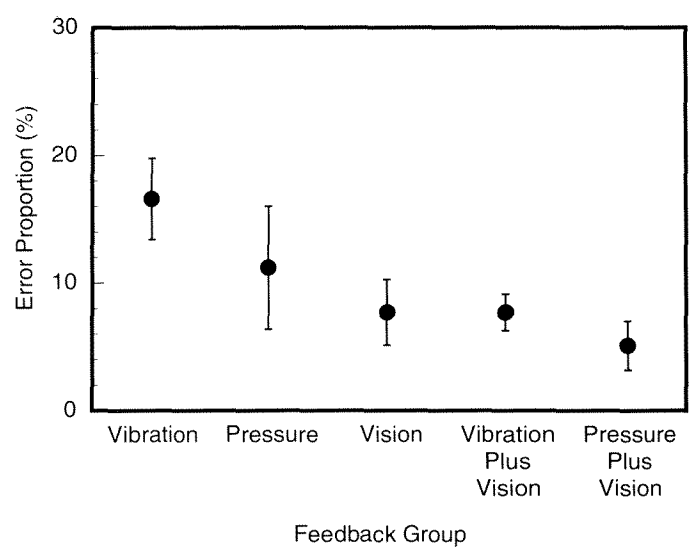


**Figure 4.**
Relative error: Error magnitude as a proportion of the reference trial (i.e., error/reference force).

Part of Levin and Haber's rationale for greater accuracy in judging radial distance was the change in visual texture of the ground when objects radiate outward. It is a subtle difference, yet is used in making more accurate distance discrimination. An analogy could be made for estimating pressure; additional visual cues from a gripping hand, even an artificial one, provide the subject with just enough information to make a more accurate tactile discrimination. Indeed, it appears that the primary advantage gained from supplemental feedback is that of reducing the variability of responses.

## FUTURE DIRECTIONS

The results of the present study have implications not only for improving sensory feedback information to the user of a prosthesis, but also for systems involving the teleoperation of remote devices where such feedback would be beneficial. The results, while lending additional weight to the argument for using correlated feedback to enhance any sensory system relating pressure in a remote device, raise these additional questions which must be further addressed to assess the practical value of the technique:

- What effects might stimulus accommodation have on accuracy and long-term use? The present study used relative information, and so did not specifically address this issue.
- Which method would reduce learning time for first-time users; what is the effect of periods of nonuse on retention of accuracy?

and, perhaps the most critical questions of all,

- Can nonfitting or non-EPT feedback stimulation actually interfere with learning the precise use of a prosthesis?
- Is the information gained from receiving additional feedback worth the increase in device sophistication?

Additional research on these and related areas, coupled with philosophical and psychological discussions, are needed to answer these questions.

## REFERENCES

1. Childress DS. Closed-loop control in prosthetic systems: historical perspective. Ann Biomed Eng 1980;8:293-303.
2. Solomonow M, Lyman J, Freedy A. Electrotactile two-point discrimination as a function of frequency, body site, laterality, and stimulation codes. Ann Biomed Eng 1977;5:47-60.
3. Herberts P, Korner L. Ideas on sensory feedback in hand prostheses. Prosthet Orthot Int 1979;3:157-162.
4. Sueda 0, Tamura H. Sensory device for the artificial arm. In: Proceedings of the Eighth International Conference on Medical and Biological Engineering, Chicago, 1969. Session 5-9.
5. Scott RN, Brittain RH, Caldwell RR, Cameron AB, Dunfield VA. Sensory-feedback system compatible with myoelectric control. Med Biol Eng Comput 1980;18:65-9.
6. Salisbury LS, Colman AB. A mechanical hand with automatic proportional control of prehension. Med Biol Eng 1967;5:505-11.
7. Beeker TW, During J, den Hertog A. Artificial touch in a hand-prosthesis. Med Biol Eng 1967;5:47-9.
8. Shannon GF. A comparison of alternative means of providing sensory feedback on upper limb prostheses. Med Biol Eng 1976; 14:289-294.
9. Shannon GF. A myoelectrically-controlled prosthesis with sensory feedback. Med Biol Eng Comput 1979;17:73-80.
10. Prior RE, Lyman J. Electrocutaneous feedback for artificial limbs summary progress report, February 1, 1974 through July 31, 1975. Bull Prosthet Res 1975;10-24:3-37.
11. Schmidl H. The importance of information feedback in prostheses for the upper limb. Prosthet Orthot Int 1977;1:21-4.
12. Almström C, Anani A, Herberts P, Körner L. Electrical stimulation and myoelectric control. A theoretical and applied study relevant to prosthesis sensory feedback. Med Biol Eng Comput 1981;19:645-53.
13. Phillips CA. Sensory feedback control of upper- and lower-extremity motor prosthesis. CRC Crit Rev Biomed Eng 1988; 16:105-140.
14. Sahakian WS. Learning: systems, models and theories. 2nd ed. Chicago: Rand McNally & Co., 1976.
15. Thorndike EL. The psychology of wants, interests and attitudes. New York: Appleton-Century, 1935.
16. Garcia J, Koelling R. Relation of cue to consequence in avoidance learning. Psychonom Sci 1966;4:123-4.

17. Lawicka W. The role of stimuli modality in successive discrimination and differentiation learning. Bull Polish Acad Sci 1964;12:35-8.
18. Seligman ME. On the generality of the laws of learning. Psychol Rev 1970;77:406-18.
19. Meek SG, Jacobsen SC, Goulding PP. Extended physiologic taction: design and evaluation of a proportional force feedback system. J Rehabil Res Dev 1989;26(3):53-62.
20. Simpson DC. The choice of control system for the multimovement prosthesis: extended physiological proprioception (EPP). In: Herberts P, Kadefors R, Magnusson R, Peterson I, eds. The control of upper-extremity prostheses and orthoses. Springfield, IL: Charles C. Thomas, 1974:146-50.
21. Childress DS. Powered limb prostheses: their clinical significance. IEEE Trans Biomed Eng BME 1973;20:200-7.
22. Levin CA, Haber RN. Degree of pan as a determiner of perceived inter-object distance [Dissertation]. Chicago: University of Chicago, 1989.